- Installation Instructions -

marquis FIREPLACE COLLECTION
BENTLEY

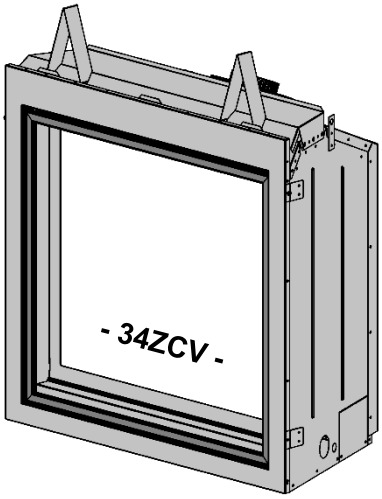

Intertek C#4000720

Model Numbers: ZCV34N, ZCV34NE, ZCV34NE2, ZCV34LP, ZCV34LPE, ZCV34LPE2
ZCV34NH, ZCV34NHE, ZCV34NHE2, ZCV34LPH, ZCV34LPHE, ZCV34LPHE2

Certified to: CSA/ANSI Z21.88:19 • CSA 2.33:19 and CSA2.17-2017

⚠ WARNING:
FIRE OR EXPLOSION HAZARD
Failure to follow safety warnings exactly could result in serious injury, death, or property damage.

-Do not store or use gasoline or other flammable vapors and liquids in the vicinity of this or any other appliance**.**

-WHAT TO DO IF YOU SMELL GAS

- Do not try to light any appliance.
- Do not touch any electrical switch; do not use any phone in your building.
- Leave the building immediately.
- Immediately call your gas supplier from a neighbor's phone. Follow the gas supplier's instructions.
- If you cannot reach your gas supplier, call the fire department

-Installation and service must be performed by a qualified installer, service agency or the gas supplier.

INSTALLER: Leave this manual with the appliance. **CONSUMER:** Retain this manual for future reference.

This appliance may be installed in an aftermarket, permanently located, manufactured home (USA only) or mobile home, where not prohibited by local codes.

This appliance is only for use with the type of gas indicated on the rating plate. This appliance is not convertible for use with other gases, unless a certified kit is used.

⚠ WARNING: do not operate this appliance without decorative glass embers on burner and media tray.

NOT FOR USE WITH SOLID FUEL

Kingsman Fireplaces maintains a program of continuous testing, refinement and improvements of all its products. Some aspect of units shown here may be changed at any time without notice or obligation.

A Division of R-Co. Inc. 2340 Logan Ave.
Winnipeg, Manitoba Canada R2R 2V3 Ph.: (204) 632-1962
Printed in Canada October 22, 2026 Part# 34ZCV-MAN19

IT IS THE RESPONSIBILITY OF THE HOME OWNER TO ENSURE THAT NO ONE TOUCHES A HOT APPLIANCE.

- If the barrier becomes damaged, the barrier shall be replaced with the manufacturer's barrier for this appliance.
- Any safety screen, guard, or barrier removed for servicing the appliance, must be replaced prior to operating the appliance.
- Children and adults should be alerted to the hazards of the high surface temperatures of this appliance and should stay away to avoid burns or ignition of clothing.
- Do not clean when the glass is hot.
- Young children should be carefully supervised when they are in the same room as the appliance. Toddlers, young children and others may be susceptible to accidental contact burns.
- A physical barrier is recommended if there are at risk individuals in the house. To restrict access to a fireplace or stove, install an adjustable safety gate to keep toddlers, young children and other at risk individuals out of the room and away from hot surfaces.
- Do not leave the fireplace remote control where it is accessible to children.



WARNING:

A HORIZONTAL VENT CERTIFIED GUARD (SAFETY CAGE) IS AVAILABLE WHEN REQUIRED BY LOCAL CODES.

SAFETY CAGES ARE AVAILABLE FOR ALL HORIZONTAL VENT TERMINATIONS. CHECK WITH YOUR DEALER.

- **TERMINATION CAP IS HOT!** Do not place flammable materials on or within 24 inches of termination caps.
- It is imperative that the vent termination be located observing the minimum clearances as shown in manual.
- There must not be any obstruction such as bushes, garden sheds, fences, decks or utility buildings within 24" from the front of the termination plate.
- Do not locate termination where excessive snow or ice build-up may occur. Be sure to check vent termination area after snow falls and clear to prevent accidental blockage of venting system. When using snow blowers, make sure snow is not directed towards vent termination area.
- Venting terminal shall not be recessed into a wall or siding.

ZCV34 Table of Contents

Hot Glass & Vent Termination Warnings..... 2
Table of Contents..... 3-4
Warnings, Installations and Operations - Installation Regulations..... 5
Installation Requirements for the Commonwealth of Massachusetts..... 6
Carbon Monoxide (CO) Detector..... 6
Pre-installation Questions and Answers / Operations and Maintenance Instructions..... 7
Fireplace Installations in Covered Outdoor Locations..... 8
Mobile Home/Manufactured Housing Installation..... 9

Installation & Framing

Framing Your Gas Fireplace..... 10
Stand-off and Nailing Tab Locations..... 10
Nailing Tab Guide..... 11
Venting in the Chase – Warning..... 12
Locating Your Appliance..... 13
Fireplace Dimensions..... 13

Non-Vented Chase VS Vented Chase - Choose Your Installation

Chase Options: Non-Vented / Vented / Vented with Recessed Front..... 14
Non-Vented Chase VS Vented Chase - Choose Your Installation..... 15
Vented Chase- **Removal of Vent Covers**..... 15

Framing: Non-Vented Chase

Framing Dimensions for Non-Vented Chase..... 16
Framing Dimensions for Non-Vented Chase Built Outside of Room (Doghouse)..... 17
Mantel Clearances for Non-Vented Chase..... 18
Clearance to Combustibles for Non-Vented Chase..... 19
Facing Requirements- for Non-Vented Chase..... 20

Framing: Vented Chase

Framing Dimensions for Vented Chase with V34EG -OR- V34EGS Grills..... 21
Framing Dimensions for Vented Chase for Vented Chase Built Outside of Room (Doghouse)..... 22
Framing Dimensions for Vented Chase with Open Top..... 23
Framing Dimensions - Recessed Vented Chase - V34EG / V34EGS Grills..... 24
Framing Dimensions - Recessed Vented Chase with Open Top..... 25
Mantel Clearances- for Vented Chase..... 26
Clearance to Combustibles for Vented Chase..... 27
Facing Requirements for Vented Chase..... 28
V34EG Grill Installation for ZCV34 Vented Chase..... 29
V34EGS Side Grill Installation for ZCV34 Vented Chase..... 30

General Information

Door Installation and Removal..... 31
Door and Glass Information..... 32
Safety Screen Installation..... 33
IPI Component Locations..... 34

Accessories and Options

34ZCV-TLK Tile Lip Kit..... 35
ZCV34S1 / ZCV34S1PF / ZCV34S2PF Surrounds..... 36
Z46FK Fan Kit Installation..... 37
Fan Speed Control Outside of Fireplace..... 38
ZCV34 Proflame 2 Units - ULK5-2 Halogen Lights - Factory Installed..... 39-40
ZCV34PL Porcelain Liner Installation..... 41
ZCV34RL Refractory Liner Installation..... 42

Media Options

Crushed Glass and Media Options - MQ Dealers Only..... 43
MQROCK2, MQROCK3..... 44
MQ STONE Decorative Stone Set..... 44
MQ EMBER..... 44

RBCB1 Cannonballs..... 45
LOGC44 Oak Log Set..... 46-47
MQLOGF453 Driftwood Log Set..... 48
MQRBD3 Driftwood Log Set..... 49
MQRBRW Birch Log Set..... 50
MQLOGF34BW Log Set..... 51
MQLOGF34OAK Oak Log Set..... 52
MQLOGF34BW & MQLOGF34OAK Setup Instructions..... 53

Gas Line Installation, Use, and Maintenance

Gas Line Installation / Gas Specifications Chart..... 54
Annual Inspection List..... 55
Troubleshooting the Gas Control System..... 56
Burner System Maintenance..... 57
Gas Conversion Part A..... 58
Gas Conversion Part B - for Top Convertible SIT Pilot..... 59
Gas Conversion Part C - for SIT Modulator..... 60
Burner System Removal and Installation..... 61
Lighting Instructions- Millivolt..... 62
Lighting Instructions for Millivolt Valve with 7 Day Timer..... 63
Lighting Instructions- IPI..... 64

Proflame 1 System

Proflame 1 System Overview..... 65
Remote Control Operation..... 66
Parts List..... 67
Configuration #1: Basic manual HI/LO and manual ON/OFF capabilities..... 68
Configuration #2: Remote ON/OFF and Manual HI/LO Capabilities..... 69
Operating the Receiver Without Batteries for GT / EGT / GTM / EGTM Remote Controls..... 70
Configuration #3: Remote ON/OFF, variable HI/LO, and fan capabilities..... 71

Proflame 2 IPI System

Parts List..... 72
IFC Module and Proflame 2 Remote Control..... 73
Cold Climates – CPI Setting - Proflame 2 Remote Control..... 74
Proflame 2 Remote Control..... 75-76
WMBH – Wall Mount Battery Holder – Proflame 1 and 2 IPI Models – Option..... 77
Proflame 2 Schematic..... 78

Venting

Vent Terminal Clearances..... 79
General Vent Installation..... 80
Installation of Side Wall Venting..... 81
Venting Routes and Components..... 82
Horizontal Venting Table..... 82
Flue Restrictors..... 83
Horizontal Snorkel Terminations Z47ST24 / Z47ST36..... 84
Venting Straight Up Through Roof..... 85-86
Venting - Cathedral Ceiling..... 87
Co Linear Flex Kits for Non-Baffled Units..... 88
Co Linear Flex Kits for Baffled Units..... 89
Approved for Power Vent 90

Parts Lists

PVH58 Parts List..... 91
ZCV34 Parts List..... 92-93

Warranty

Limited Lifetime Warranty..... 94

Warnings, Installations and Operations - Installation Regulations

This gas appliance must be installed by a qualified installer in accordance with local building codes, or in the absence of local codes, with the current CAN/CSA-B149.1 or .2 Installation Code (in Canada) or the current National Fuel Gas Code Z223.1- NFPA 54 when installed in the United States. This appliance, when installed, must be electrically connected and grounded in accordance with local codes, or in the absence of local codes, with the current CSA C22.1 Canadian Electrical Code or with the National Electrical Code; ANSI/NFPA 70 when installed in the United States.

⚠ WARNING

FOR SAFE INSTALLATION AND OPERATION OF YOUR GAS FIREPLACE PLEASE NOTE THE FOLLOWING:

1. Do not clean when the glass is hot.
2. Do not use abrasive cleaners.
3. Using a substitute glass will void all product warranties.
4. For safe operation, glass doors must be closed.
5. When purging the gas line, the glass front must be removed.
6. Do not strike or abuse glass. Take care to avoid breakage.
7. Do not alter gas orifice.
8. No substitute materials may be used other than factory supplied components.
9. This appliance gives off high temperatures and should be located out of heavy traffic areas and away from furniture and draperies.
10. Children and adults should be alerted to the hazards of the high surface temperatures of this appliance and should stay away to avoid burns or ignition of clothing.
11. Young children should be carefully supervised when they are in the same room as the appliance. Toddlers, young children and others may be susceptible to accidental contact burns. A physical barrier is recommended if there are at risk individuals in the house. To restrict access to a fireplace or stove, install an adjustable safety gate to keep toddlers, young children and other at risk individuals out of the room and away from hot surfaces.
12. Under no circumstances should any solid fuels (wood, paper) be used in this appliance.
13. Under no circumstances should this appliance be modified. Any parts that have to be removed for servicing should be replaced prior to operating this appliance.
14. Any safety screen, guard, or barrier removed for servicing an appliance must be replaced prior to operating the appliance.
15. Installation and repair should be done by a qualified service person. The appliance should be inspected before use and at least annually by a professional service person. More frequent cleaning may be required due to excessive lint from carpeting, bedding material, et cetera. It is imperative that control compartments, burners and circulating air passageways of the appliance be kept clean. Make sure that the gas valve and pilot light are turned off before you attempt to clean this unit.
16. Clothing or other flammable material should not be placed on or near the appliance. This appliance should not be used as a drying rack for clothing nor should Christmas stockings or decorations be hung from it.
17. Do not use this heater if any part has been under water. Immediately call a qualified service technician to inspect the heater and to replace any part of the control system and any gas control which has been under water.
18. Do not operate appliance unless completely installed as per installation instructions.
19. Failure to position the parts in accordance with these diagrams or failure to use only parts specifically approved with this appliance may result in property damage or personal injury.
20. **WARNING: Do not operate appliance with the glass front removed, cracked or broken. Replacement of the glass should be done by a licensed or qualified service person.**
21. The appliance area must be kept clear and free from combustible materials, gasoline, and other flammable vapors and liquids.
22. The front of the fireplace gives off high temperatures that could ignite combustible material which is kept close to the front of the unit.
23. Ensure that power to the Fireplace is turned off before servicing.
24. Do not operate this Fireplace without the glass front or with a broken glass.
25. Improper installation, adjustment, alteration, service or maintenance can cause injury or property damage. Refer to the owner's information manual provided with this appliance. For assistance or additional information consult a qualified installer, service agency, or the gas supplier.
26. Operation of this appliance when not connected to a properly installed and maintained venting system or tampering with the blocked vent shutoff system can result in carbon monoxide (CO) poisoning and possible death.
27. This appliance is equipped with a three-prong (grounding) plug for your protection against shock hazard and should be plugged directly into a properly grounded three-prong receptacle. Do not cut or remove the grounding prong from this plug.
28. **NOT INTENDED FOR USE AS A PRIMARY HEAT SOURCE.** This appliance is tested and approved as either supplemental room heat or as a decorative appliance. It should not be factored as primary heat in residential heating calculations.
29. This appliance must not be connected to a chimney flue serving a separate solid-fuel burning appliance.
30. Remove all loose materials from the appliance (manual, remote control, etc.) before connecting gas and electricity.
31. Ensure that the remote control is "OFF" before connecting gas and electricity to the appliance.

Installation Requirements for the Commonwealth of Massachusetts

In the Commonwealth of Massachusetts, the installer or service agent shall be a plumber or gas fitter licensed by the Commonwealth.

When installed in the Commonwealth of Massachusetts or where applicable codes; the unit shall be installed with a CO detector per the requirements listed below.

1. For direct-vent appliances, mechanical-vent heating appliances or domestic hot water equipment, where the bottom of the vent terminal and the air intake is installed below four feet above grade the following requirements must be satisfied:
   - **A.** If there is not one already present, on each floor level where there are bedroom(s), a carbon monoxide detector and alarm shall be placed in the living area outside the bedroom(s). The carbon monoxide detector shall comply with NFPA 720.
   - **B.** A carbon monoxide detector shall be located in the room that houses the appliance or equipment and shall:
     - Be powered by the same electrical circuit as the appliance or equipment such that only one service switch services both the appliance and the carbon monoxide detector;
     - Have battery back-up power;
     - Meet ANSI./UL 2034 Standards and comply with NFPA 720; and
     - Have been approved and listed by a Nationally Recognized Testing Laboratory as recognized under 527 CMR.
   - **C.** A Product-approved vent terminal must be used, and if applicable, a Product-approved air intake must be used. Installation shall be in strict compliance with the manufacturer's instructions. A copy of the installation instructions shall remain with the appliance or equipment at the completion of the installation.
   - **D.** A metal or plastic identification plate shall be mounted at the exterior of the building, four feet directly above the location of vent terminal. The plate shall be of sufficient size to be easily read from a distance of eight feet away, and read "Gas Vent Directly Below".
2. For direct-vent appliances, mechanical-vent heating appliances or domestic hot water equipment where the bottom of the vent terminal and the air intake is installed above four feet above grade the following requirements must be satisfied:
   - **A.** If there is not one already present, on each floor level where there are bedroom(s), a carbon monoxide detector and alarm shall be placed in the living area outside the bedroom(s). The carbon monoxide detector shall comply with NFPA 720.
   - **B.** A carbon monoxide detector shall:
     - Be located in the room that houses the appliance or equipment;
     - Be either hard-wired or battery powered or both; and
     - Shall comply with NFPA 720.

A Product-approved vent terminal must be used, and if applicable, a Product-approved air intake must be used. Installation shall be in strict compliance with the manufacturer instructions. A copy of the installation instructions shall remain with the appliance or equipment at the completion of the installation.

For the state of Massachusetts a **T-handle gas shut-off valve** must be used on a gas appliance. This T-handle gas shut-off valve must be listed and approved by the state of Massachusetts. This is in reference to the state of Massachusetts state code CMR238.

Carbon Monoxide (CO) Detector

NOTE: It is recommended that a Carbon Monoxide (CO) Detector be installed in or near bedrooms and on all levels of your home. Place a detector about 15ft [4.5m] outside the room that houses your gas appliance.

Certified for installation in a bedroom or bed/sitting room. In Canada must be installed with listed millivolt thermostat. In USA see local codes.

⚠ WARNING

This product and the fuels used to operate this product (liquid propane or natural gas), and the products of combustion of such fuels, can expose you to chemicals including benzene, which is known to the State of California to cause cancer and reproductive harm. For more information go to: www.P65Warnings.ca.gov.

Pre-installation Questions and Answers

About curing of the paint
Your stove or fireplace has been painted with the highest quality silicone stove paint. This paint dries quickly in 15-20 minutes when first applied at the factory. However, due to the high temperature silicone components, the paint will cure when heat is applied to the appliance as it is first used. The following information applies to the curing process to get the paint fully hard and durable. **Note: Use of painter's tape is not recommended, as it may damage the paint.**

Fire the appliance four successive times for 10 minutes each firing and a 5 minute cool down between each. Be aware during log and firebox paint curing that a white deposit may be developing on the inside of the glass doors. It is important to remove this white deposit from the glass doors using a fireplace glass cleaner.

- Babies, small children, pregnant women and pets should leave the area during the cure phase.
- Ventilate well, open doors and windows.
- Do not touch during curing.

Why does my fireplace or stove give off odor?

It is normal for your fireplace to give off some odor at first. This is due to the curing of the paint, adhesives, silicones and any undetected oil from the manufacturing process as well as the finishing materials used with the installations (e.g. marble, tile and the adhesives used to adhere this product to the walls can react with heat and cause odors).

It is recommended that you burn your gas fireplace or stove for a minimum of four hours at a time with the fan off (if a fan is present) after the curing of the paint has been completed. These odors can last upward to 40 hours of burn time; keep burning at a minimum of four hours per use until odors dissipate.

Noise coming from the fireplace?

Noise is caused by the expansion and contraction of metal as the appliance heats up and cools down. This is normal and is similar to the sounds produced by a furnace or heating duct. This noise does not affect the operation or longevity of your fireplace.
It is also normal for the fan to make some noise when it comes on. This noise can be reduced somewhat by turning down the speed of the fan with the variable speed control. Be aware, however, that this will reduce the volume of heated air circulated into the room by the fan.

Note to the Installer:
Be sure appliance is working properly and its operation (including remote control operation, if included) is fully explained to and understood by the customer.

Operations and Maintenance Instructions

For safe installation and operation note the following:

- Be sure to read and understand all the instructions in this manual before operation of appliance.
- Ensure all wiring is correct and properly enclosed to prevent possible shock.
- Check for gas leaks.
- Make sure the glass door is properly installed before operation. Never operate the appliance with the glass door removed.
- Make sure venting and termination cap are installed and unobstructed.
- If brick or porcelain liners are used, ensure they are installed.
- Verify that the pilot can be seen when lighting the appliance. If not, the log or rock placement is incorrect.
- If the unit is turned off, you must wait a minimum of 60 seconds before re-lighting it.
- Venting systems should be periodically examined by a qualified agency.
- The flow of combustion and ventilation air must not be obstructed.
- The Burner/Log Assembly has been engineered and permanently adjusted for proper flame control.
- Periodically remove the logs from the grate assembly and vacuum any loose particles from the grate and burner areas. See Log Placement page to remove logs. Vacuum burner parts and replace logs.
- Never use your gas fireplace as a cooking device.
- Label all wires prior to disconnection when servicing controls. Wiring errors can cause improper and dangerous operation. Verify proper operation after servicing.
- Areas in and around the Chase Vent Openings should be cleaned annually.

Fireplace Installations in Covered Outdoor Locations
– FOR BASIC MILLIVOLT UNITS ONLY- NO FAN – NO LIGHTS-

CAUTION – Installation of an indoor gas fireplace with an outdoor exposure is not covered under the (ANSI Z21.88 – CSA 2.22 or ANSI Z21.50 – CSA 2.33) standard(s) used to certify the indoor gas-fired fireplace. The Intertek safety certification will not apply to this installation method. This installation method must be deemed acceptable by the Authority Having Jurisdiction (AHJ) prior to the indoor gas fireplace being installed.

Kingsman and Marquis Direct Vent fireplaces may be installed into outdoor locations provided they are suitably protected from direct water impingement. However, all installation clearances in the appliance manual must be observed. Framing, Clearances to Combustibles, Mantel Heights, Facing Requirements, Venting Installation, etc. **Use supplied Safety Screen. No vented chase is allowed outdoors.**

- All wiring connections to line power shall be in accordance with outdoor requirements of; -NECA NFPA 70 in the USA -Canadian Electrical Code, CSA C22.1 for Canada.
- The Fireplace is not to be operated in temperatures below freezing (0°C / 32°F).
- ⚠ **NOTE: TEMPERED GLASS WARNING:** Tempered glass is vulnerable to rapid and/or extreme changes in temperature (thermal shock). Take care to prevent water from contacting the fireplace, especially if it is hot.
- See-Through Units are suitable for an outdoor location, but not on the outside wall of a house or other structure, as air flows through both sides of the fireplace.
- A Minimum sheltering cover (overhang) of 1/2 the distance from the base of the fireplace to the ceiling (base of roofline) is required**.**

EXAMPLE: The bottom of the fireplace is 84” from the ceiling.
Therefore, 42” of sheltering cover is required above fireplace.

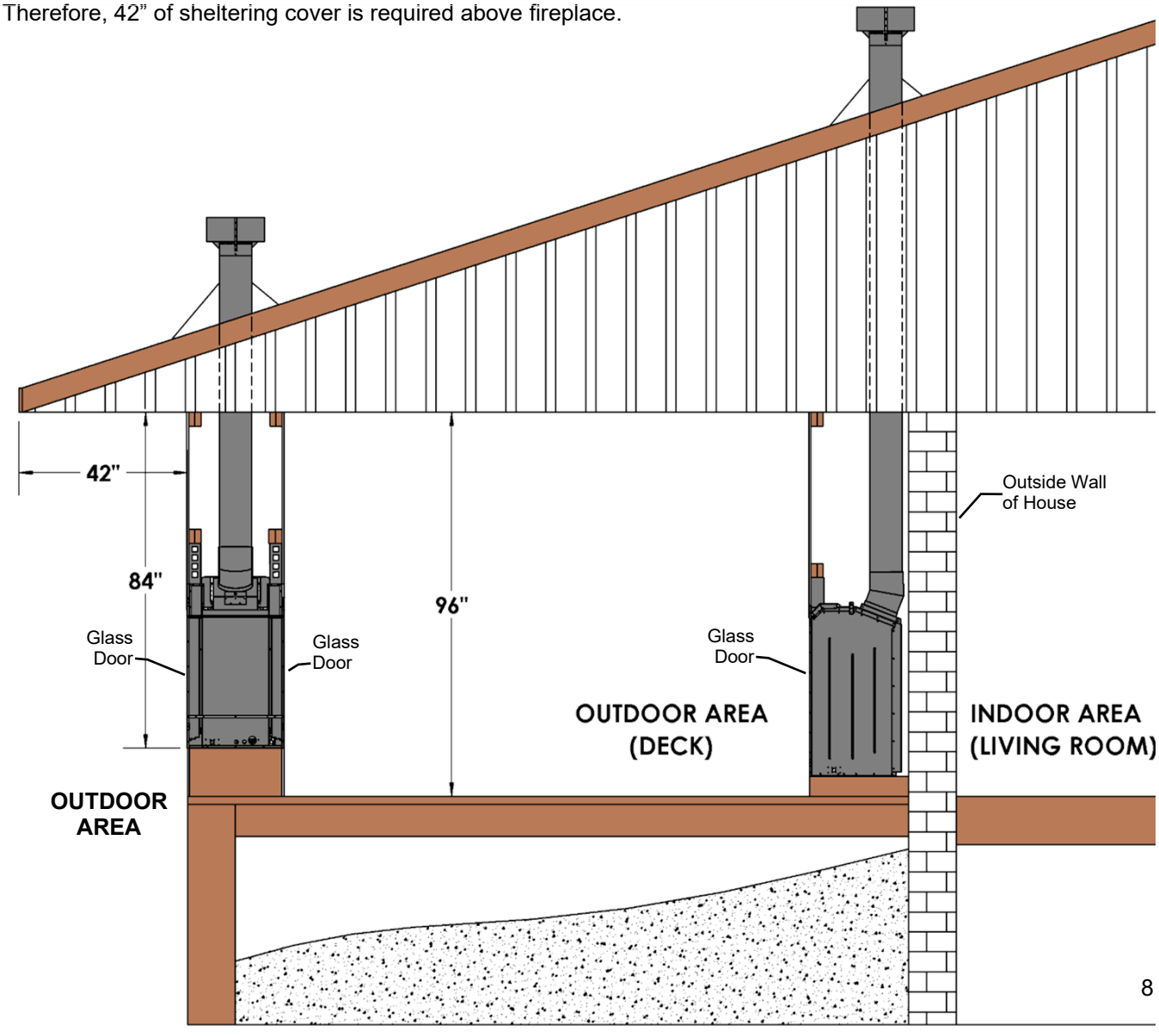

Mobile Home/Manufactured Housing Installation

This Direct Vent System Appliance must be installed in accordance with the manufacturer's installation instructions and the Manufactured Home Construction and Safety Standard Title 24 CFR, Part 3280, or the current Standard for Fire Safety Criteria for Manufactured Home Installations, Sites, and Communities ANSI/NFPA 501A, and with CAN/CSA Z240 MH Mobile Home Standard in Canada.

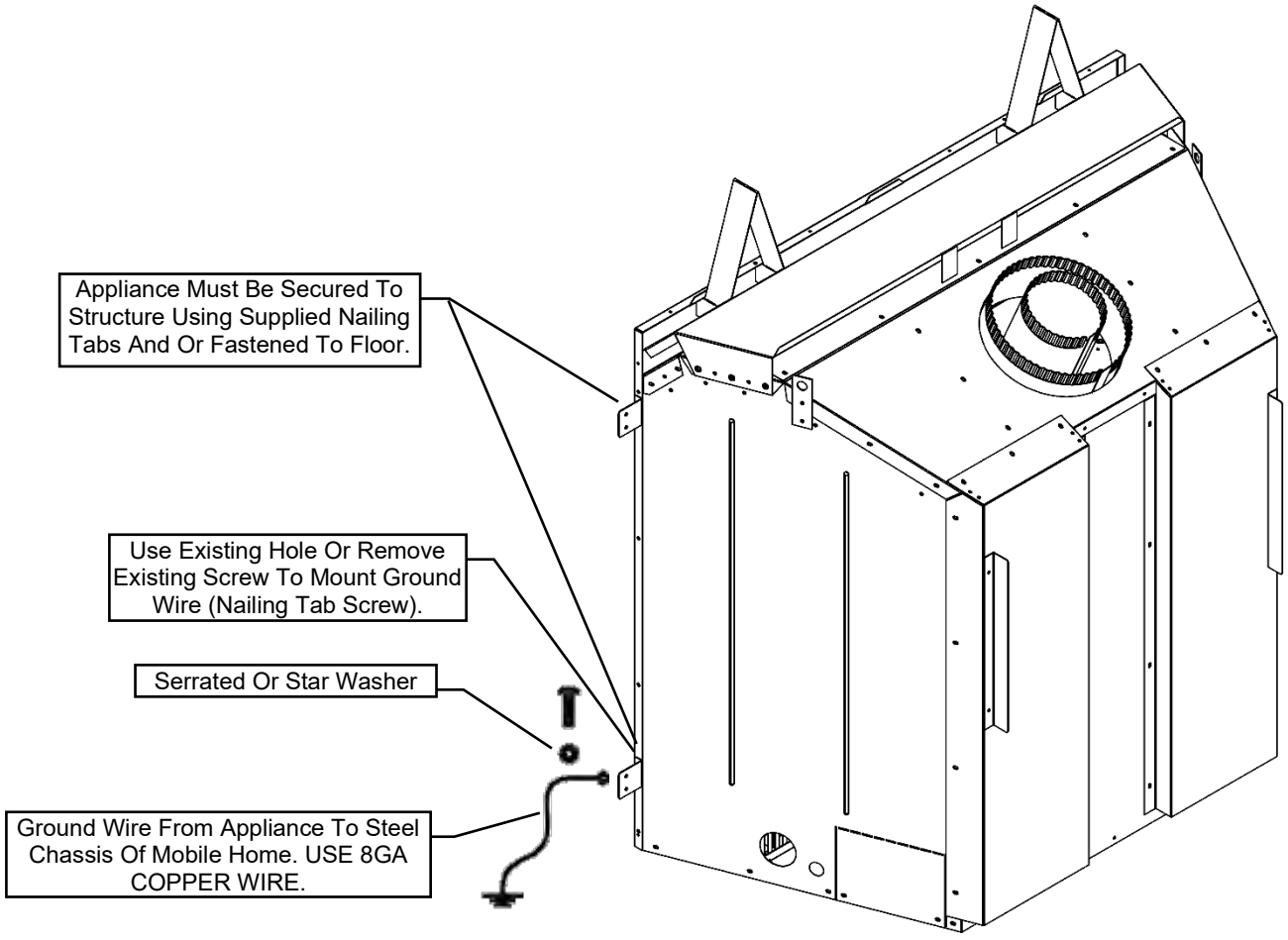

THE VENTED GAS FIREPLACE HEATERS IN THIS MANUAL MAY BE INSTALLED IN MANUFACTURED (MOBILE) HOMES AFTER FIRST SALE IN THE USA.

THE VENTED GAS FIREPLACE HEATERS IN THIS MANUAL MAY BE INSTALLED IN MANUFACTURED (MOBILE) HOMES IN CANADA.

Please follow the current ANSI/NFPA 70 National Electrical Code in the USA and CAN/CSA C22.1 Canadian National Electrical Code in Canada.

An appliance must be grounded to the steel chassis of the home with 8 ga. copper wire using a serrated or star washer to penetrate paint or protective coating to insure grounding.
Use carriage bolt at the attachment point (see diagram above) to secure the appliance to the floor.

⚠ Warning: Do not compromise the structural integrity of the manufactured home wall, floor or ceiling, during installation of appliance or venting.

For required venting components see venting installation in appropriate section of this manual.

Certified for installation in a bedroom or bed/sitting room. In Canada must be installed with listed millivolt thermostat. In USA see local codes.

ZCV34 Framing Your Gas Fireplace

This section is intended for qualified installers only. Before beginning, make note of where the gas and electrical accesses are located on the unit. This will streamline the construction process. Furthermore, familiarize yourself with the venting and clearance requirements (see Venting section) for this appliance. Failure to comply with those requirements can seriously compromise the safety and operation of the fireplace.

Specifications

1. Cold climate installation recommendation: When installing this fireplace against non insulated exterior wall or chase, it is recommended that the outer walls be insulated to conform to applicable insulation codes. Drywall & vapor barrier must be installed over insulation to prevent contact of insulation and unit.
2. Choose fireplace location and frame in accordance with the fireplace framing dimensions specified (view diagrams).
3. Drywall or other combustible material can extend up to the Drywall Stops located on the sides of the unit, and up to the bottom and top.
4. A Hearth is not required for this unit.

Vertical Venting in Cold Climates

In cold climate conditions where temperatures go below -10 degrees Celsius or 14 degrees Fahrenheit, we recommend that the chase be insulated and where the vent pipe enters into the attic space that the pipe be wrapped with an insulated Mylar sleeve. This will increase the temperature of the vent and help the appliance to vent properly in cold weather conditions.

It is also important in vertical vented direct vent appliances that the appliance be operated daily during the winter months as this will help stop the termination from freezing up. We recommend using a thermostat set at room temperature to allow the unit to cycle.

For IPI models it may be necessary to set the appliance to Standing Pilot mode to maintain heat in the cavity. The purpose of this procedure is to prevent cold air from penetrating the chimney and then onto the living space. Therefore, when the internal temperature is slightly elevated the fireplace is able to freely exhaust its combustion and hence making it easier to startup.

Certified for installation in a bedroom or bedsitting room. In Canada must be installed with listed millivolt thermostat (In USA see local codes).

ZCV34 Stand-off and Nailing Tab Locations

Make note of where the stand-off locations are. These stand-offs are provided as indicators to illustrate the boundaries for framing. Therefore, no framing material is permitted to extend beyond these stand-offs.

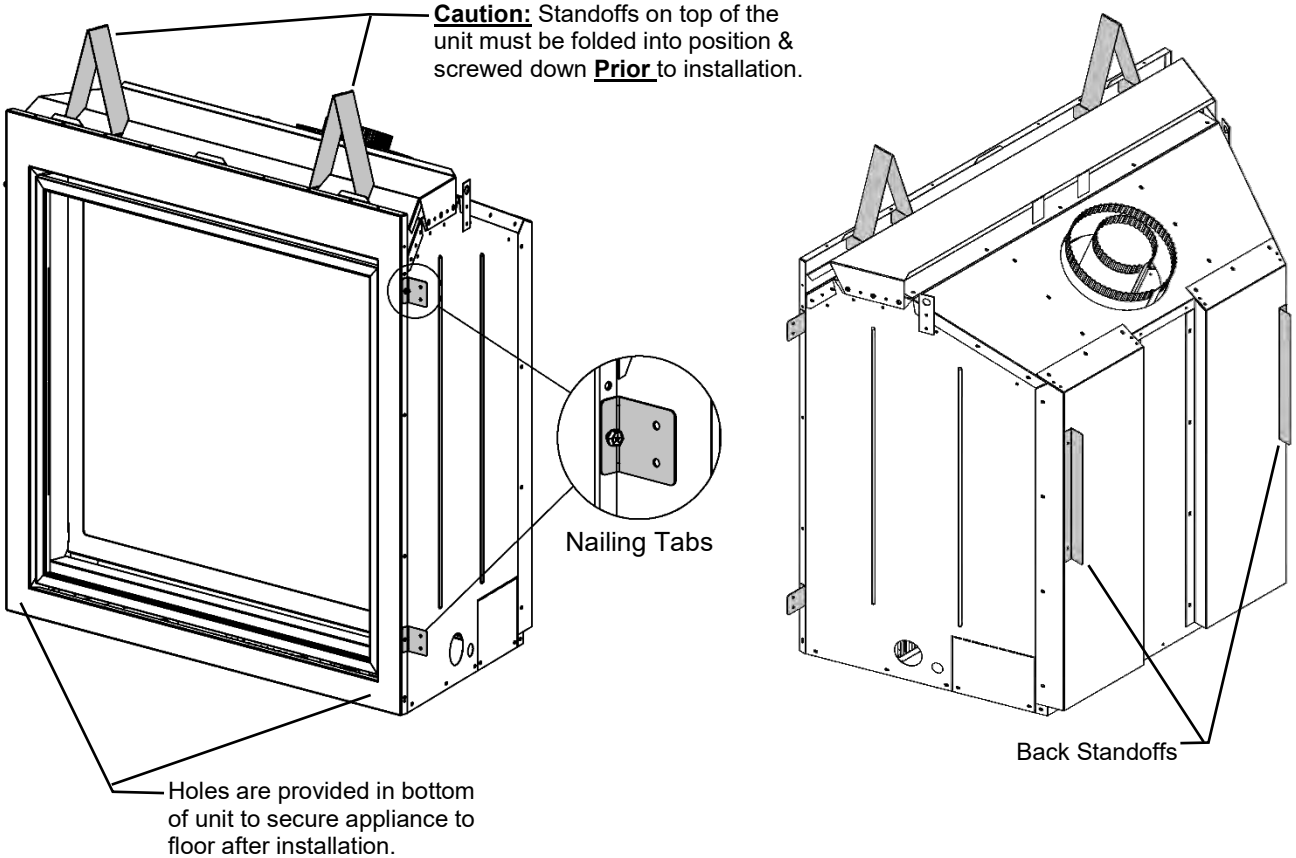

ZCV34 Framing- Nailing Tab Guide

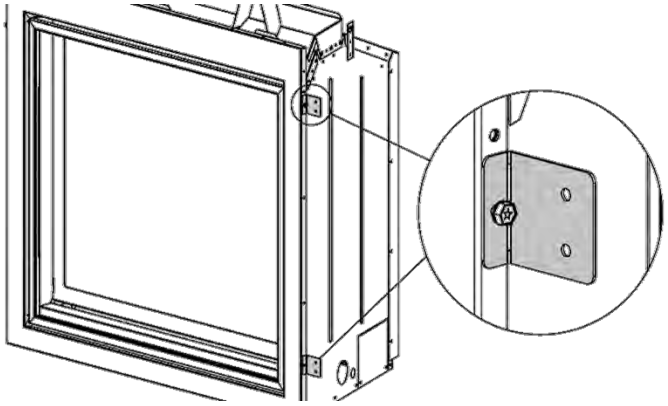

[Qty]2 Nailing Tabs are located on each side of the front frame.

These Nailing Tabs can be used in two ways:

Framing Flush with Face of Fireplace

Fireplace to be covered with Non-Combustibles (e.g., Concrete Board) for **Flat Wall** appearance.

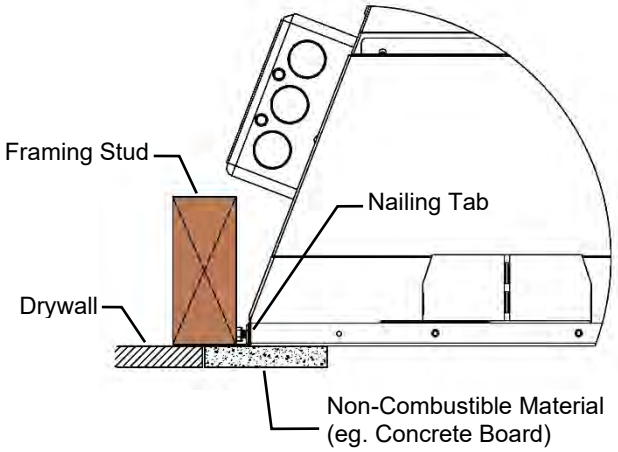

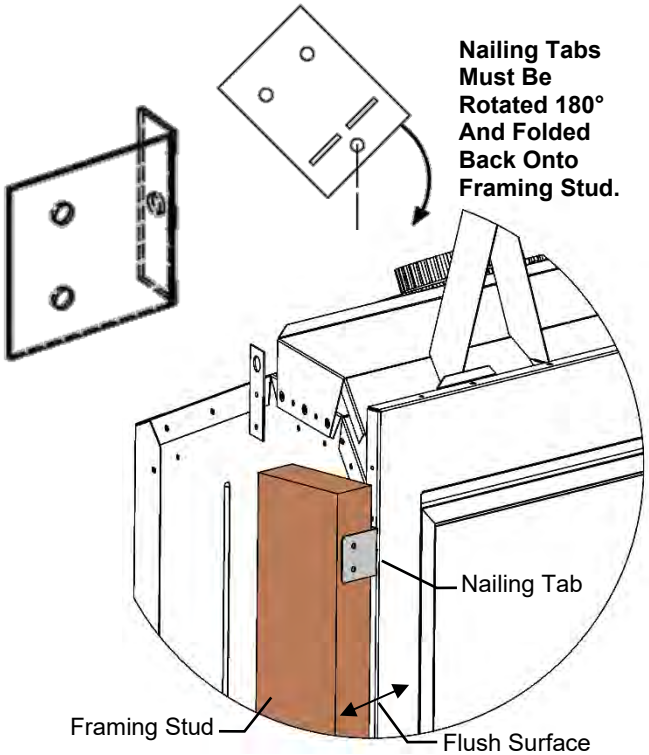

1/2" Drywall Flush with Face of Fireplace

Fireplace and Combustible Wall to be covered with a surround or Non-Combustible Materials (e.g. Stone around Fireplace).

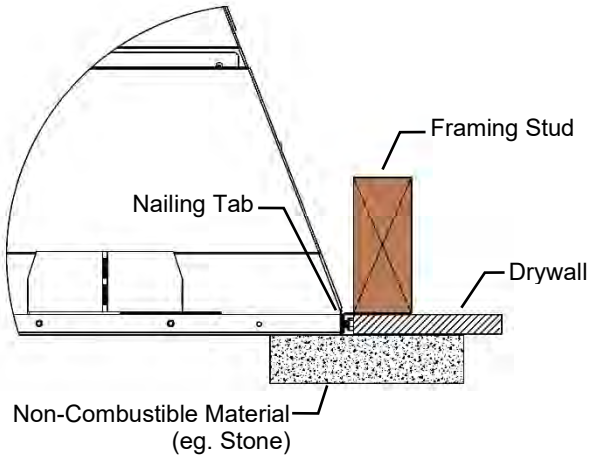

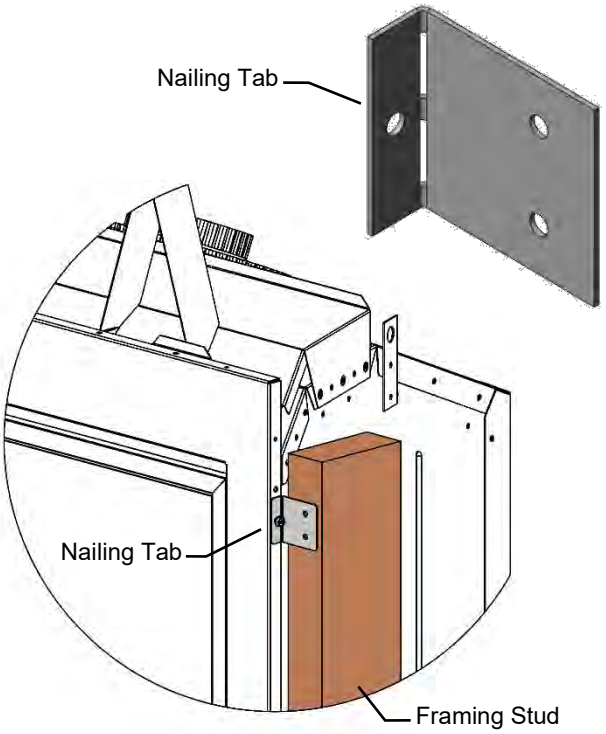

ZCV34 Venting in the Chase - Warning - Venting Must Not Impede Air Flow in the Enclosure

A minor offset to avoid studs or joists is allowed. 1” clearance to combustibles must be maintained.

Horizontal Venting – Exit the Enclosure through the back wall directly above the flue. Use a Wall Thimble to protect combustibles. **DO NOT RUN HORIZONTAL VENTING INSIDE THE ENCLOSURE.**

Vertical Venting – Exit the Enclosure before any major offsets are made (see below). A Firestop or Attic Insulation Shield must be used on the underside of the top of the Enclosure.

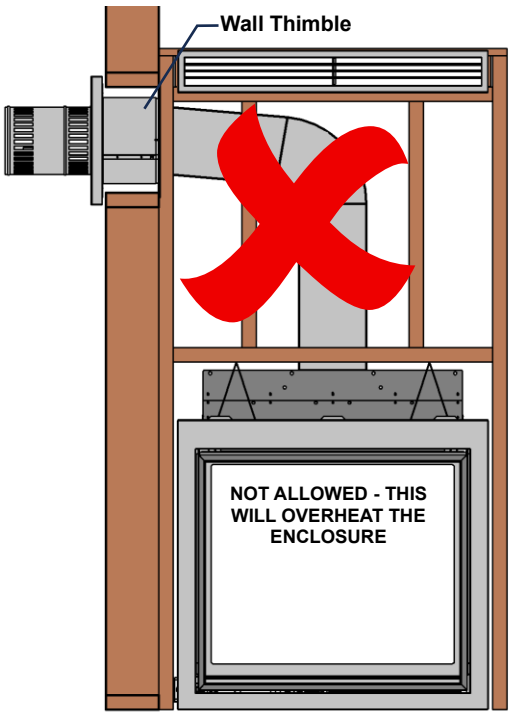

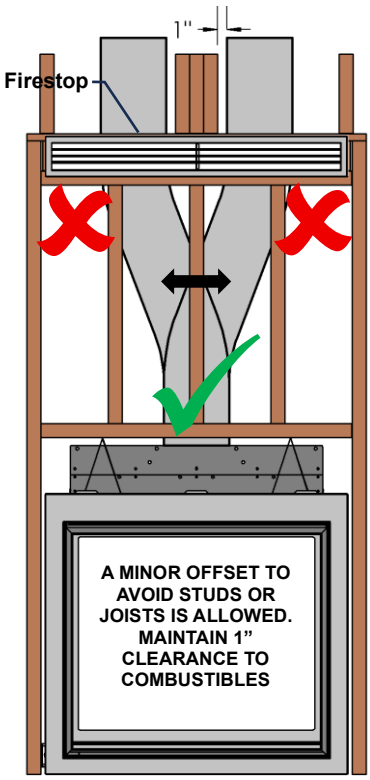

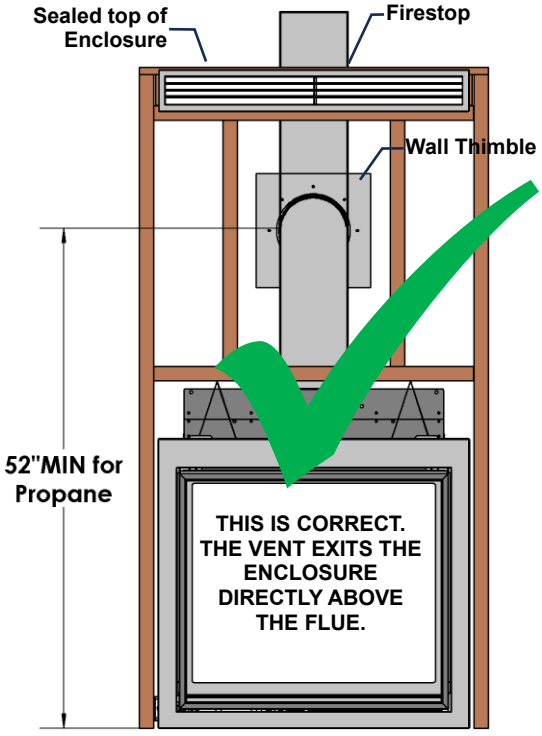

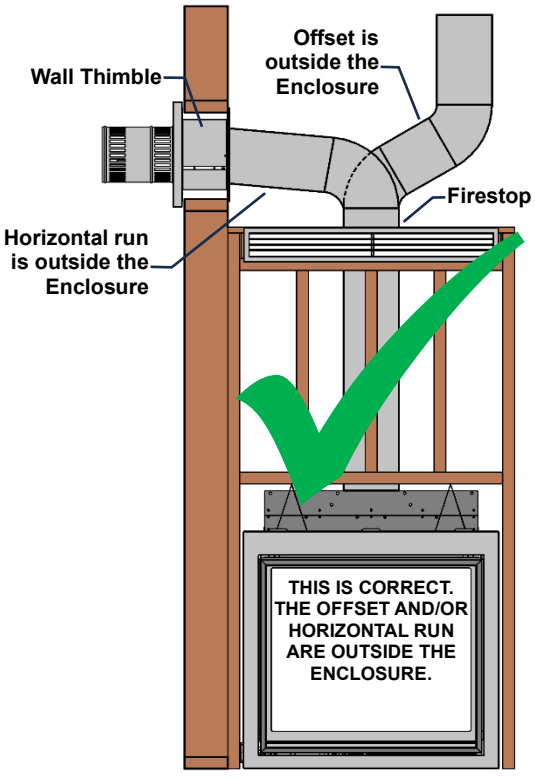

ZCV34 Locating Your Appliance

LOCATION KEY:

A. Flat on Wall

B. Across the Corner

C. As an Island

D. As a Room Divider

E. Flat on Wall Corner

F. Exterior Wall

See Mantel Leg Clearances Instruction for the proper placement of fireplace.

Island installation with a top vent is possible as long as the horizontal portion of the vent system does not exceed 20 feet (6.1 m).

*** NOTE:** For vented chases, Venting runs to side walls must exit the enclosure first. ***Refer to Venting Routes and Components, Example D.***

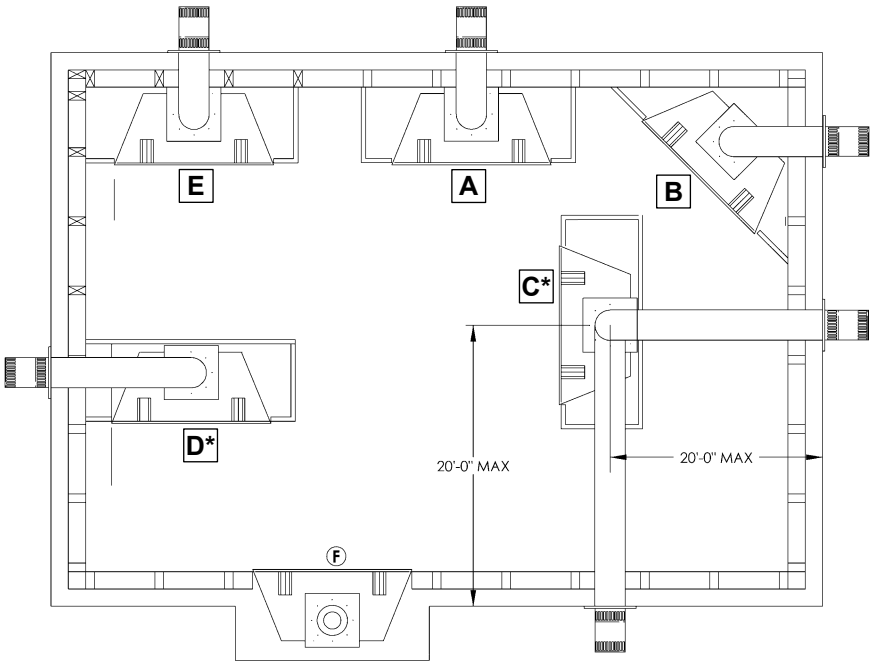

ZCV34 Fireplace Dimensions

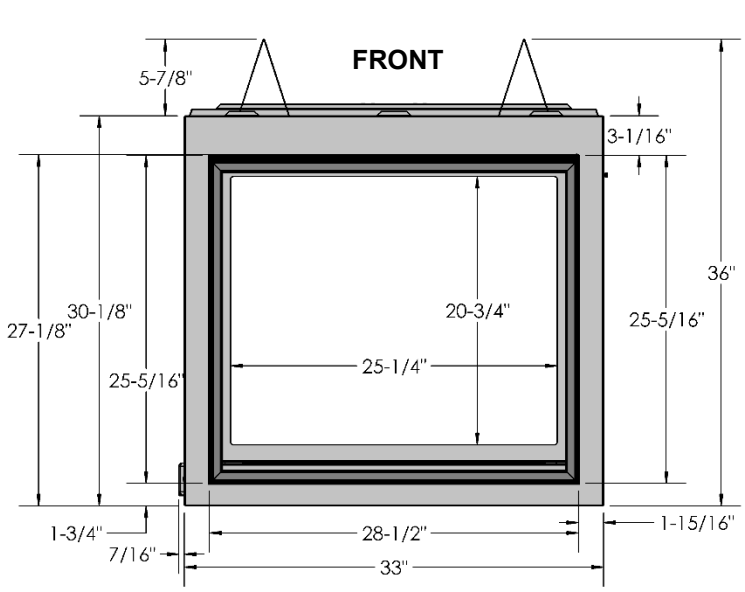

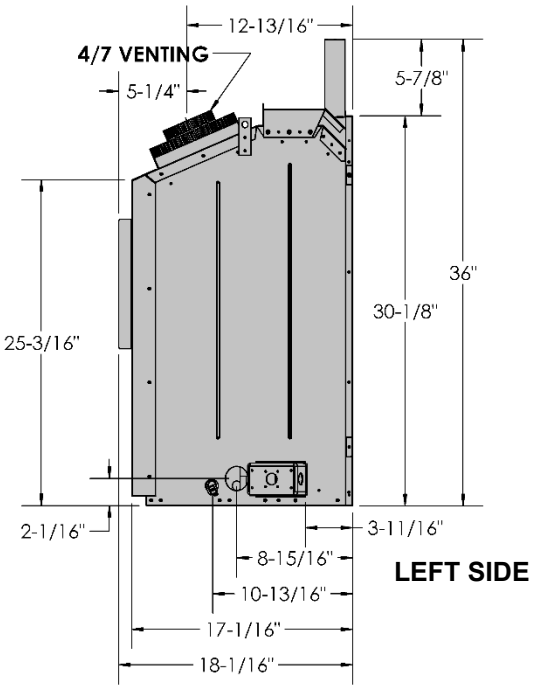

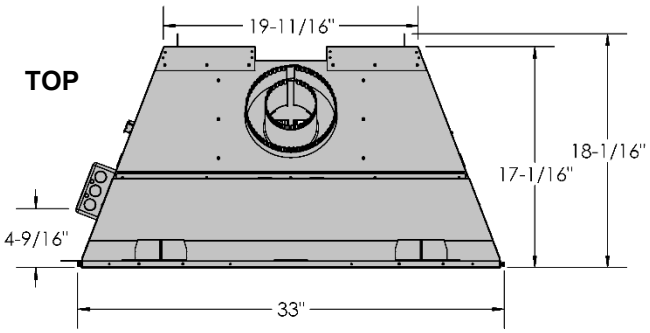

ZCV34 Chase Options: Non-Vented / Vented / Vented with Recessed Front

FRAMED AS NON-VENTED CHASE:
(Fireplace is installed <u>As Shipped</u>, with Ventilation Plates in place.)

This is a traditional fireplace installation where the fireplace is built into a non-vented chase.

- Only non-combustible materials may cover the face of the fireplace.
- Chase wall surface temperature will be warmer.
- Mantel height is higher than Vented Chase.

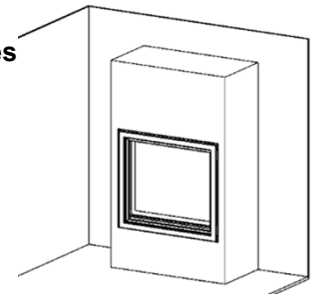

Chase built into room

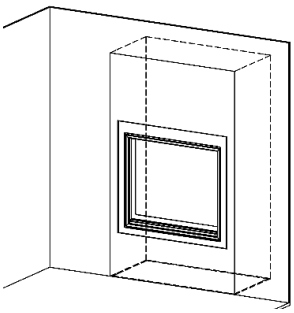

Chase built outside of room (Doghouse)

FRAMED AS VENTED CHASE:
(<u>Ventilation Plates are removed</u> from fireplace before it is installed into a Vented Chase.)

- Combustible materials may cover the face of the fireplace.
- Chase walls will be cool to the touch.
- Mantel height is lower than Non-Vented Chase.
- Chase must be vented at the top with a specified grill (**V34EG, V34EGS Side Grills**), or opening size.

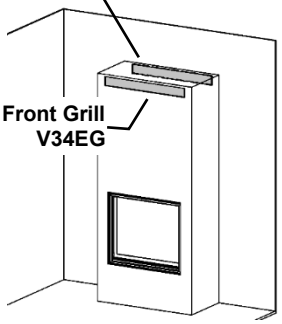

Chase built into room

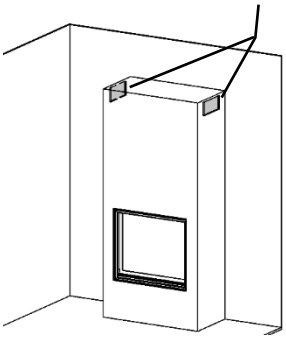

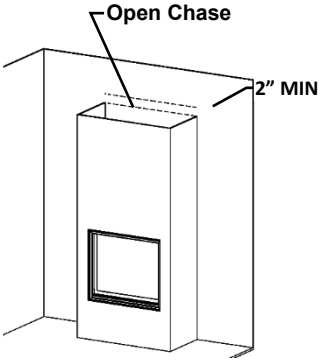

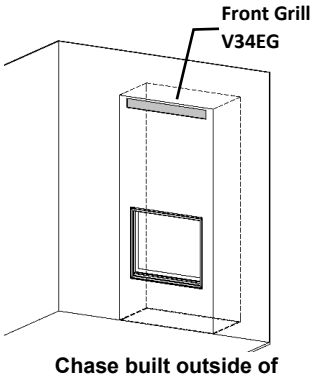

Chase built outside of room (Doghouse)

NOTE: <u>For oversized enclosures</u> (i.e., along a long wall), it is recommended to seal them off internally. This will help to remove heat and prevent hot spots. **Be sure to maintain all required clearances and minimum dimensions.**

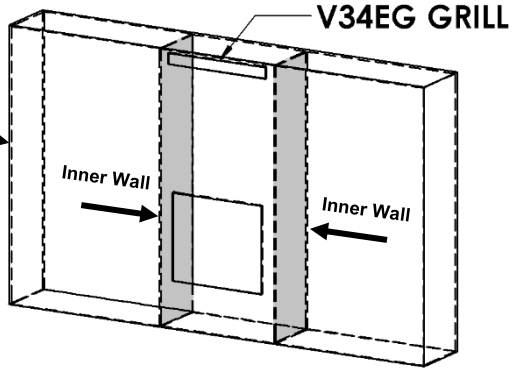

<u>Recessed Vented Chase- Option:</u>

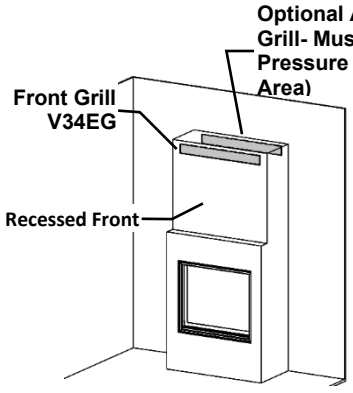

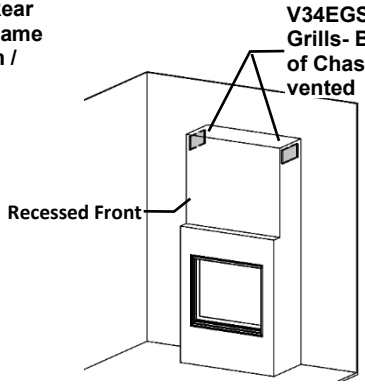

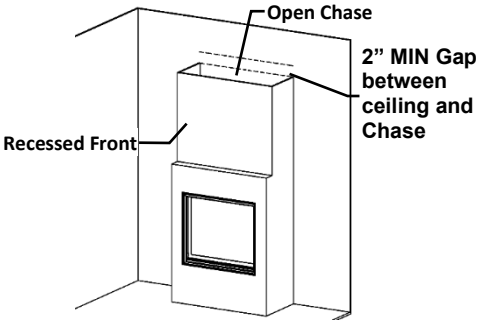

ZCV34 – Non-Vented Chase VS Vented Chase - Choose Your Installation

⚠ HEAT CANNOT BE DISCHARGED INTO THE WALLS, FLOOR, OR CEILING.

- Heat must exit through the required vented chase opening near the ceiling.
- The top of the enclosure must be sealed.
- Grill openings must be flush with the enclosure top.
- An open chase must have a minimum 2” opening on 3 sides of the enclosure.

⚠ If using insulation in vented chase (i.e. for outside wall), wall board / drywall is required to support all insulation. Vented chase must be clean and free of all debris (i.e. loose insulation, pieces of wood, etc.)

ELECTRICAL WIRES IN CHASE MUST BE PROPERLY ATTACHED TO INSIDE WALL OF CHASE. Please follow the current CSA C22.1 Canadian Electrical Code or the National Electrical Code; ANSI/NFPA 70 when installed in the United States.

ZCV34 -Vented Chase- Removal of Vent Covers- See Vented Chase Framing

⚠ CAUTION: IF VENTILATION PLATES ARE REMOVED, YOU MUST VENT THE CHASE!

Fireplace before conversion

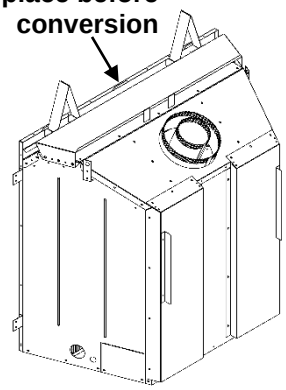

STEP 1: Using a 1/4” Hex Driver, remove the following components:

NOTE: Use a sharp utility knife to cut any silicone adhering the Outer Half Shield to the appliance.

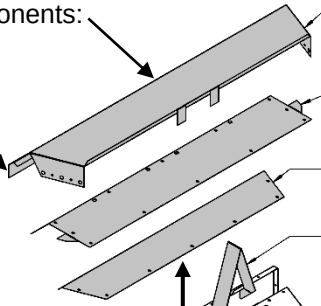

STEP 2: Bend Side Tabs Up 90° on Vent Outer Cover and flip part over

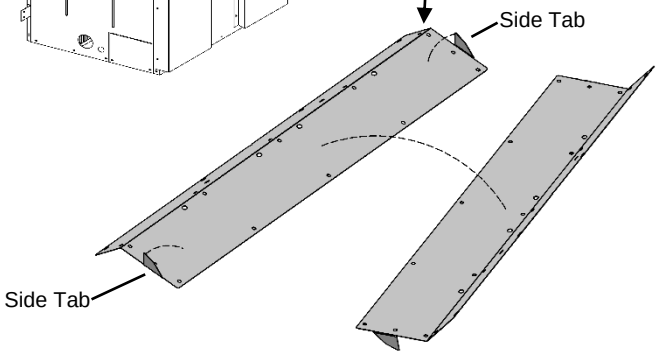

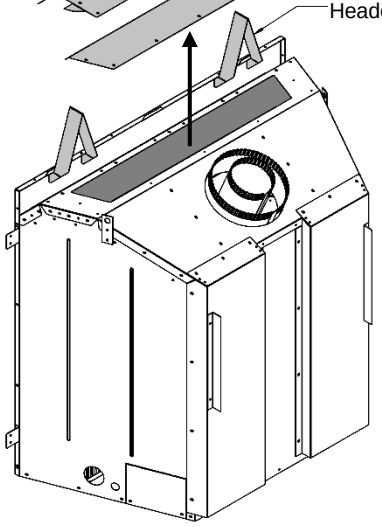

STEP 3: Install Vent Outer Cover in new position and set Standoffs in place.

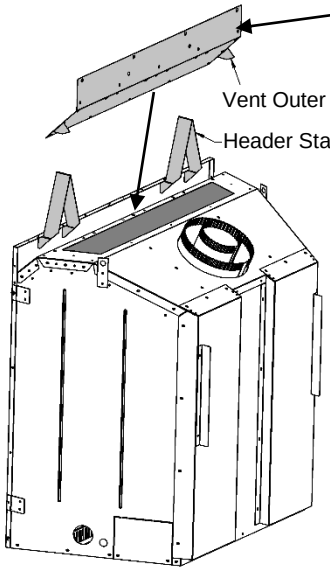

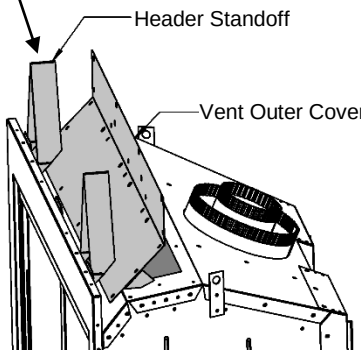

Fireplace after conversion

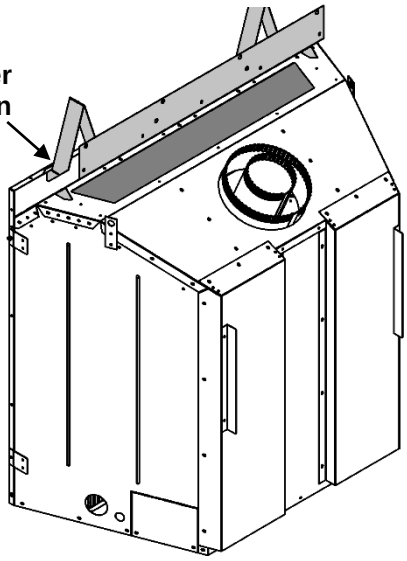

ZCV34 Framing Dimensions for Non-Vented Chase
Fireplace is installed As Shipped, with Ventilation Plates in place.

Determine whether face of fireplace will be flush with framing or finished wall.

Refer to Nailing Tab Guide also. **NOTE:** These structures are not load bearing.

No loose Combustibles (wood, wiring, etc.) are allowed inside the Chase area.

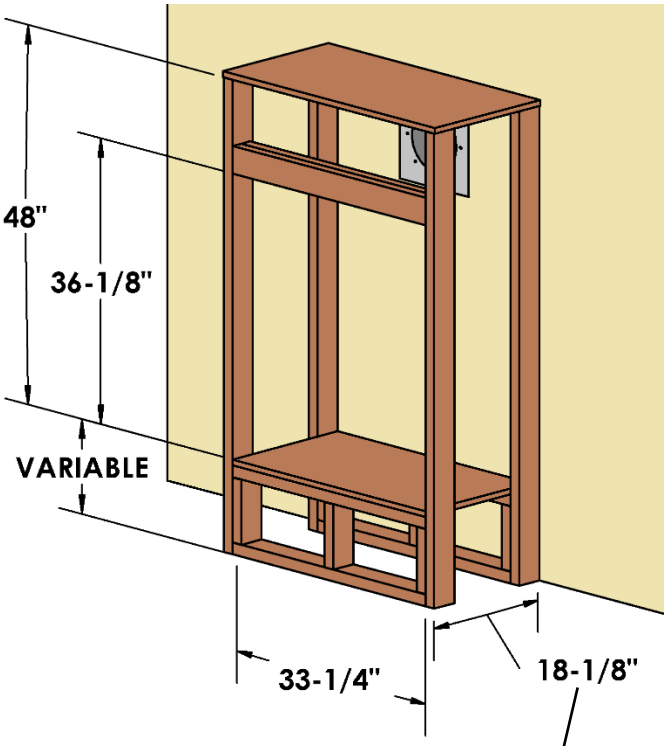

Framing Depth:

18-1/8" for Framing flush with face of unit.

17-5/8" for 1/2" Non-Combustible facing flush with face of unit.

Vertical Venting MUST maintain 1" clearance to combustibles.

Z58WTS Wall Thimble Shield Must be used in Non-Vented Chases with Horizontal Venting where the top of the chase is less than 12 inches from the top of the vent.

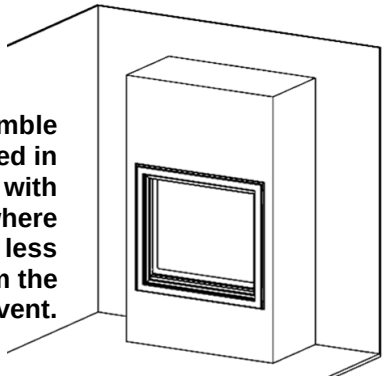

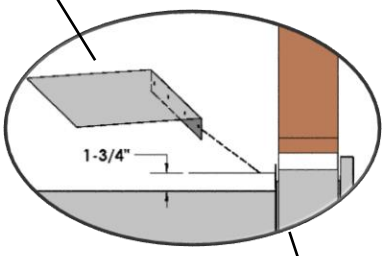

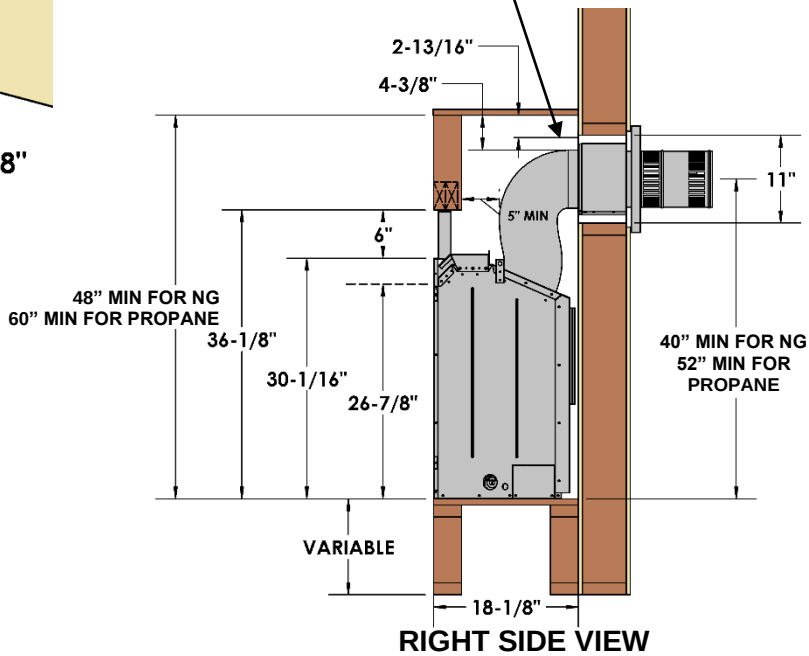

RIGHT SIDE VIEW

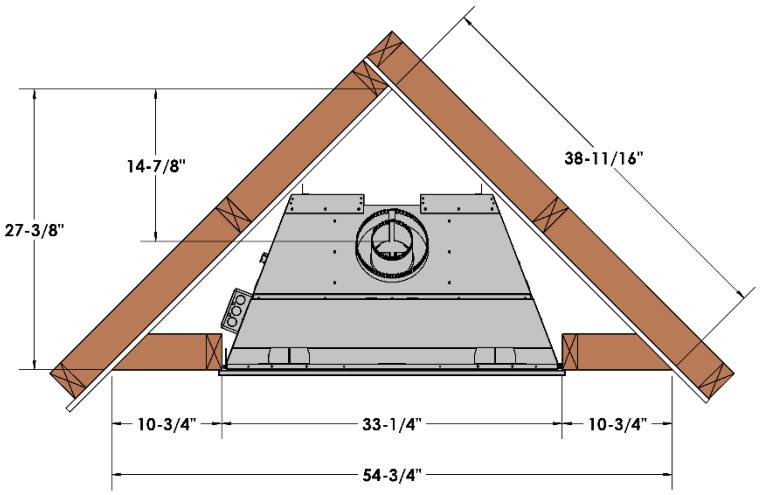

CORNER FRAMING

Fig.1
Framing for Horizontal Vent Termination
(See **Installation of Side Wall Venting** Section)

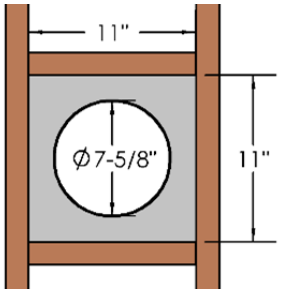

ZCV34 Framing Dimensions for Non-Vented Chase Built Outside of Room
Fireplace is installed As Shipped, with Ventilation Plates in place.

Determine whether face of fireplace will be flush with framing or finished wall.

Refer to Nailing Tab Guide also. **NOTE:** These structures are not load bearing.

No loose Combustibles (wood, wiring, etc.) are allowed inside the Chase area.

Chase built outside of room (Doghouse)

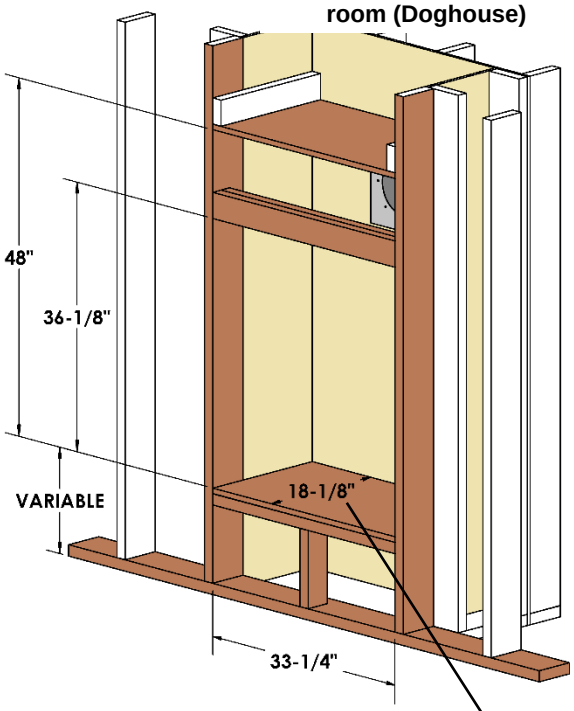

Framing Depth:

18-1/8" for Framing flush with face of unit.

17-5/8" for 1/2" Non-Combustible facing flush with face of unit.

Vertical Venting MUST maintain 1" clearance to combustibles.

Chase built outside of room (Doghouse)

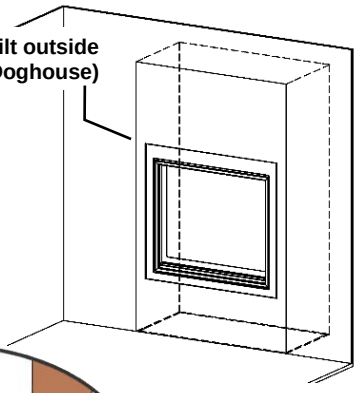

Z58WTS Wall Thimble Shield Must be used in Non-Vented Chases with Horizontal Venting where the top of the chase is less than 12 inches from the top of the vent.

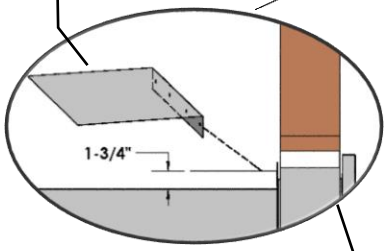

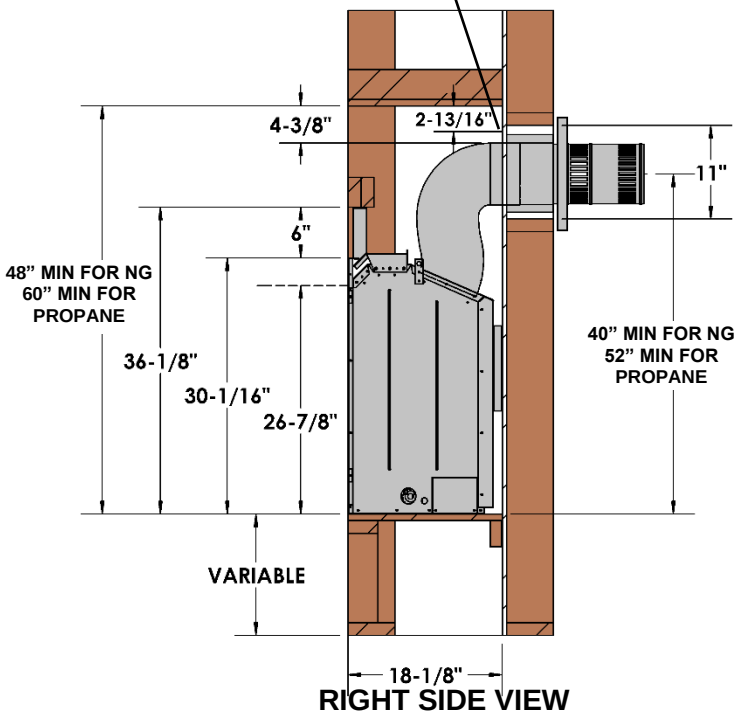

RIGHT SIDE VIEW

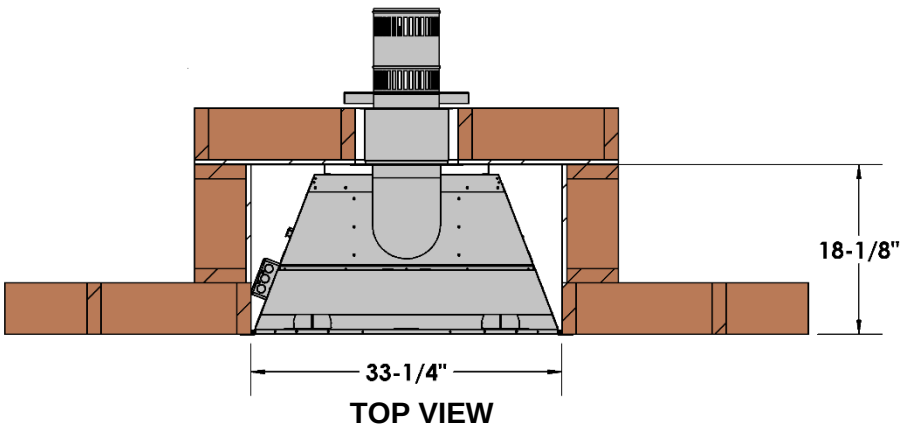

TOP VIEW

Fig.1
Framing for Horizontal Vent Termination
(See **Installation of Side Wall Venting** Section)

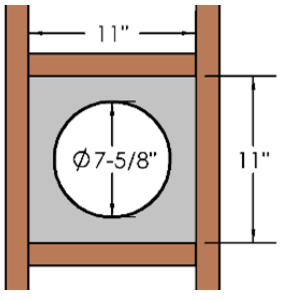

ZCV34 -Mantel Clearances- for Non-Vented Chase
Fireplace is installed As Shipped, with Ventilation Plates in place.

Before installing any mantels it is important to determine the combustibility of its material(s). There are two types of mantels to consider: Combustible and Non-Combustible.

A **Combustible Mantel** is one that consists of material(s) that may discolor, combust, or lose its integrity in the presence of heat. These types of mantels must strictly conform to the dimensional requirements shown.

Conversely, a **Non-Combustible Mantel** is one that is constructed with material(s) that will not combust. Check your local codes and regulations to determine whether your mantel is Combustible or Non-Combustible.

The advantage to Non-Combustible Mantels is that it may extend right up to the tile lip of the fireplace. Combustible mantels must adhere to the dimensional restrictions shown.

Mantel Dimensions are from front face or Non-Combustible Facing Materials covering fireplace.

⚠-Combustible Objects on Non-Combustible Mantel Warning-
Combustible objects must not be placed on a Non-combustible Mantel unless the mantel meets the dimensional requirements for a Combustible Mantel. Determine whether your mantel conforms to the requirements of a Combustible Mantel.

Right Side View

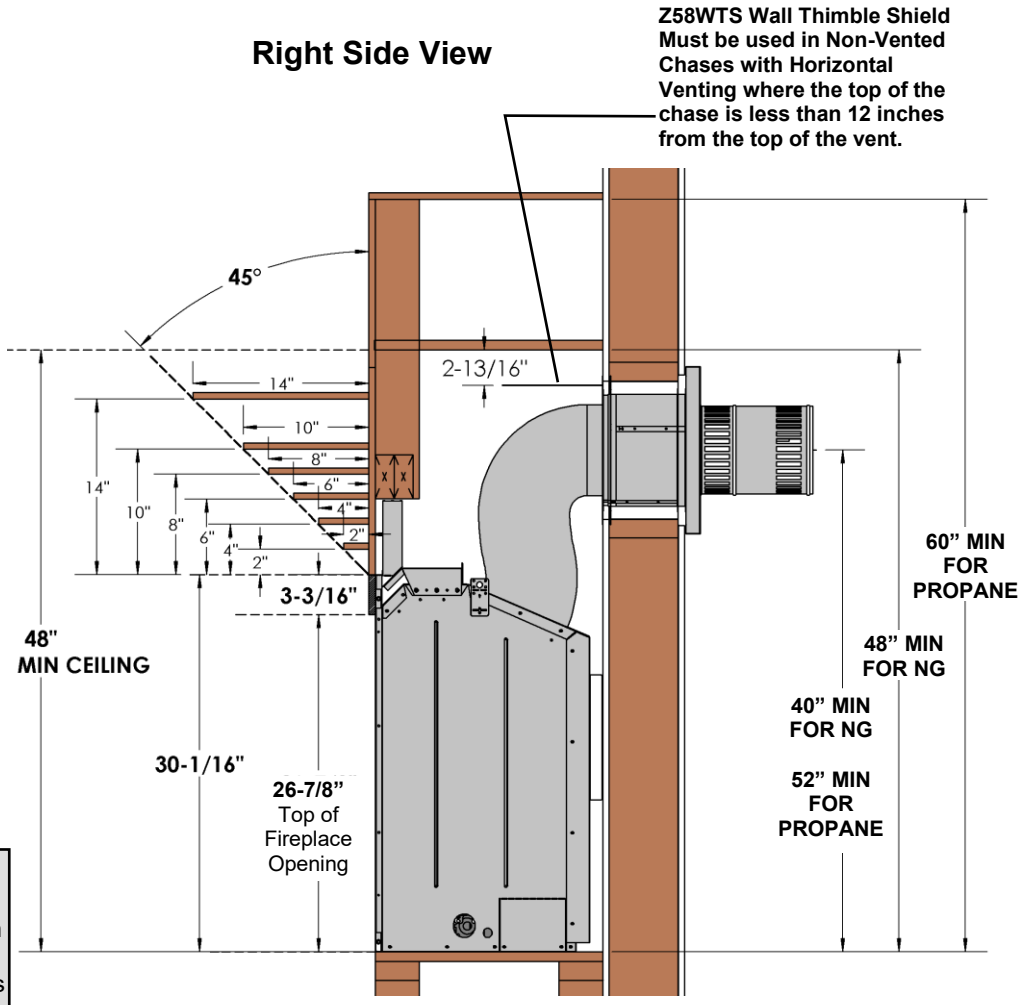

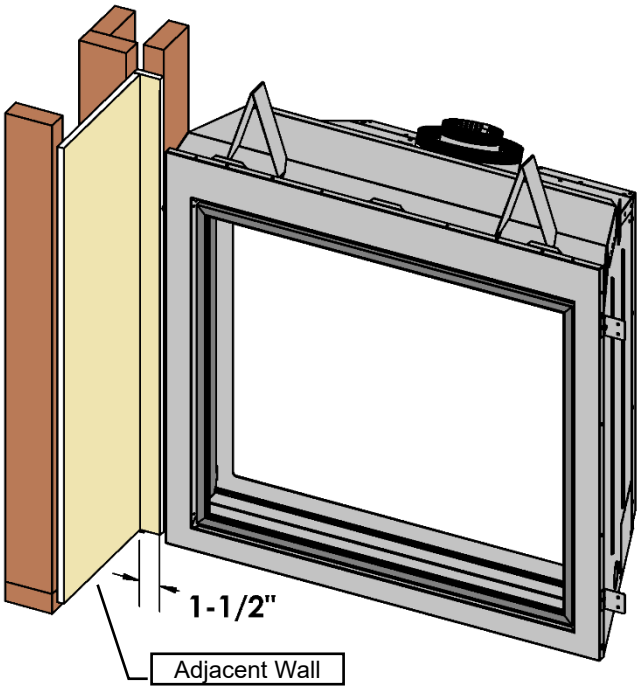

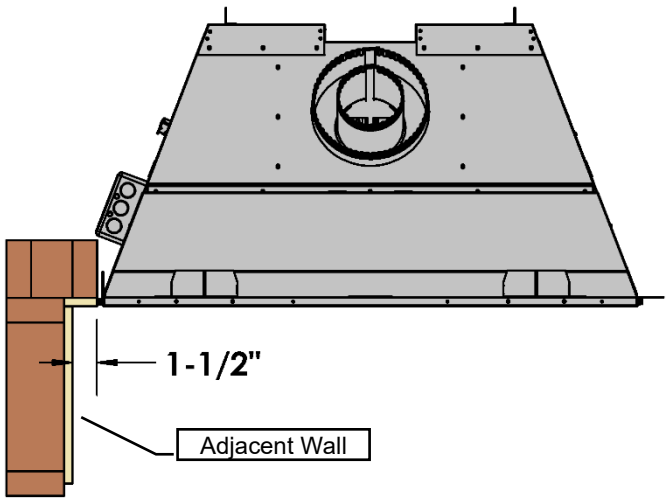

ZCV34 Clearance to Combustibles for Non-Vented Chase
Fireplace is installed As Shipped, with Ventilation Plates in place.

Front	36” [92cm]
Back (from Stand-offs)	0” [0cm]
Side (from Stand-offs)	0” [0cm]
Floor* (See **Note**)	0” [0cm]
Minimum Ceiling Height (from bottom of fireplace)	48” [122cm]
Minimum Enclosure Height (from bottom of fireplace)	48” [122cm] Natural Gas 60” [152cm] Propane
Top (from Stand-offs)	0” [0cm]
Adjacent Wall	1-1/2” [3.8cm]
Top of 90° Bend in minimum Enclosure	4-1/2” [11.5cm] With Z58WTS Wall Thimble Shield installed
Top of 90° Bend inside Enclosures above minimum height	4-1/2” [11.5cm] With Z58WTS Wall Thimble Shield installed
VENTING SYSTEMS	
Top of Horizontal Pipe	1/1/2” [3.8cm]
Side & Bottom of Horizontal Pipe	1” [2.5cm] All Vent Systems
Vertical Vent Pipe	1” [2.5cm] All Vent Systems

***Note:** If appliance is installed directly on carpeting or other combustible material other than wood flooring, a metal or wood panel extending the full width and depth of the appliance must be used. Carpet may extend 1 inch above the floor of the appliance.

Vinyl Flooring- Luxury Vinyl Plank (LVP), Luxury Vinyl Tile (LVT), and other vinyl flooring can be sensitive to radiant heat and changes in temperature. We recommend a minimum 12-inch hearth should be installed, or the fireplace should be raised at least 24 inches above the floor. **The use of vinyl flooring is done at the installer’s risk.**

The **Wall Thimble Shield Z58WTS** is required in non-vented enclosures with horizontal venting where the top of the enclosure is less than 12 inches from the top of the vent.

Place Wall Thimble Shield Z58WTS against the Wall Thimble 1-3/4” above the Vent. Install the Wall Thimble Shield using [4] DT Screws.

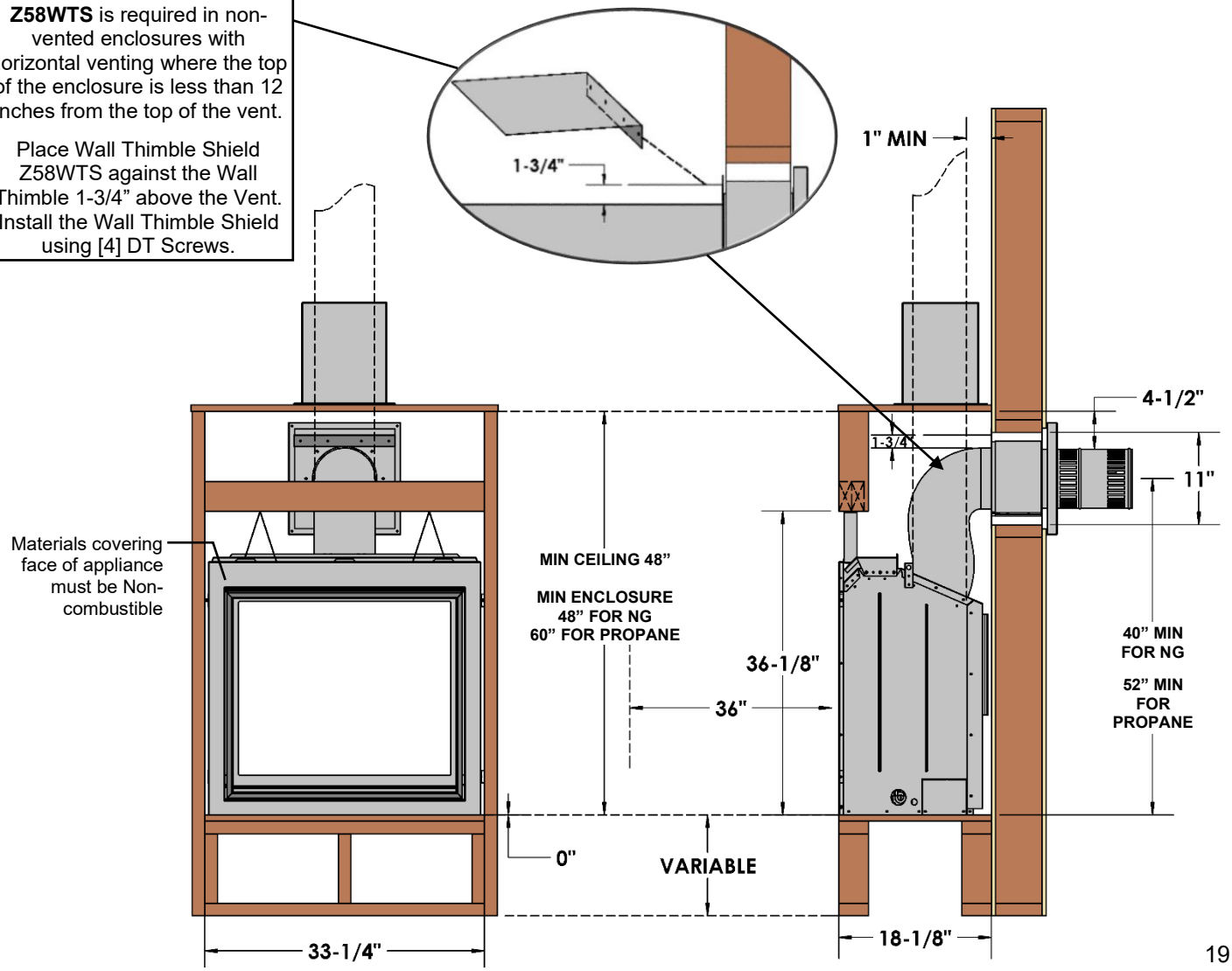

ZCV34 Facing Requirements- for Non-Vented Chase
Fireplace is installed As Shipped, with Ventilation Plates in place.

ANY MATERIALS COVERING THE FACE OF THE FIREPLACE MUST BE NON-COMBUSTIBLE (i.e. brick, stone, tile, concrete board).

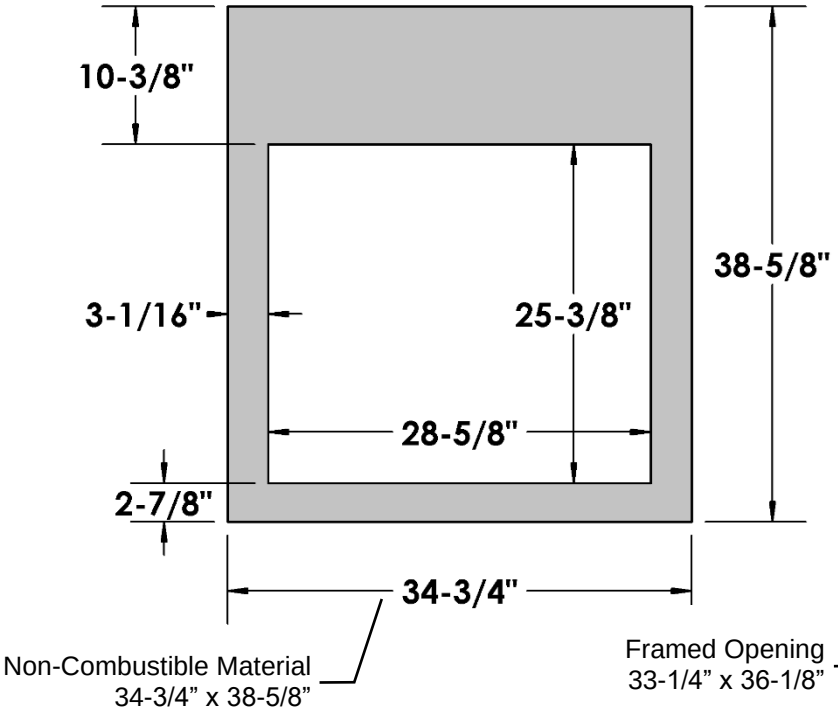

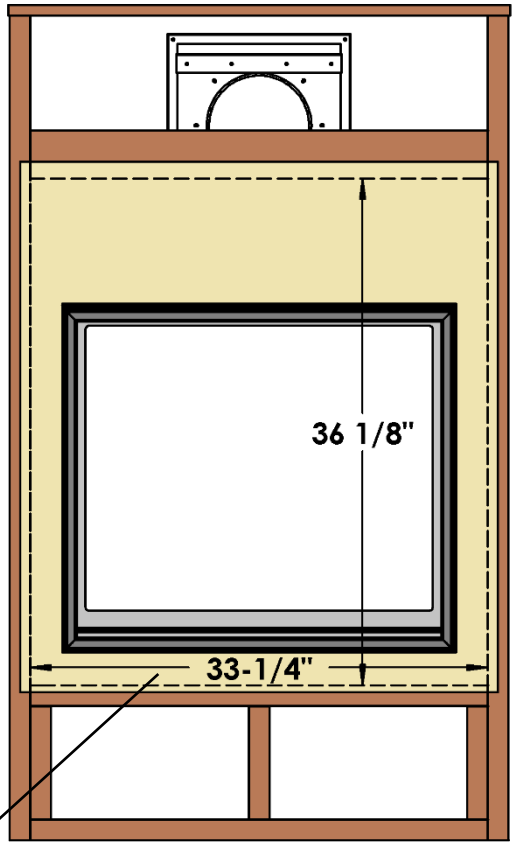

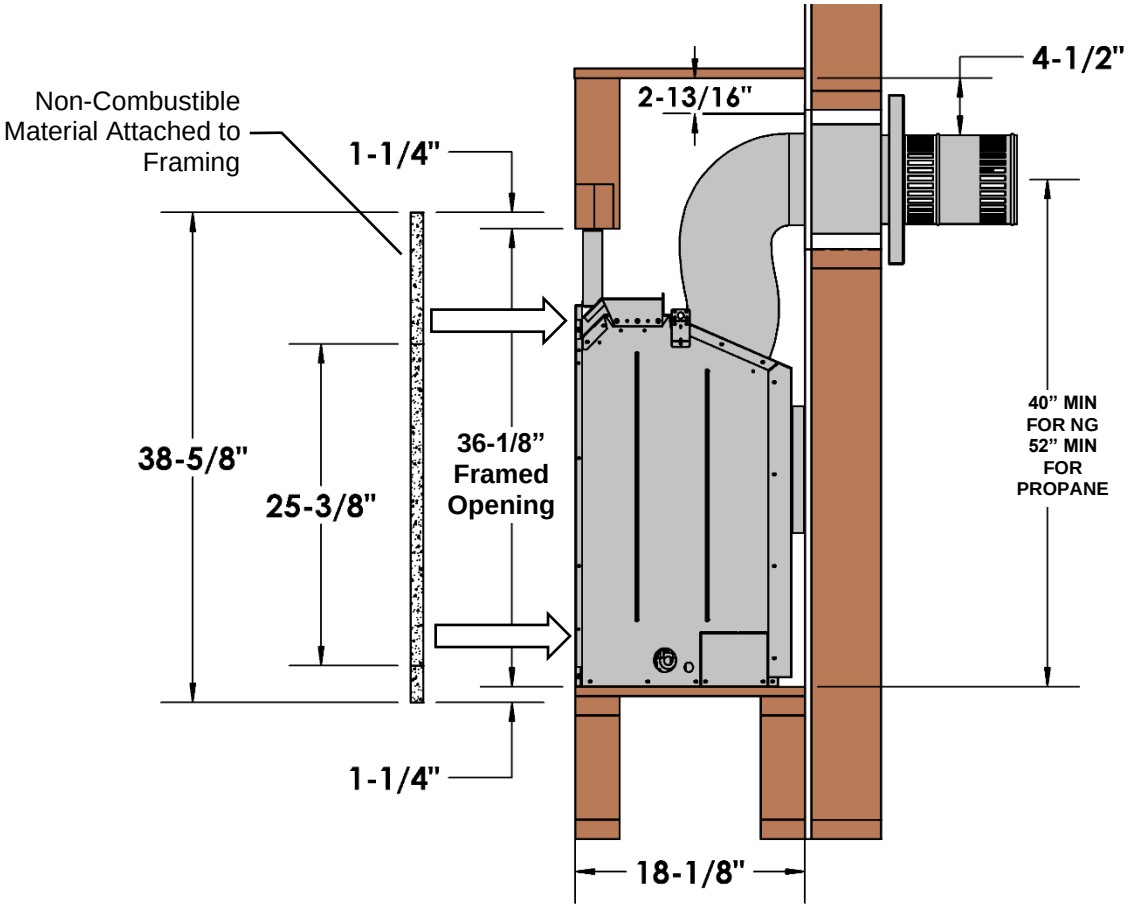

ZCV34 Framing Dimensions for Vented Chase with V34EG -OR- V34EGS Grills

Ventilation Plates must be removed before installation into a Vented Chase

Grills **MUST** be located at top of chase. Determine whether face of fireplace will be flush with framing or finished wall. Refer to Nailing Tab Guide also. **NOTE:** These structures are not load bearing.

No loose Combustibles (wood, wiring, etc.) are allowed inside the Chase area.

-Remove Ventilation Plates-
See ***Removal of Vent Covers*** on Page 14.

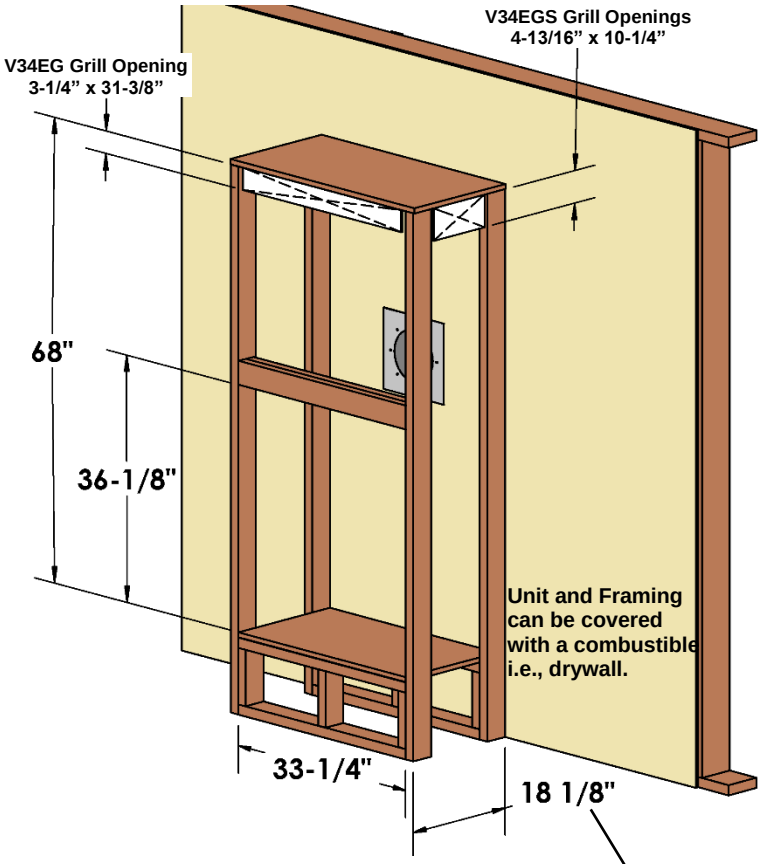

Framing Depth:
17-5/8" for 1/2" Drywall flush with face of unit.
18-1/8" for Framing flush with face of unit.

Vertical Venting MUST maintain 1" clearance to combustibles.

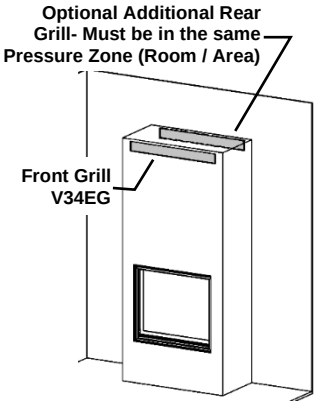

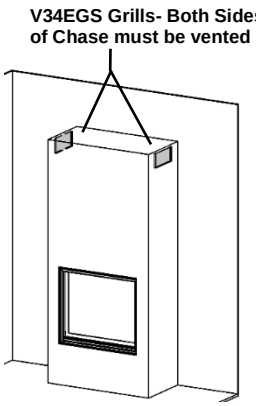

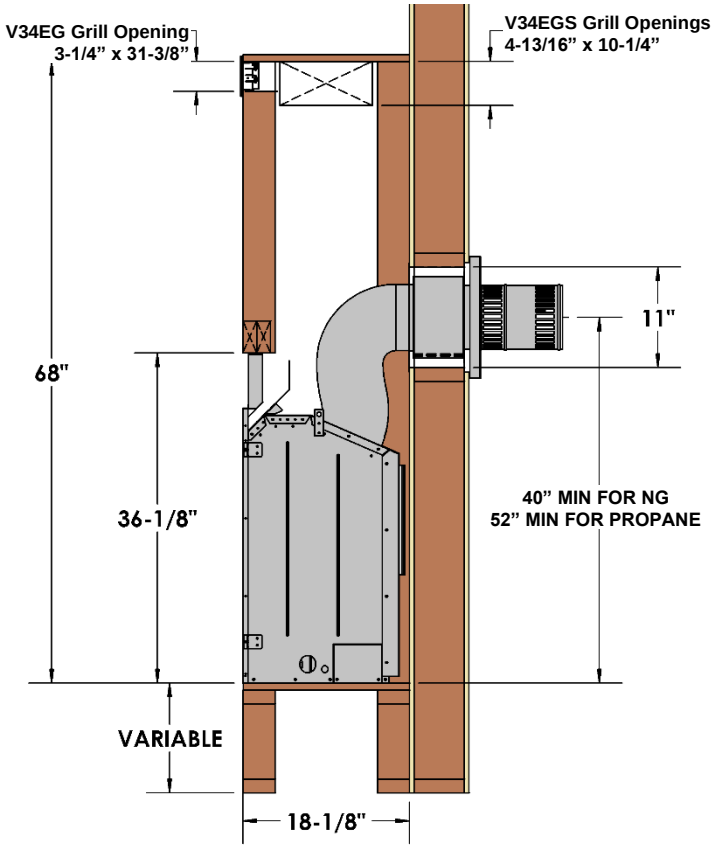

SIDE VIEW

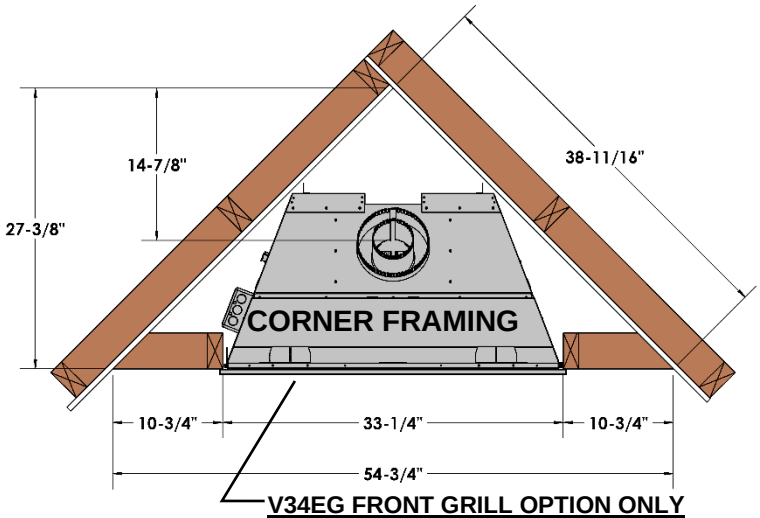

V34EG FRONT GRILL OPTION ONLY

NO SIDE GRILL OPTION FOR CORNER FRAMING

Fig.1
Framing for Horizontal Vent Termination
(See **Installation of Side Wall Venting** Section)

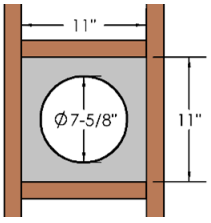

ZCV34 Framing Dimensions for Vented Chase (built outside of room) V34EG Grill

Ventilation Plates must be removed before installation into a Vented Chase

Grill **MUST** be located at top of chase. Determine whether face of fireplace will be flush with framing or finished wall. Refer to Nailing Tab Guide also. **NOTE:** These structures are not load bearing.

No loose Combustibles (wood, wiring, etc.) are allowed inside the Chase area.

-Remove Ventilation Plates-
See ***Removal of Vent Covers*** on Page 14.

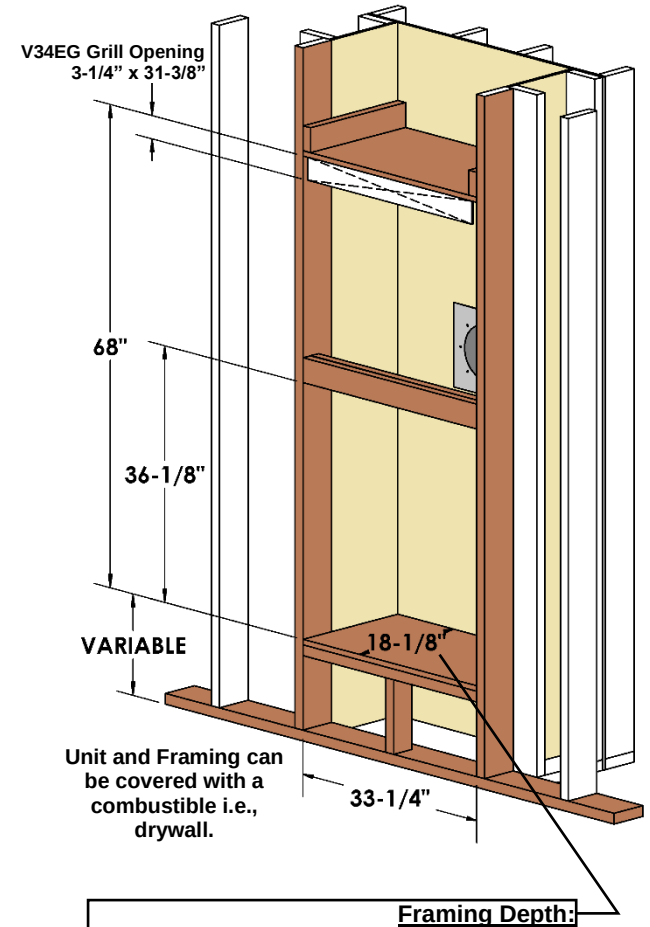

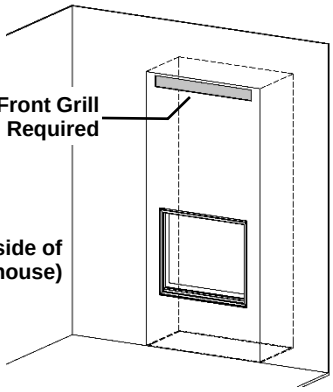

Framing Depth:
17-5/8" for 1/2" Drywall flush with face of unit.
18-1/8" for Framing flush with face of unit.

Vertical Venting MUST maintain 1" clearance to combustibles.

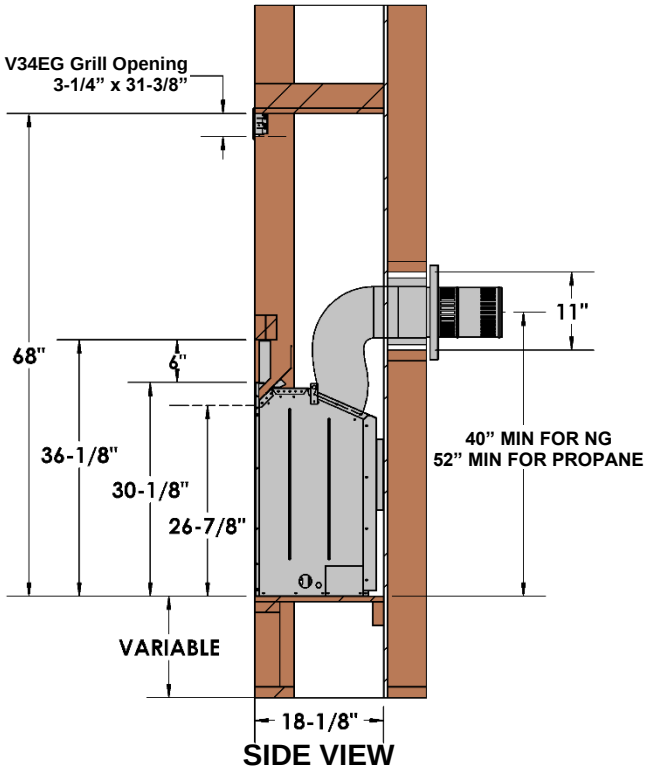

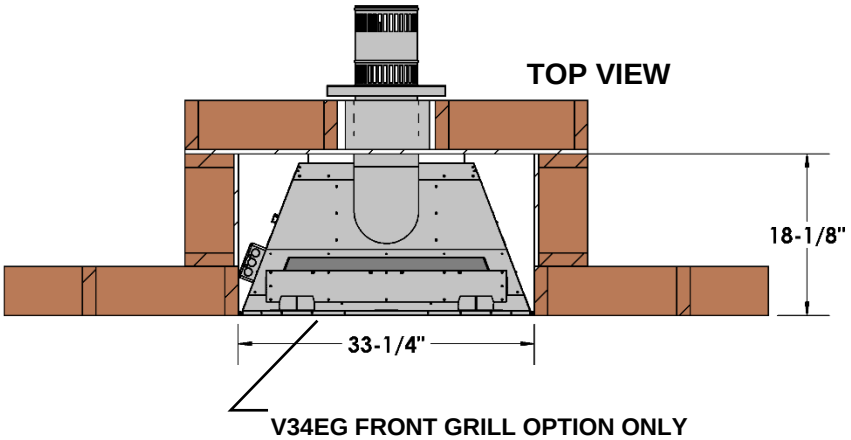

Fig.1
Framing for Horizontal Vent Termination
(See **Installation of Side Wall Venting** Section)

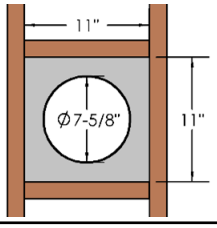

ZCV34 Framing Dimensions for Vented Chase with Open Top

Ventilation Plates must be removed before installation into a Vented Chase

Determine whether face of fireplace will be flush with framing or finished wall. Refer to Nailing Tab Guide also. **NOTE:** These structures are not load bearing.

-Remove Ventilation Plates-
See ***Removal of Vent Covers*** on Page 14.

No loose Combustibles (wood, wiring, etc.) are allowed inside the Chase area.

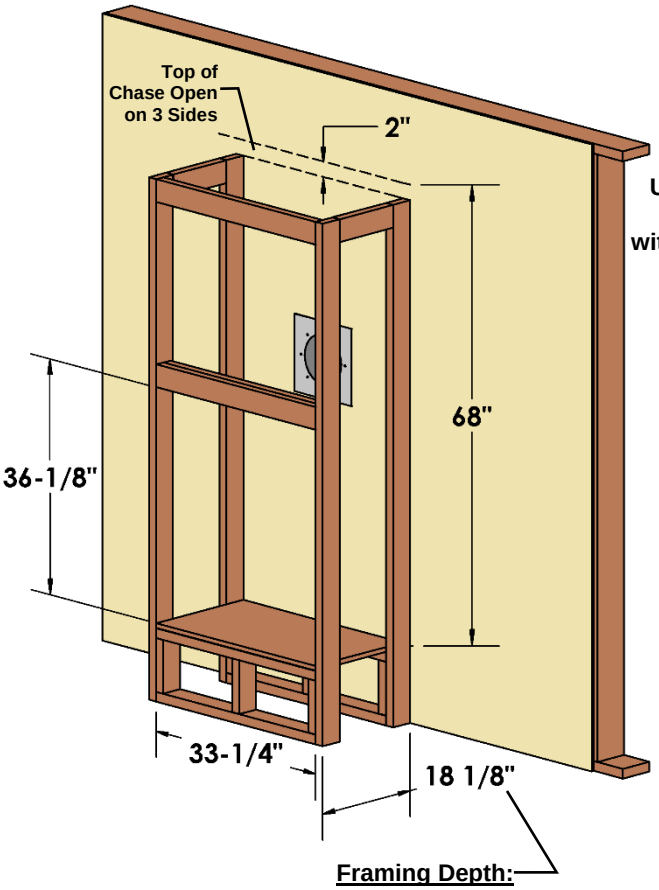

Unit and Framing can be covered with a combustible i.e., drywall.

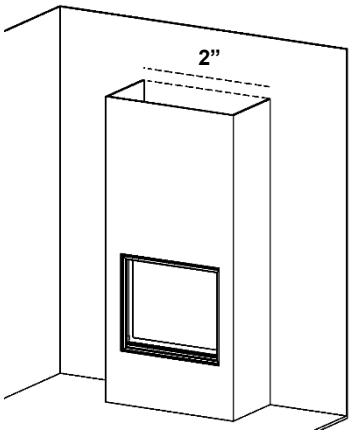

Framing Depth:

17-5/8” for 1/2” Drywall flush with face of unit.

18-1/8” for Framing flush with face of unit.

Vertical Venting MUST maintain 1” clearance to combustibles.

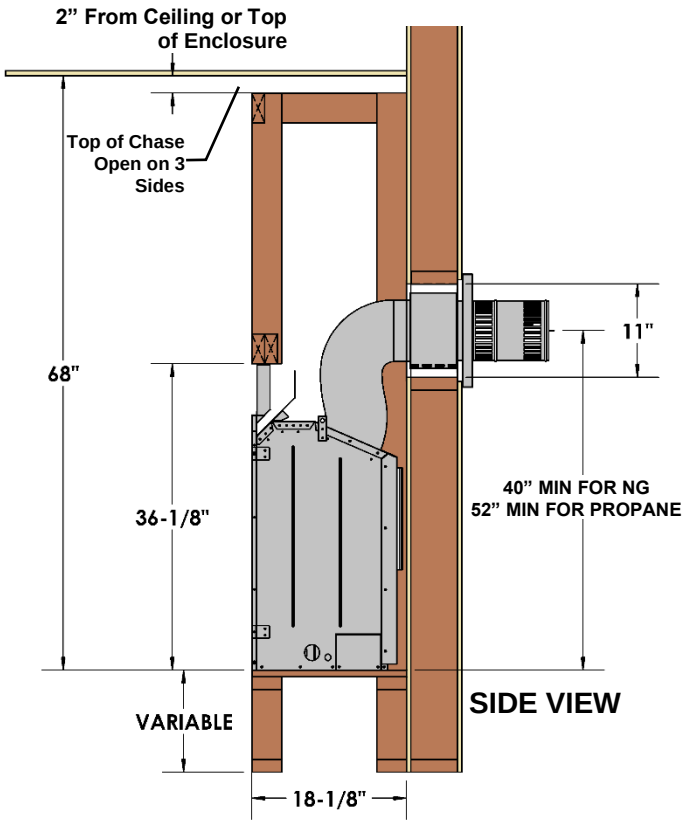

TOP OF CHASE MUST BE OPEN ON 3 SIDES

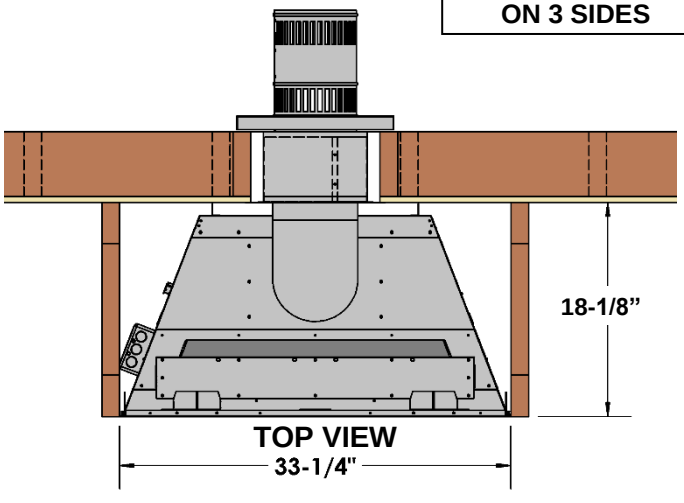

Fig.1
Framing for Horizontal Vent Termination
(See **Installation of Side Wall Venting** Section)

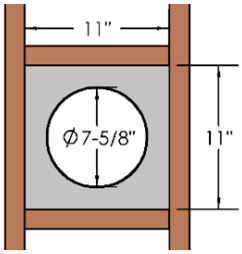

ZCV34 Framing Dimensions - Recessed Vented Chase - V34EG / V34EGS Grills

Ventilation Plates must be removed before installation into a Vented Chase

Grills **MUST** be located at top of chase. Determine whether face of fireplace will be flush with framing or finished wall. Refer to Nailing Tab Guide also. **NOTE:** These structures are not load bearing.

-Remove Ventilation Plates-
See ***Removal of Vent Covers*** on Page 14.

No loose Combustibles (wood, wiring, etc.) are allowed inside the Chase area.

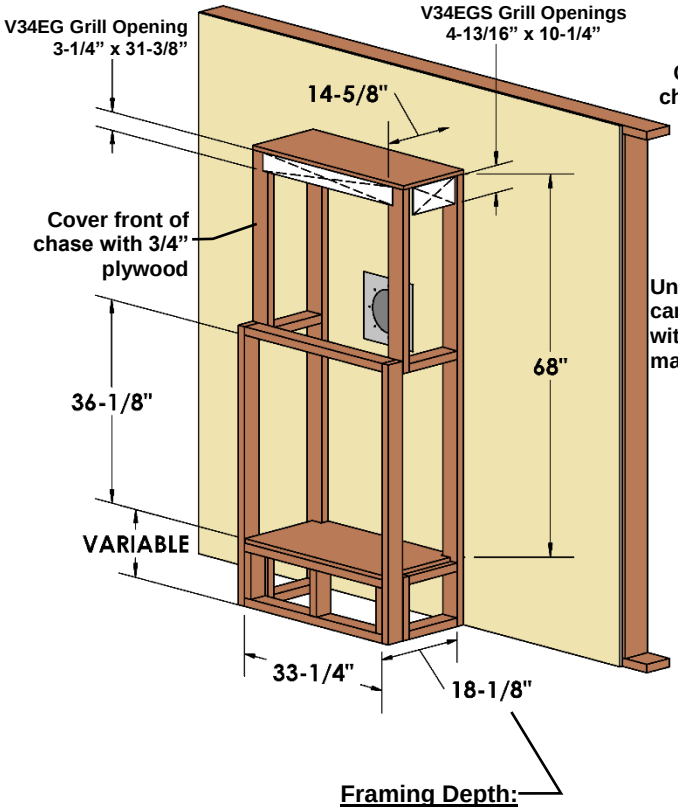

Framing Depth:

17-5/8" for 1/2" Drywall flush with face of unit.
18-1/8" for Framing flush with face of unit.

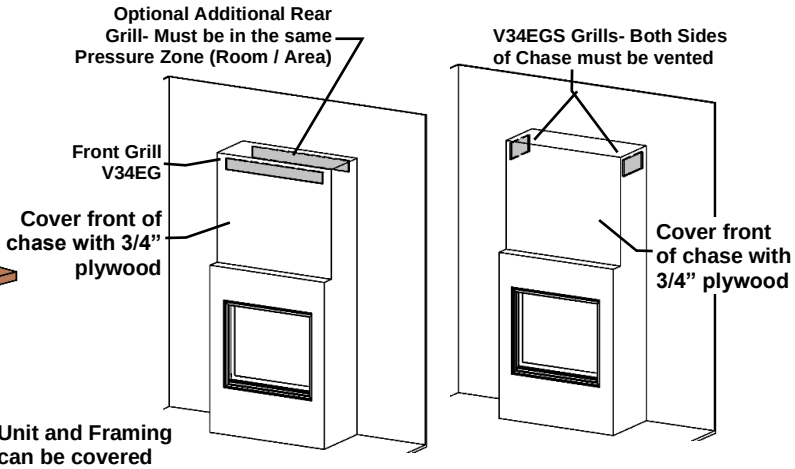

Unit and Framing can be covered with combustible materials.

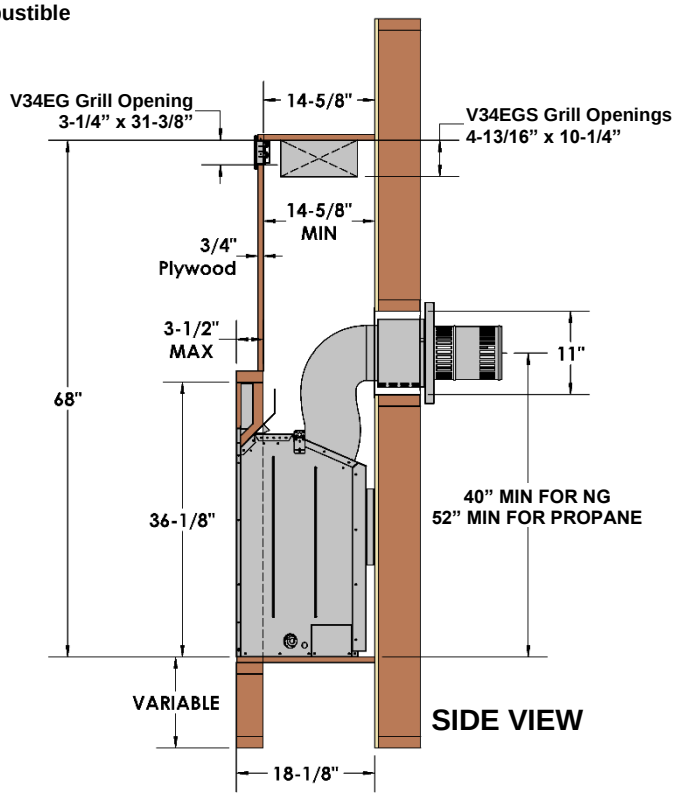

SIDE VIEW

Vertical Venting MUST maintain 1" clearance to combustibles.

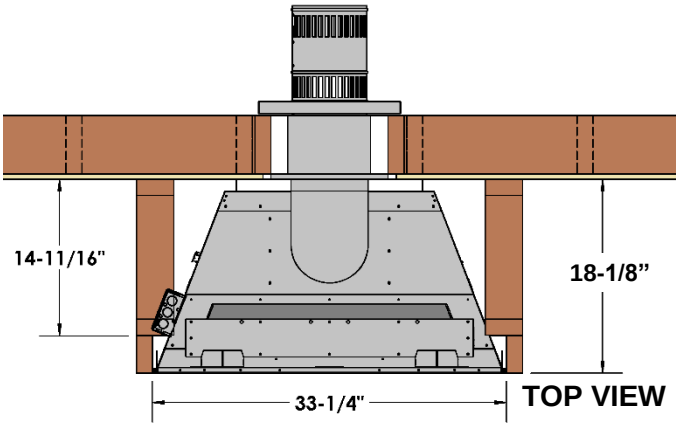

TOP VIEW

Fig.1
Framing for Horizontal Vent Termination
(See **Installation of Side Wall Venting** Section)

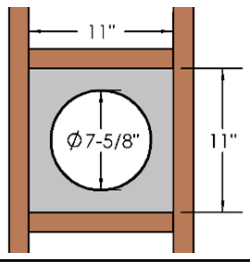

ZCV34 Framing Dimensions - Recessed Vented Chase with Open Top
Ventilation Plates must be removed before installation into a Vented Chase

Determine whether face of fireplace will be flush with framing or finished wall. Refer to Nailing Tab Guide also. **NOTE:** These structures are not load bearing.

-Remove Ventilation Plates-
See ***Removal of Vent Covers*** on Page 14.

No loose Combustibles (wood, wiring, etc.) are allowed inside the Chase area.

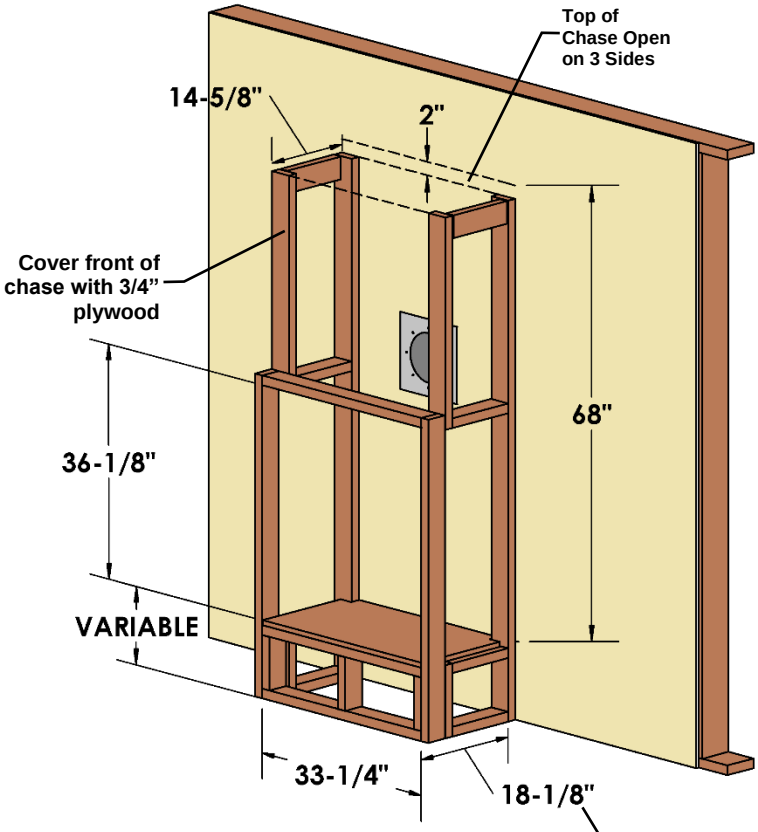

Framing Depth:

17-5/8" for 1/2" Drywall flush with face of unit.

18-1/8" for Framing flush with face of unit.

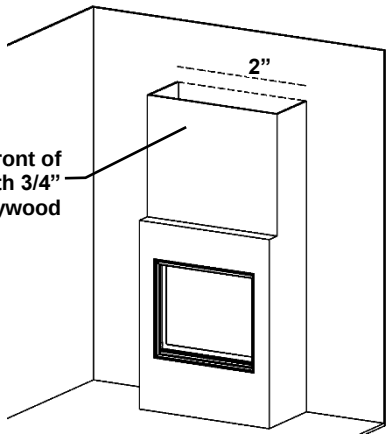

Unit and Framing can be covered with combustible materials.

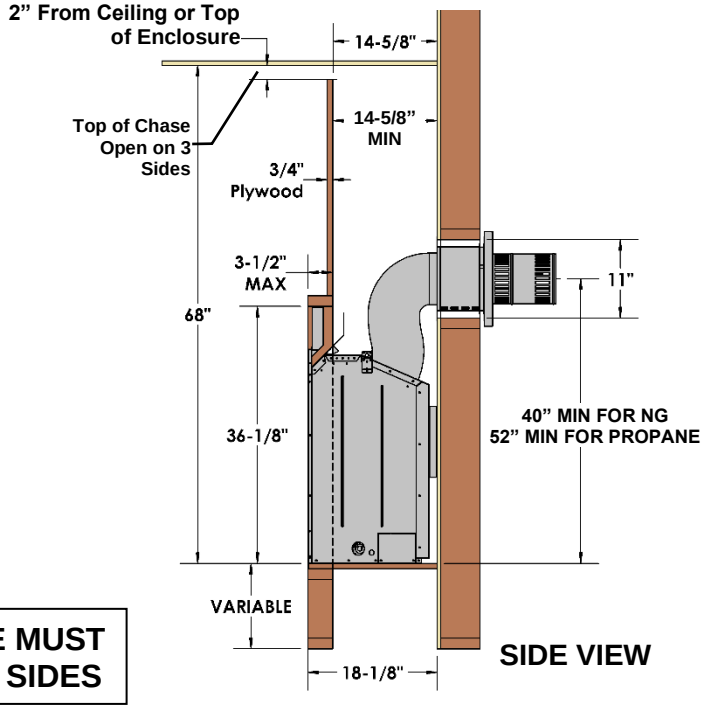

SIDE VIEW

Vertical Venting MUST maintain 1" clearance to combustibles.

TOP OF CHASE MUST BE OPEN ON 3 SIDES

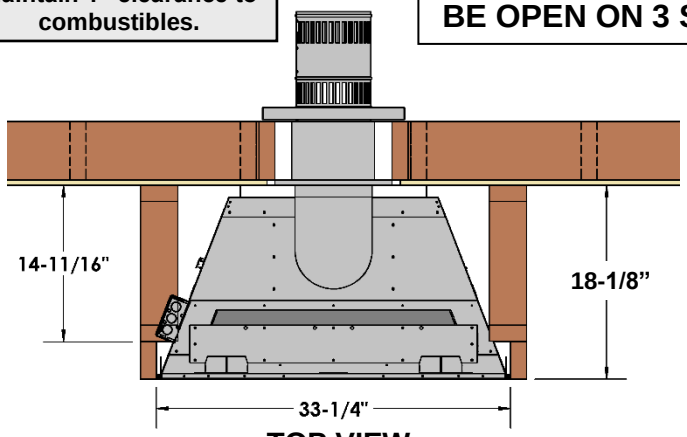

TOP VIEW

Fig.1
Framing for Horizontal Vent Termination
(See **Installation of Side Wall Venting** Section)

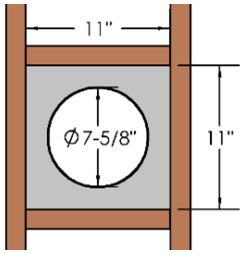

ZCV34 -Mantel Clearances- for Vented Chase

Ventilation Plates must be removed before installation into a Vented Chase

A ***Combustible Mantel*** can be placed immediately above the fireplace opening.

A ***Combustible Hearth*** can be placed immediately below the fireplace opening.

An ***Adjacent Side Wall*** may project directly from the side of the fireplace opening.

-Remove Ventilation Plates-
See ***Removal of Vent Covers*** on Page 14.

Right Side View

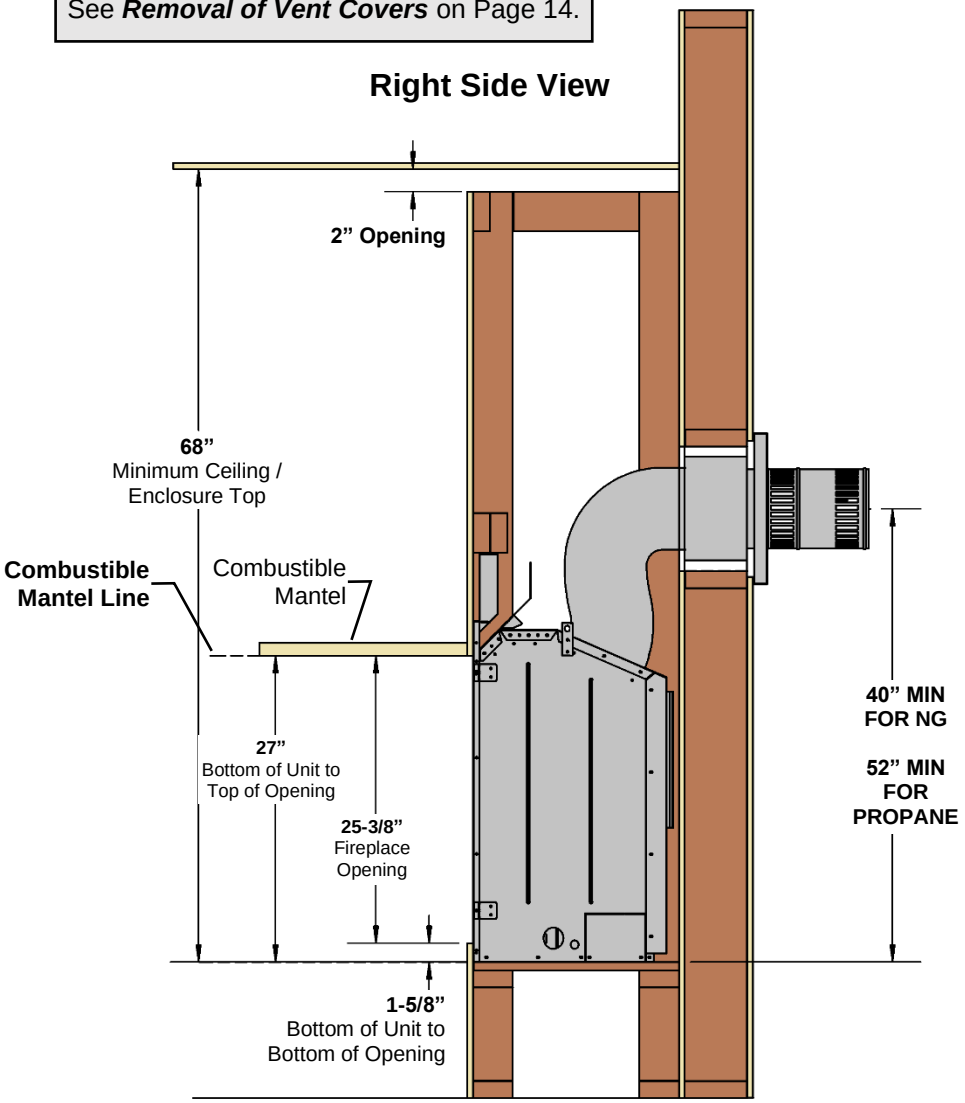

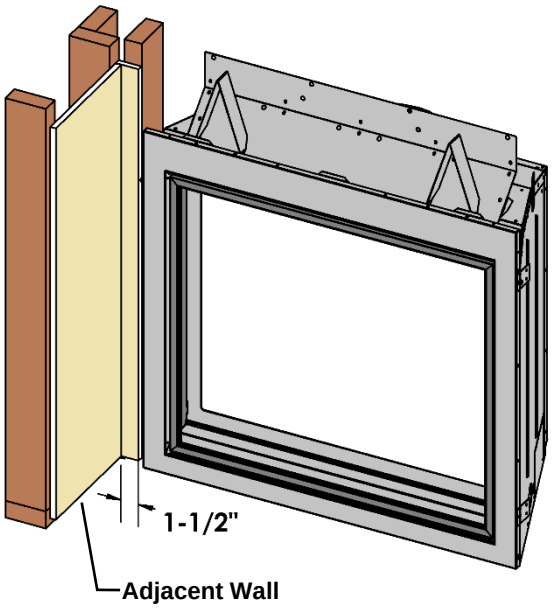

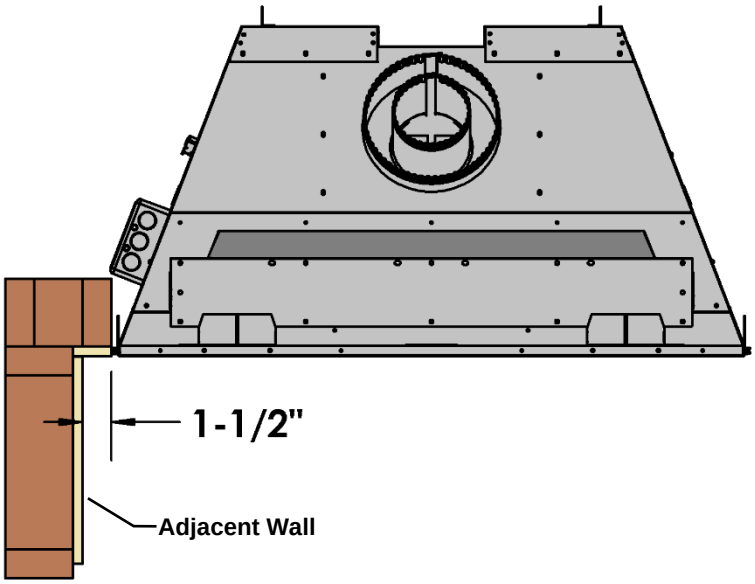

ZCV34 Clearance to Combustibles for Vented Chase
Ventilation Plates must be removed before installation into a Vented Chase

Front	36” [92cm]
Back (from Stand-offs)	0” [0cm]
Side (from Stand-offs)	0” [0cm]
Floor***** (See **Note**)	0” [0cm]
Minimum Ceiling / Enclosure Height (from bottom of fireplace)	68” [173cm] Natural Gas 68” [173cm] Propane
Top (from Stand-offs)	0” [0cm]
Adjacent Wall	1/1/2” [3.8cm]
Top of 90° Bend in minimum Enclosure	4-1/2” [11.43cm]
Top of 90° Bend inside Enclosures above minimum height	4-1/2” [11.43cm]
VENTING SYSTEMS	
Top of Horizontal Pipe	1/1/2” [3.8cm]
Side & Bottom of Horizontal Pipe	1” [2.5cm] All Vent Systems
Vertical Vent Pipe	1” [2.5cm] All Vent Systems

***Note:** If appliance is installed directly on carpeting or other combustible material other than wood flooring, a metal or wood panel extending the full width and depth of the appliance must be used. Carpet may extend 1 inch above the floor of the appliance.

Vinyl Flooring- Luxury Vinyl Plank (LVP), Luxury Vinyl Tile (LVT), and other vinyl flooring can be sensitive to radiant heat and changes in temperature. We recommend a minimum 12-inch hearth should be installed, or the fireplace should be raised at least 24 inches above the floor. **The use of vinyl flooring is done at the installer’s risk.**

-Remove Ventilation Plates- See ***Removal of Vent Covers*** on Page 14.

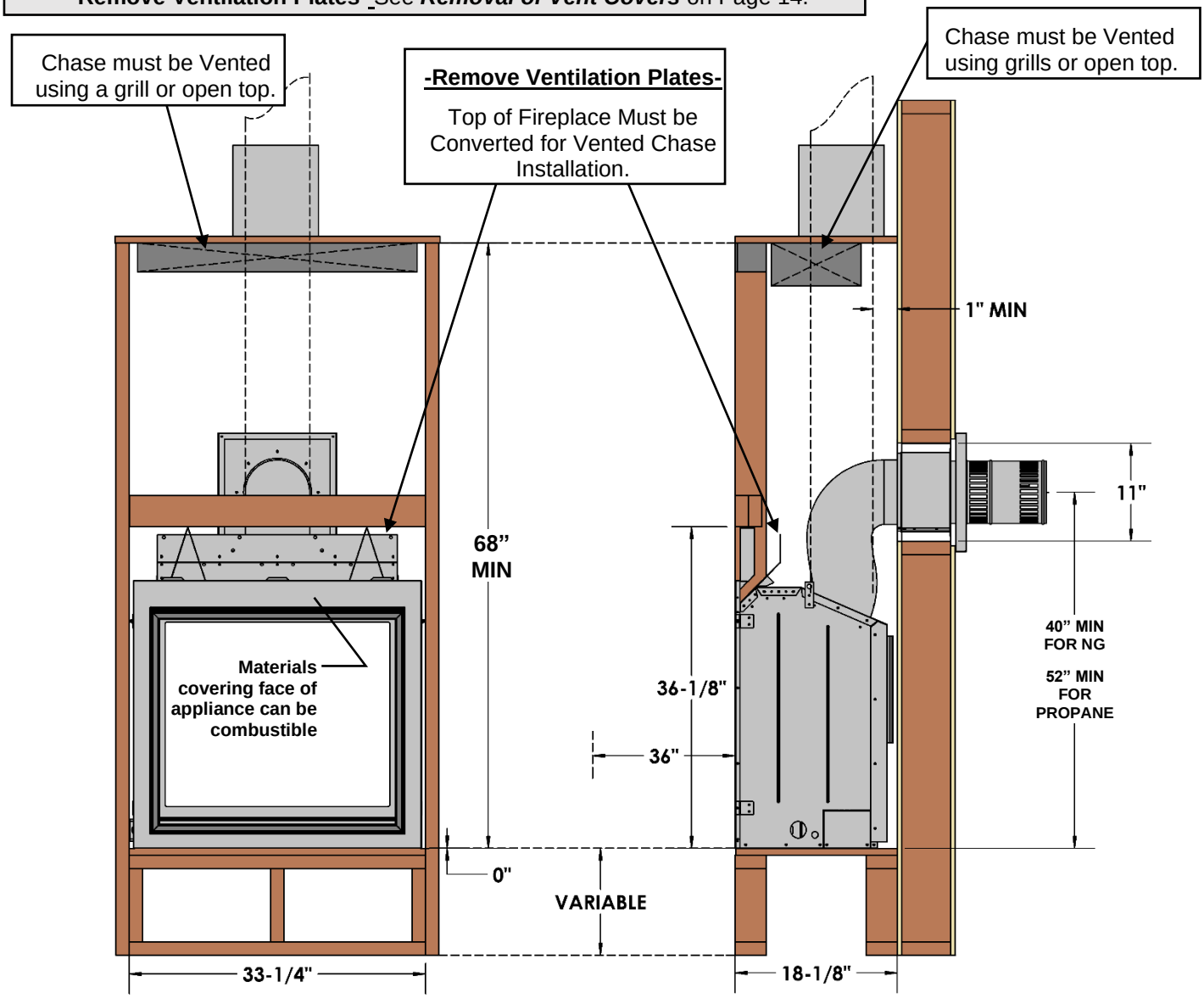

ZCV34 - Facing Requirements for Vented Chase -

Ventilation Plates must be removed before installation into a Vented Chase

Unit and Framing can be covered with a combustible i.e., drywall up to the fireplace opening.

NOTE:

- Fireplace chase must be vented at the top of the enclosure.
- Minimum Chase Height is 68” from bottom of unit.

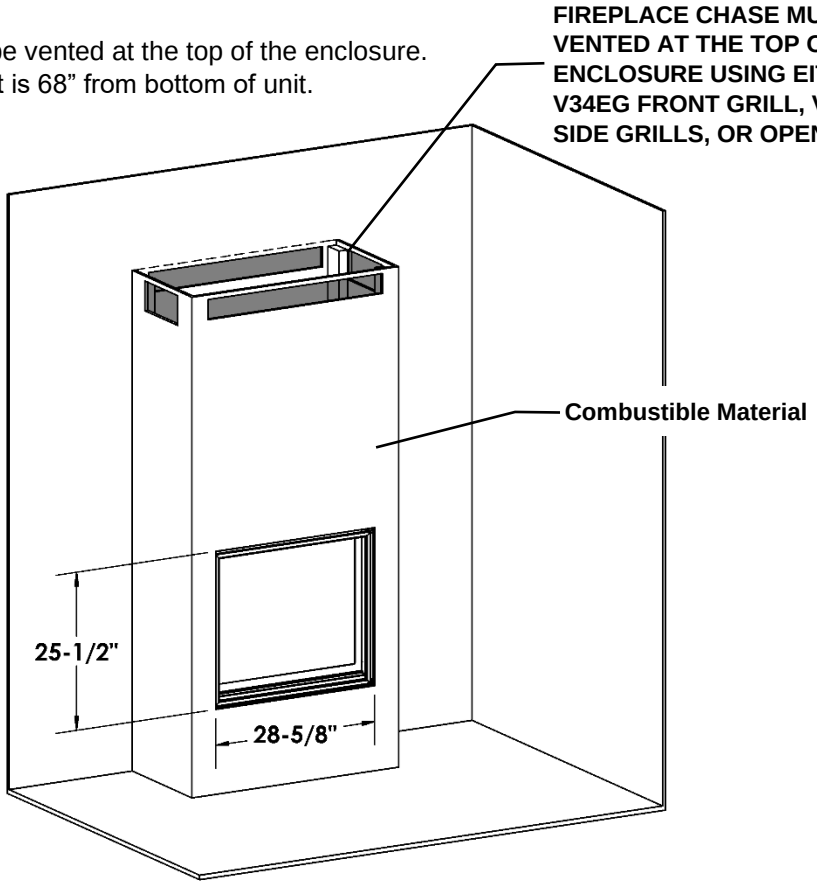

Ventilation Plates must be removed BEFORE installation into a Vented Chase.

See ***Removal of Vent Covers*** section in manual.

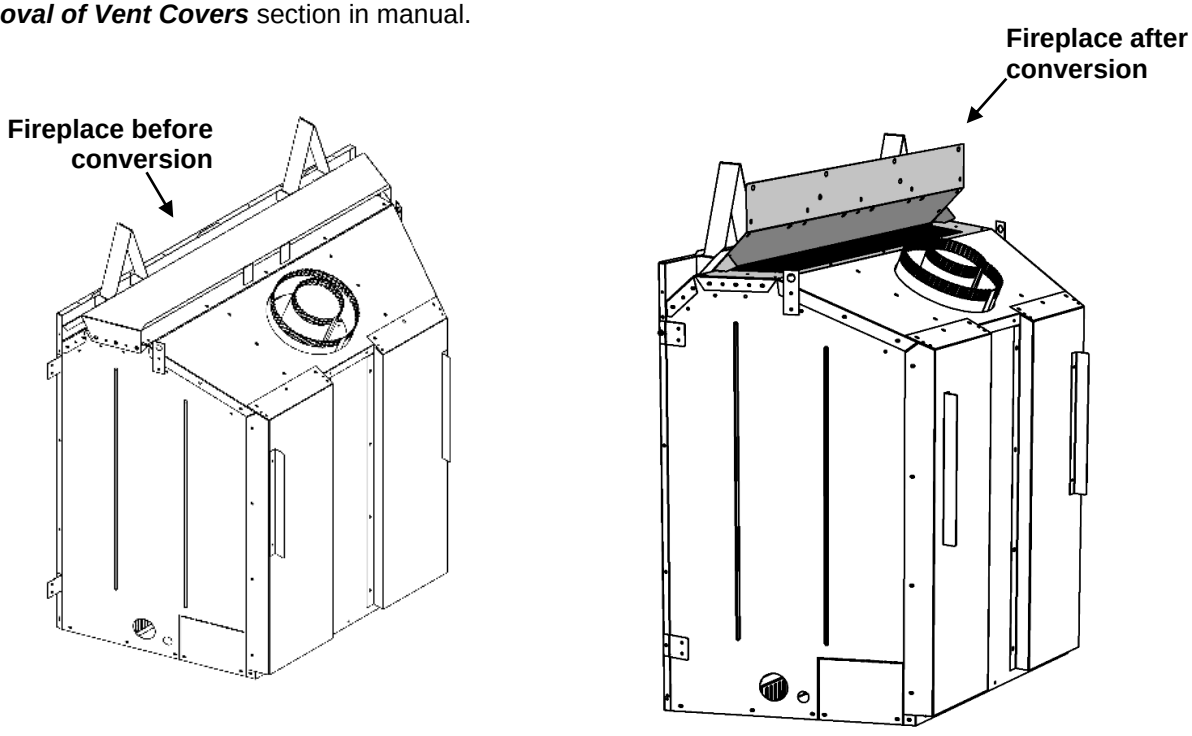

V34EG Grill Installation for ZCV34 Vented Chase -Option-

Ventilation Plates must be removed before installation into a Vented Chase

⚠ **Grill openings must be flush with the enclosure top. This is to prevent excess heat from becoming trapped in the top of the chase. See Framing section of manual.**

Parts List:

[1] Louver Grill (ready to paint)

This Grill Meets Minimum Opening Air Free Requirements.

Required Opening Dimensions: 31-3/8" wide x 3-1/4" tall x 1-3/4" deep.

Outer Trim Dimensions: 32-5/16" wide x 4-3/8" tall.

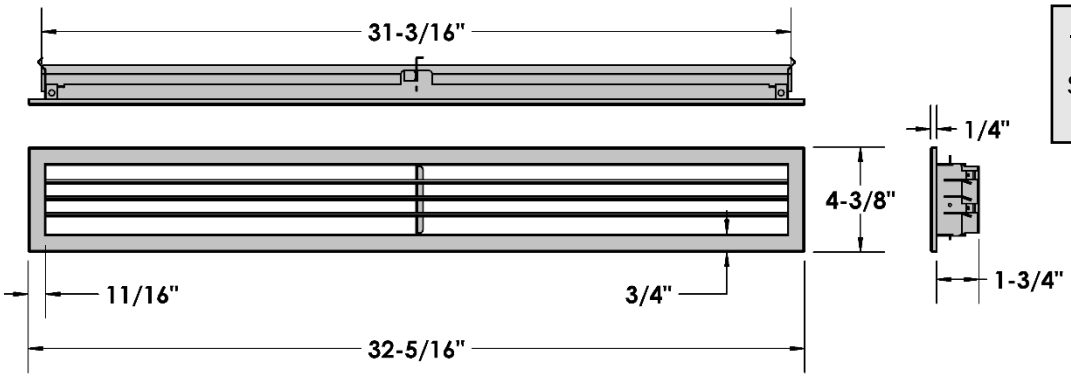

-Remove Ventilation Plates-
See ***Removal of Vent Covers*** on Page 14.

Installation: Insert Grill into opening and fasten to framing with a wood screw at each end.

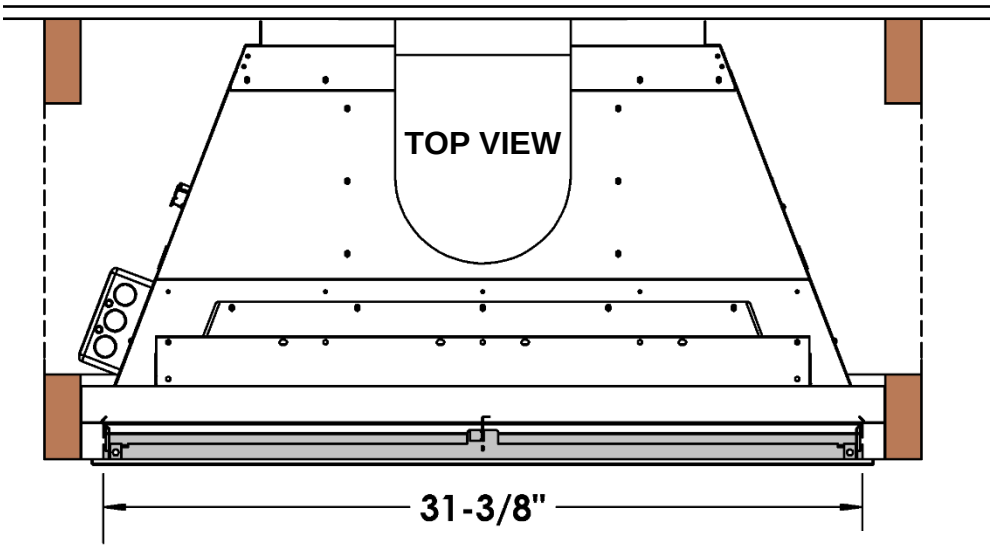

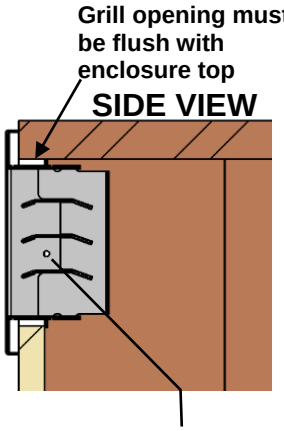

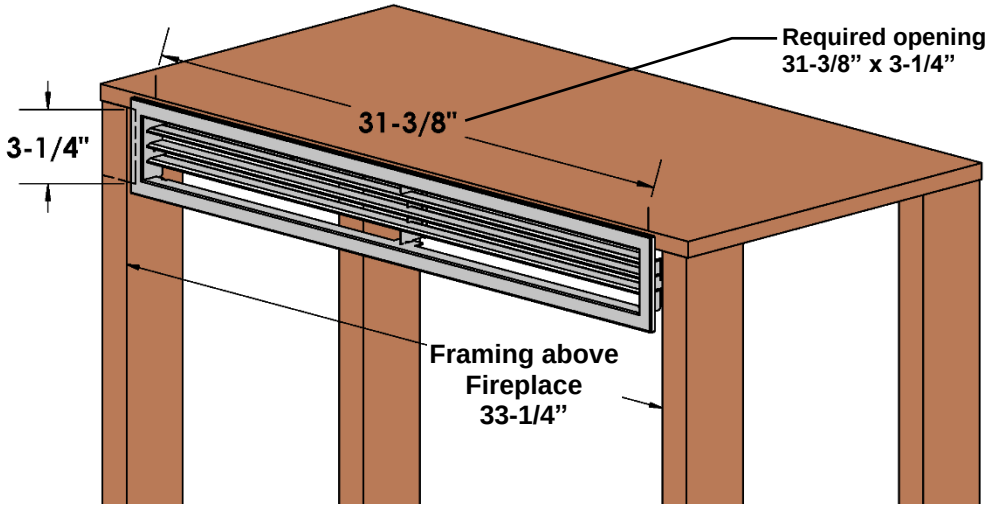

V34EGS Side Grill Installation for ZCV34 Vented Chase -Option-

Ventilation Plates must be removed before installation into a Vented Chase

⚠ **Grill openings must be flush with the enclosure top. This is to prevent excess heat from becoming trapped in the top of the chase. See Framing section of manual.**

Parts List:

[Qty 2] Side Grill assemblies (ready to paint)

Grills must be installed on both sides of chase.

Required Opening Dimensions: 10-1/4” wide x 4-13/16” tall

Outer Trim Dimensions: 11-1/4” wide x 6” tall

-Remove Ventilation Plates-

See ***Removal of Vent Covers*** on Page 14.

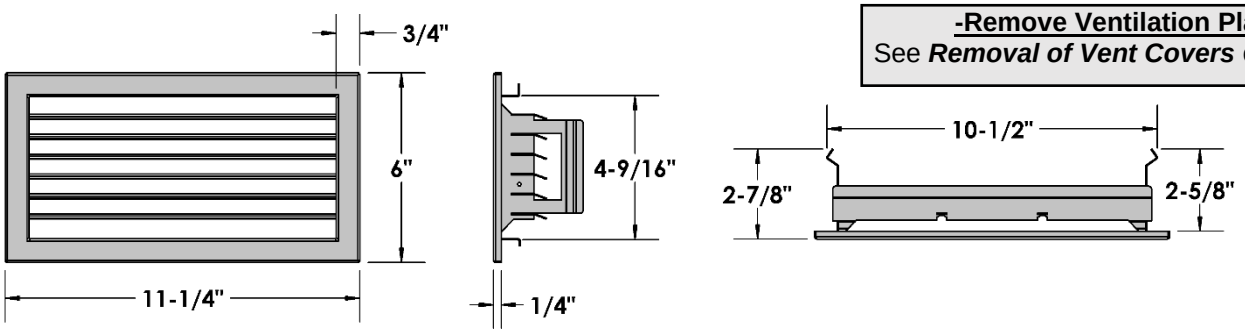

Installation: Insert Grills into openings and fasten to framing with a wood screw at each end.

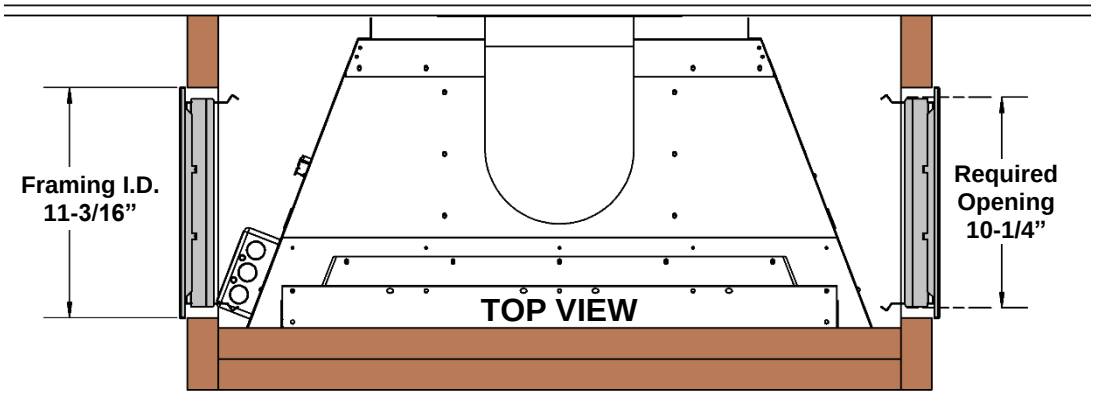

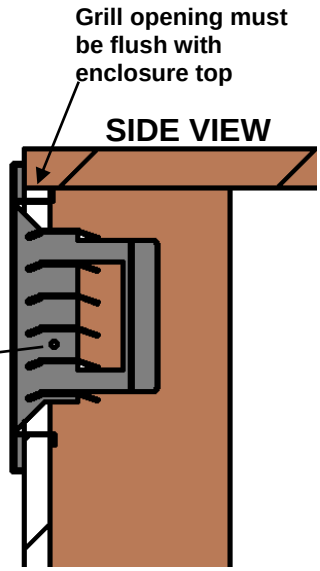

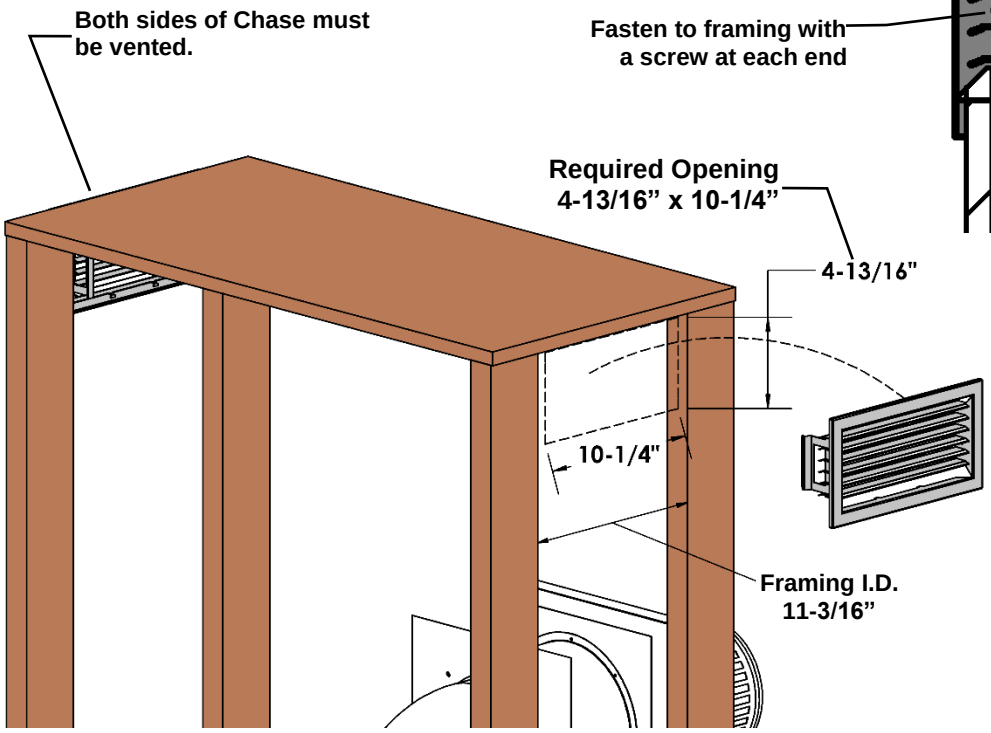

ZCV34 Door Installation and Removal

⚠WARNING: **Wait until unit is COMPLETELY cool before touching glass or attempting to remove or install Glass Door.**

To install Door:

1. Engage door in lower latches.

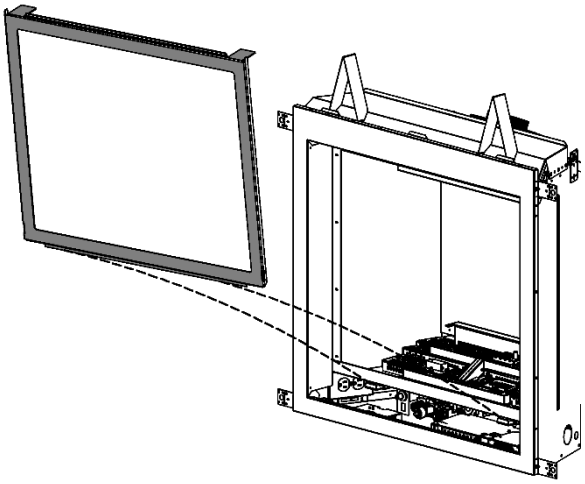



2. Swing door up and pull top latches over door lip at each corner.

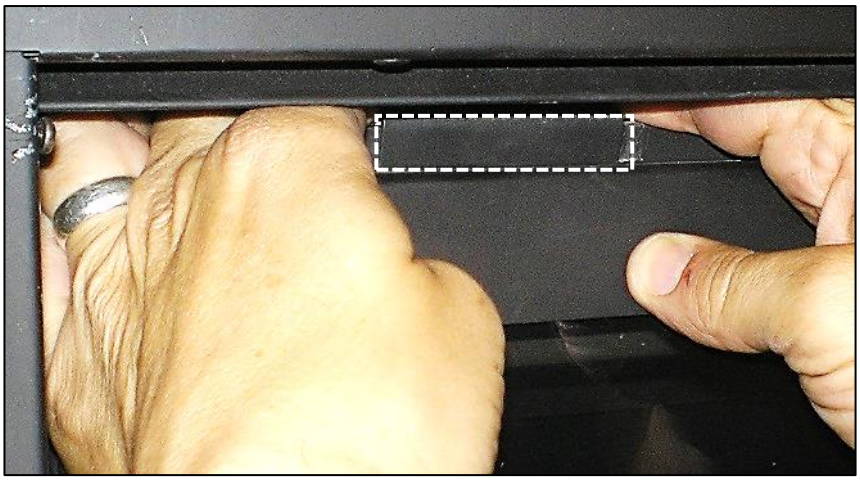

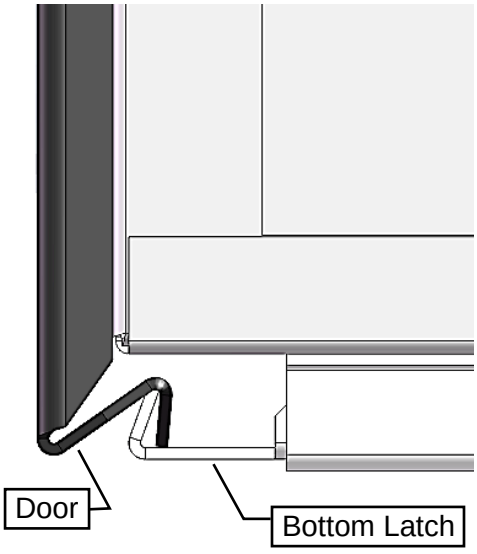

3. Replace Safety Screen Frame assembly.

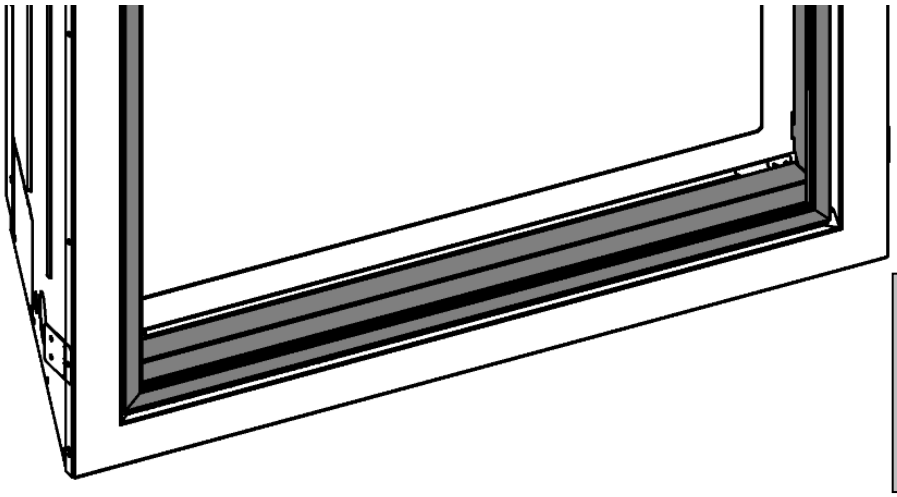

To remove Door:

1. **Remove Safety Screen.**
2. **Disengage Top Latches and lift from fireplace.**

ZCV34 Door and Glass Information

Glass Cleaning

It will be necessary to clean the glass periodically. During startup, condensation, which is normal, forms on the inside of the glass, and causes dust, lint etc. to cling to the glass surface.
Also, initial paint curing can deposit a slight film on the glass. It is therefore recommended that initially the glass be cleaned two or three times with a fireplace glass cleaner. After that, the glass should be cleaned two or three times a season depending on the circumstances.

⚠ Cautions and Warnings

- Do not clean when the glass is hot.
- The use of substitute glass will void all product warranties (see **Glass Replacement** in this section).
- Care must be taken to avoid breakage of the glass.
- Do not operate this fireplace without the glass front or with a broken glass front.
- Do not strike or abuse the glass.

Glass Replacement

ZCV34N, ZCV34NE, ZCV34NE2, ZCV34LP, ZCV34LPE, ZCV34LPE2 must use Low E tempered glass. Must be 5mm thick.
ZCV34NH, ZCV34NHE, ZCV34NHE2, ZCV34LPH, ZCV34LPHE, ZCV34LPHE2 must use Robax ceramic or coated Neoceram glass. Glass must be minimum 5mm thick.
To replace glass, clean all materials from the door frame. Scrape off old silicone all the way down to the metal. Using high-temp silicone [rated up to 500°F (260°C)] apply a continuous bead of approximately 1/8”-3/16” to all four [4] sides of the frame. With the frame resting on a flat surface, insert the new glass with a new gasket. Gently press the glass into the silicone. Be careful not to use excessive force on the glass. Let the silicone dry for approximately 15-20minutes.
Use caution when removing broken glass. Wear gloves.

Removal of the Glass Door

1. Remove the door by unlatching the 2 top latches. Simply place 2 fingers in the grooves, and pull and lift upward slightly.
2. Once the top of the door is unlatched, pull it outward and lower it to unlatch the bottom.
3. To re-install, place the Bottom Door Ledge into the 2 Lower Latch assemblies first. Then swing the door closed to seal it against the firebox cavity. Re-latch the Upper Latch assembly to secure the door to the appliance.

Spring Replacement

*Over time, the door latch springs (P/N# 36HB-123 for 51MQ-123A and P/N# 33IDV-123 for 26IDV-123A) may need to be replaced if tension is lost.

1. To replace latch spring, remove the 2 hex screws (located in the firebox) that secure the latch assembly in place.
2. Once the screws are removed the latches will slide out of place.
3. Remove the locknut from the latch assembly and replace the spring. Re-tighten the locknut until 2 thread turns are beyond the locknut. This is critical for proper tension. Replace latch assembly.

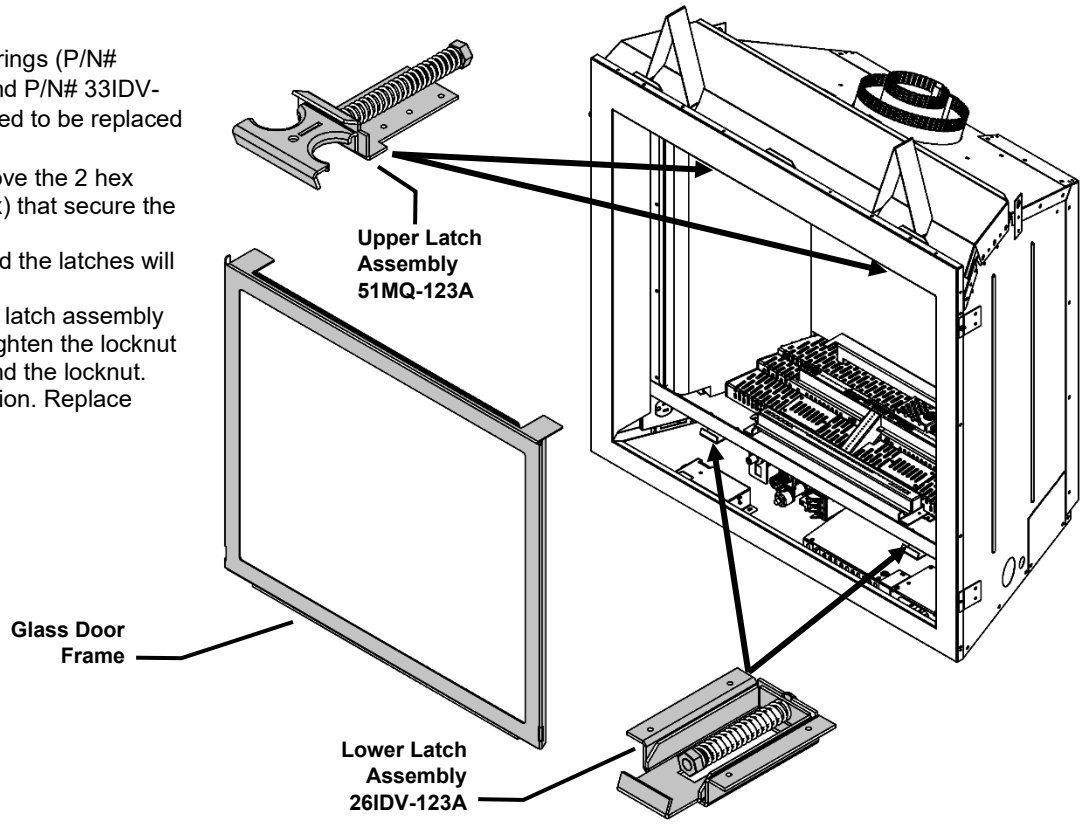

ZCV34 - Safety Screen Installation

SAFETY SCREEN IS SUPPLIED WITH FIREPLACE

⚠WARNING: Wait until unit is COMPLETELY cool before touching glass or attempting to install or remove Child Safety Screens.

To Install Screen: Insert Hooks on Safety Screen into Slots in Glass Door Frame.

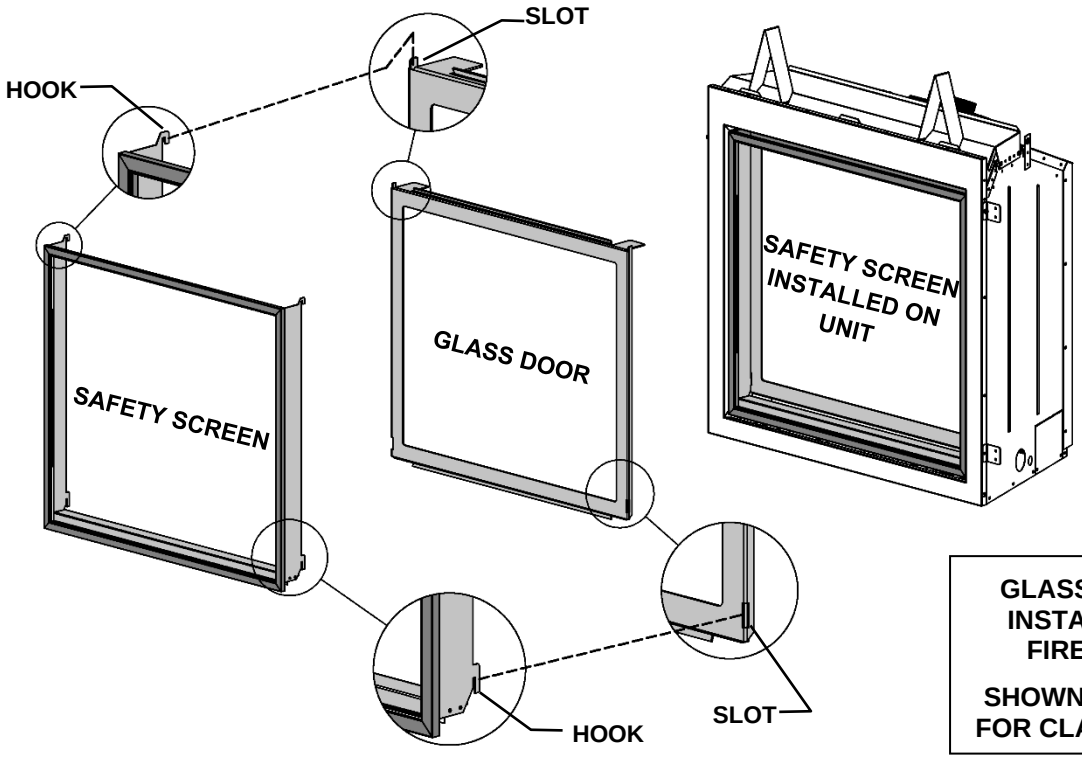

GLASS DOOR IS INSTALLED ON FIREPLACE.

SHOWN REMOVED FOR CLARITY ONLY

Procedure:

1: Engage Lower Hooks in Slots.



2: Raise Screen. Ensure that Lower Hooks remain engaged. Top Hook is directly above Slot.



3: Lower Screen. Watch both sides to ensure that Top Hooks engage properly.



To remove Safety Screens

WAIT UNTIL FIREPLACE IS COMPLETELY COOL.

Lift up on Safety Screen Frame and disengage Hooks in Safety Screen from Slots in Glass Door Frame.

ZCV34 IPI Component Locations

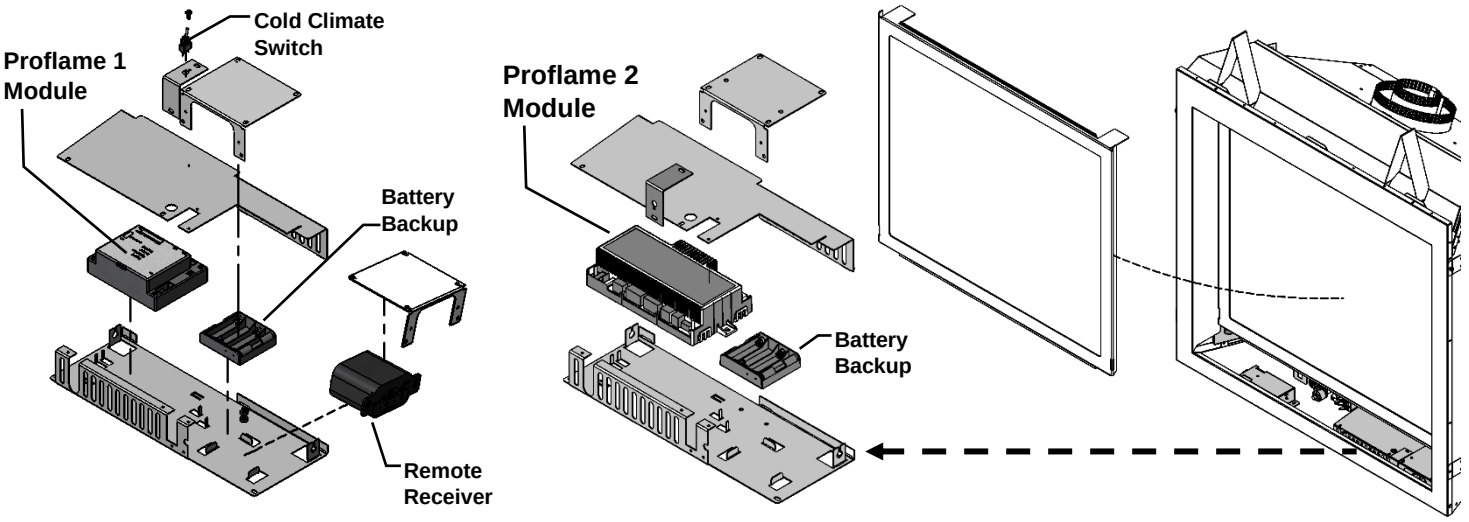

Component Box can be inserted & removed from beneath fireplace through opening below door (Remove glass door first).

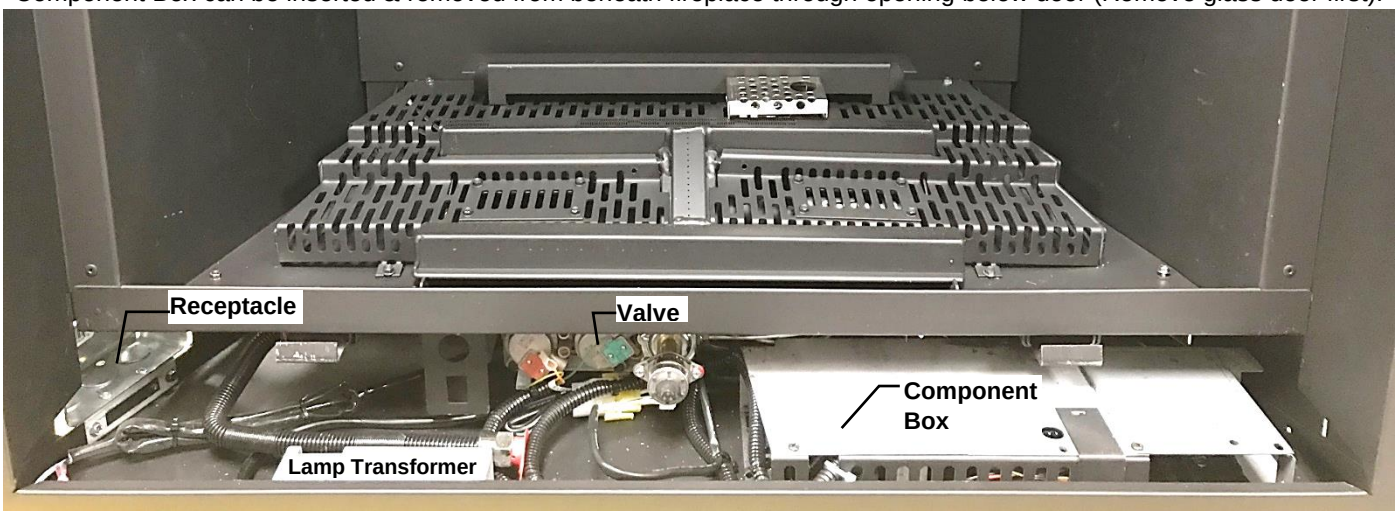

P2 Locations

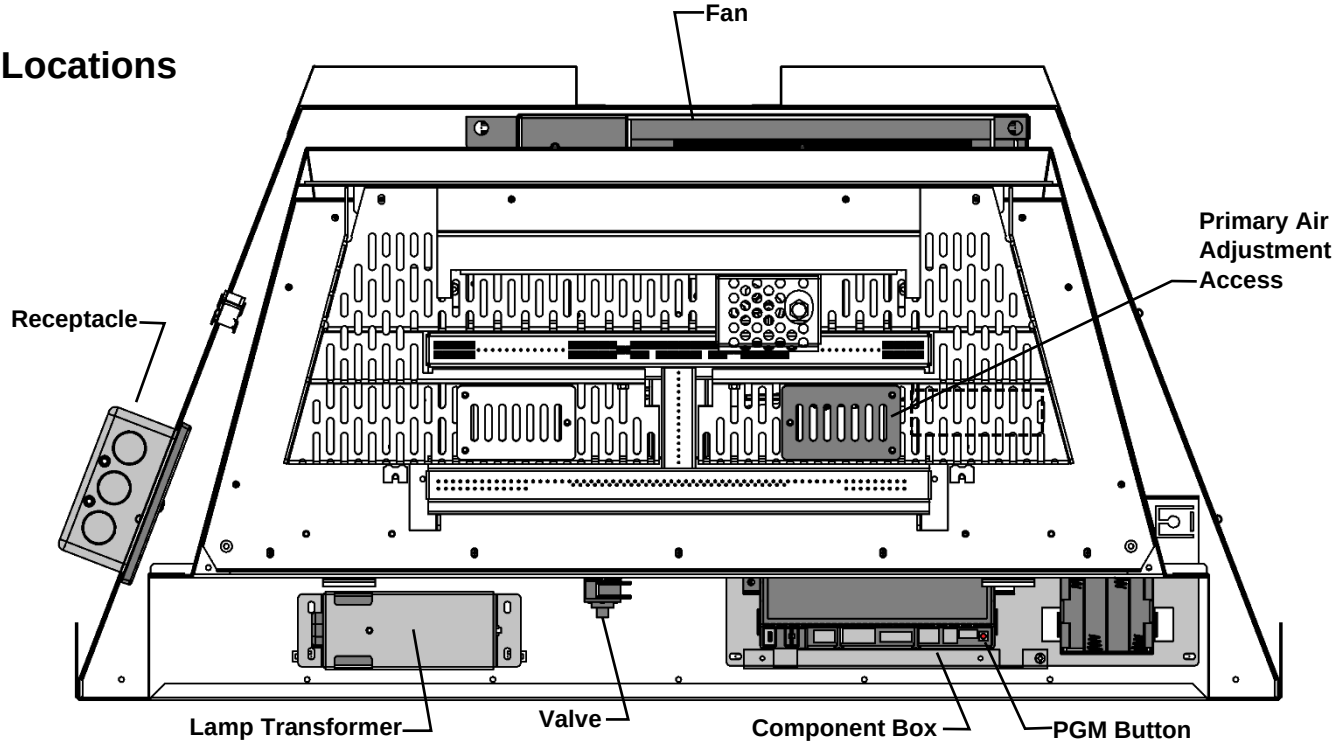

ZCV34 Tile Lip Kit (ZCV34TLK):

-1 Bottom Piece
-2 Sides
-1 Top Piece
- [Qty] 12 Pan Head DT Screws

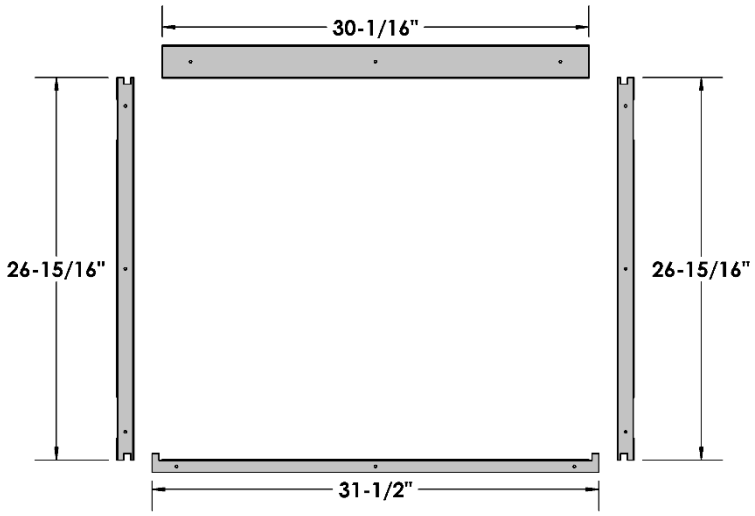

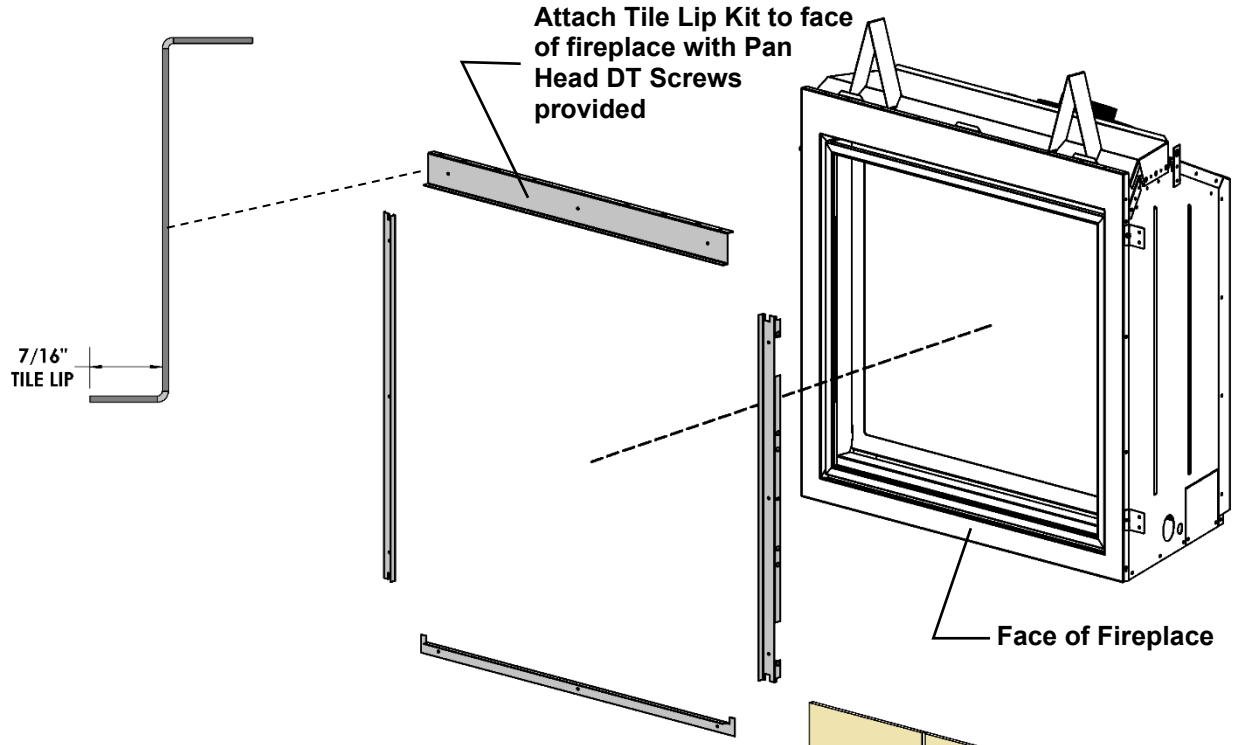

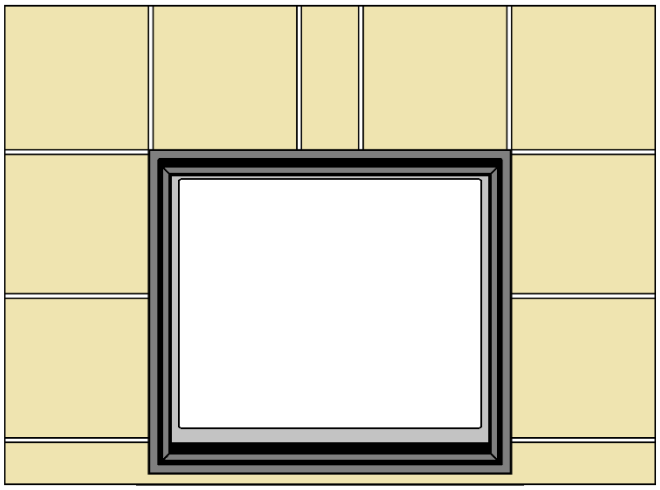

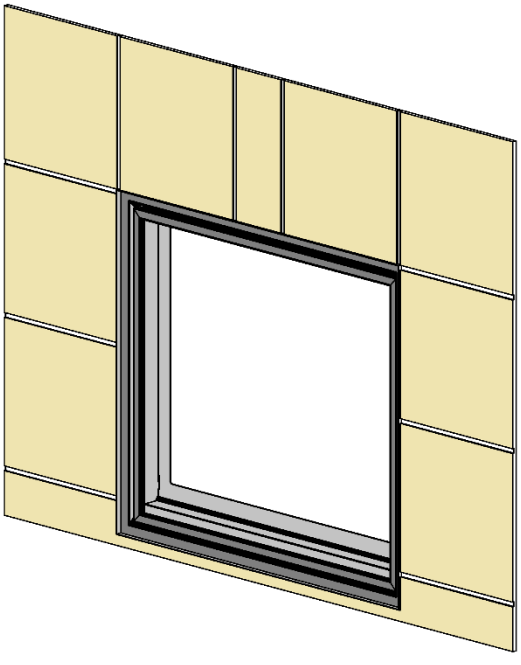

ZCV34S1 / ZCV34S1PF / ZCV34S2PF Surrounds — Option

Parts List: Surround, [4] Combo Screws (Black)

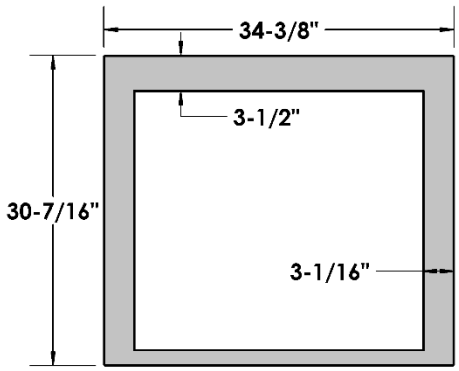

ZCV34S1

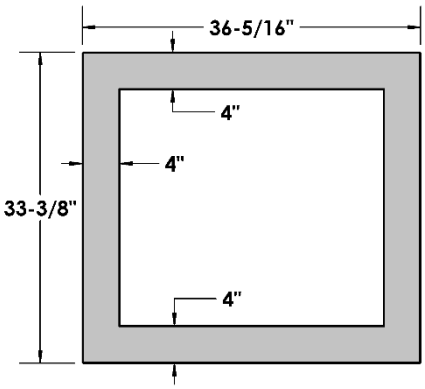

ZCV34S1PF

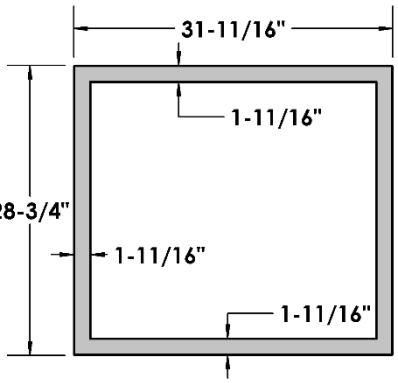

ZCV34S2PF

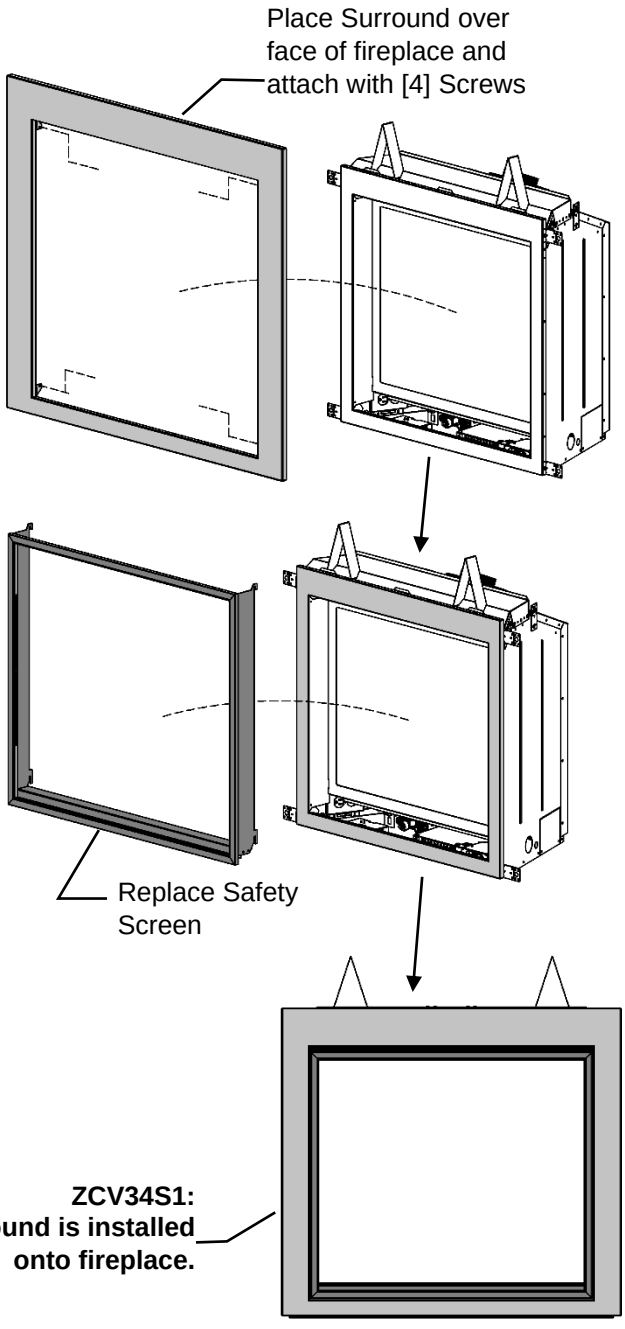

ZCV34S1PF:
Fireplace must be elevated Minimum 2-1/4" above floor

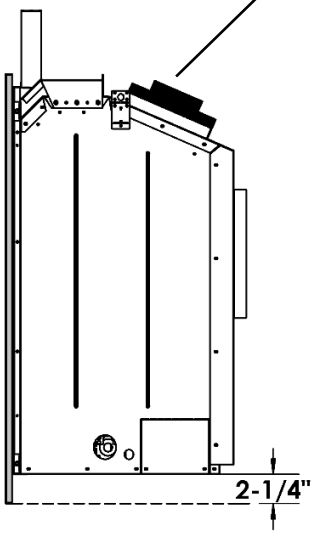

ZCV34S2PF:
11/16" Gap between Surround and Fireplace Face for Non-combustibles.

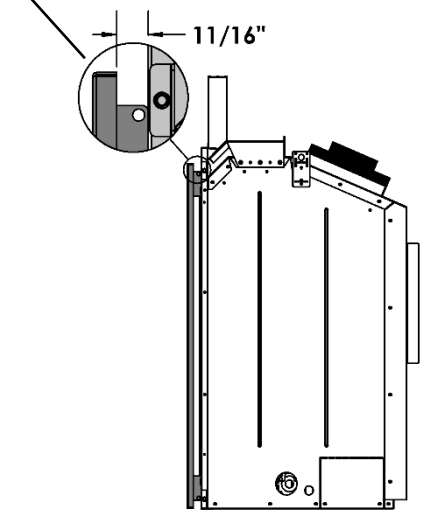

ZCV34 Z46FK Fan Kit Installation Option

The fan can be installed through the side of the fireplace if the fireplace is not yet installed.

If fireplace is already installed, the burner pan must be removed to install the fan. See ***Burner System Removal*** section.

Note: ZCV34 Proflame 2 units have fan factory installed.

⚠ WARNING

Electrical Grounding Instructions

This appliance is equipped with a three prong (grounding) plug for your protection against shock hazard and should be plugged directly into a properly grounded three-prong receptacle. Do not cut or remove the grounding prong from this.

Before Servicing

1. Ensure all power supply is shut off.
2. Label all wires prior to disconnecting when servicing control. Wiring errors can cause improper and dangerous operation.
3. For fan servicing: Vacuum and clean lint/dirt build-up on the fan blades and motor.
4. When resealing the Burner Pan, use Mill Pac.

STEP 1: Remove Media Tray (See ***Burner System Removal)***. Remove [6] DT Screws from Burner Pan (Shown Below). Do not remove Burner Pan.

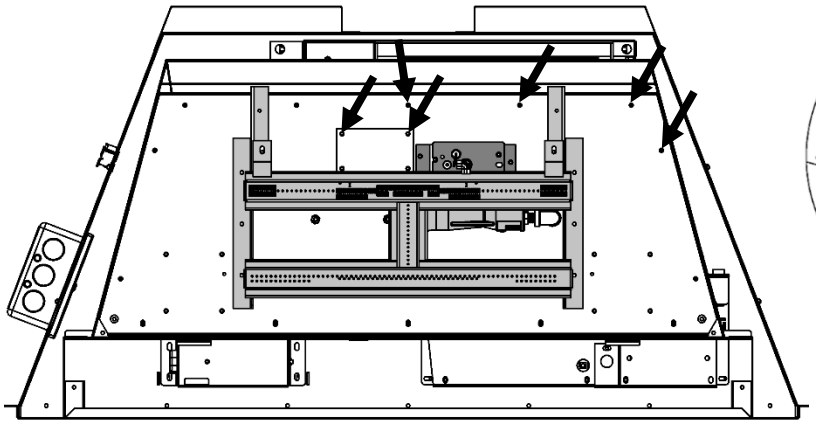

STEP 2: Install Fan Assembly through opening shown below. Mount fan on tabs in bottom of fireplace.

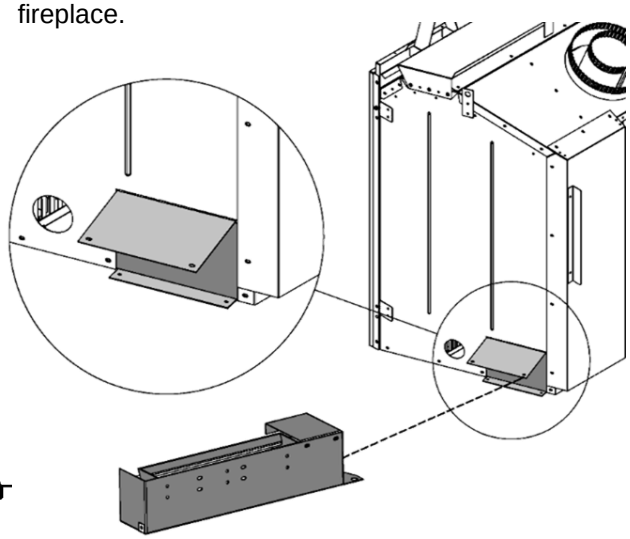

STEP 3: Connect fan as per wiring diagram below**. Replace all screws and components.**

NOTE: Do not allow cords or wires to come into contact with the firebox or the underside of the burner pan.

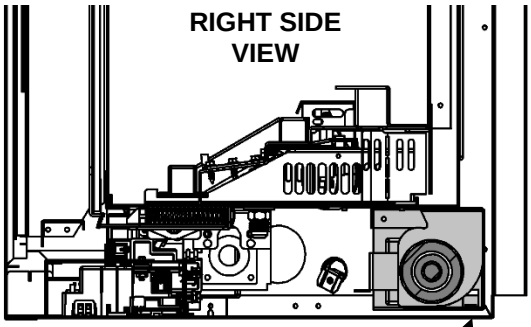

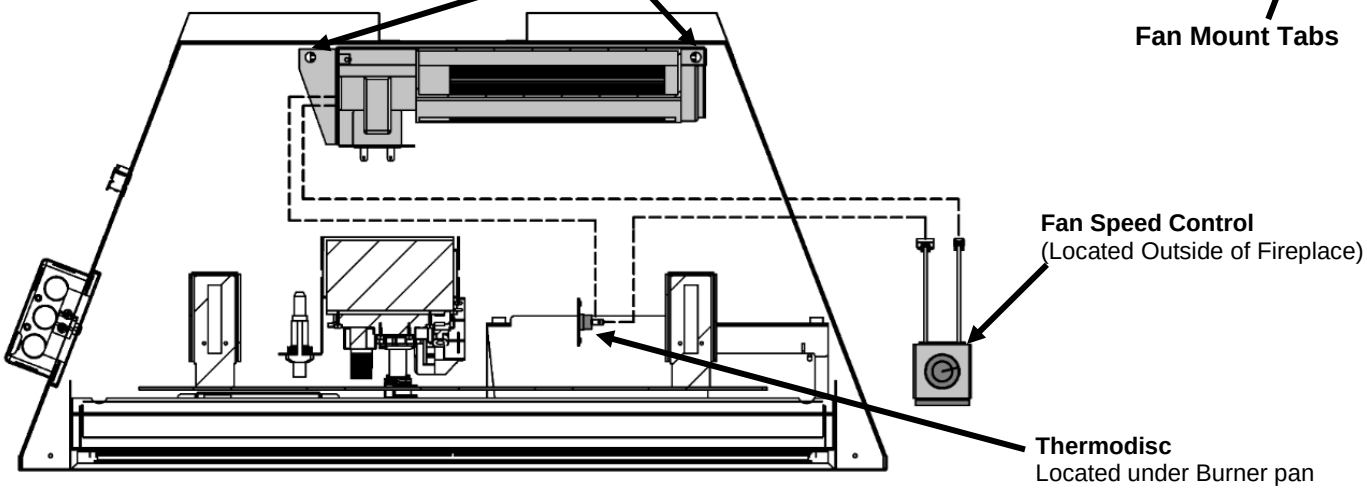

Split Receptacle- Fan Speed Control Outside of Fireplace

If you plan to locate the variable speed control switch for the fan outside of the fireplace and you require a constant source of AC power inside the unit for another accessory such as lights or an IPI valve system, follow one of the procedures below.

⚠WARNING	⚠WARNING	⚠WARNING
A qualified electrician must connect electrical wiring to junction outlet for built-in installation. **Follow all codes.**	Electrical Grounding Instructions – This appliance is equipped with a three – pronged (grounding) plug for your protection against shock hazard and should be plugged directly into a properly grounded three-prong receptacle.	Label all wires prior to disconnection when servicing controls. Wiring errors can cause improper and dangerous operation. Verify proper operation and servicing.

⚠**Caution**: Electrical installation to be done by a qualified installer. All wires must be connected and grounded in accordance with CSA Standard C22.1- Canadian Electrical Code part 1 or with the National Electrical Code, ANSI /NFPA 70 (latest edition) and /or in accordance with local codes.

Switch Controlled Split Receptacle With Switch At START Of Cable Run

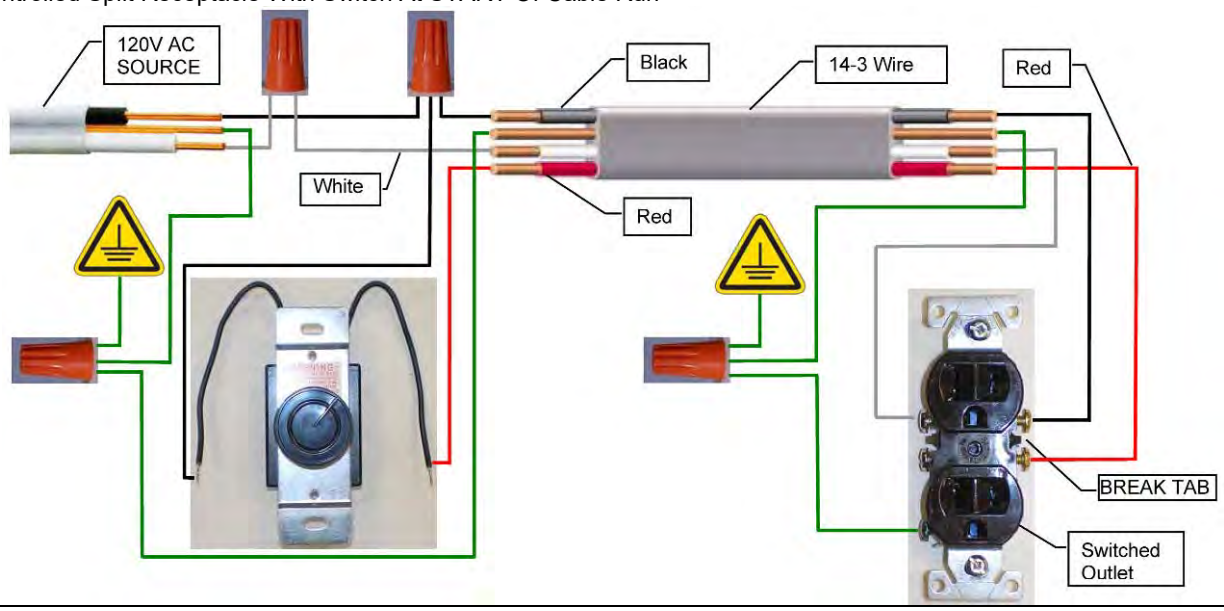

Switch Controlled Split Receptacle With Switch At END Of Cable Run

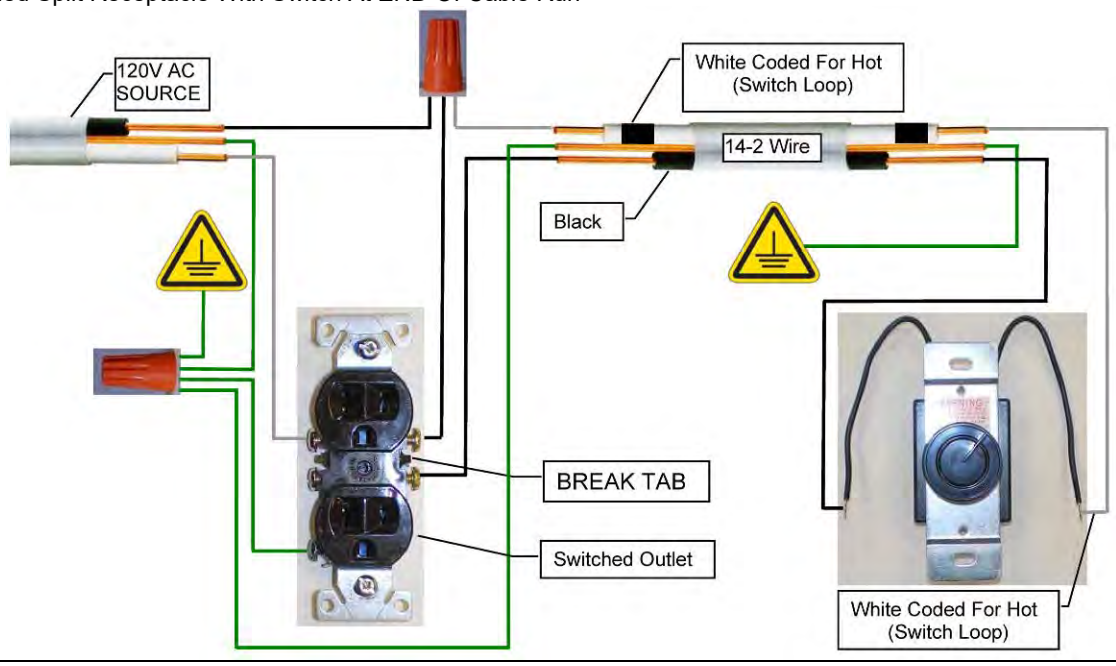

ZCV34 Proflame 2 Units - ULK5-2 Halogen Lights - Factory Installed

Please follow the current ANSI/NFPA 70 National Electrical Code in the USA and CAN/CSA C22.1 Canadian National Electrical Code in Canada.

Contents of Kit:
- [2] 12V Halogen Lamps
- Lamp Plate with Insulated Studs & wiring
- 12VAC Transformer with wire connectors

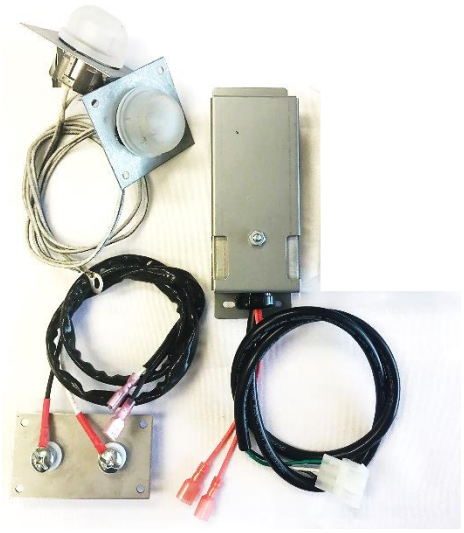

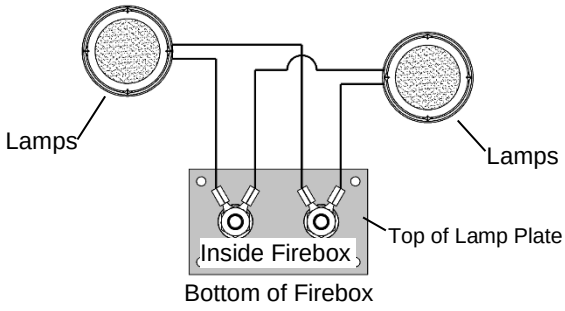

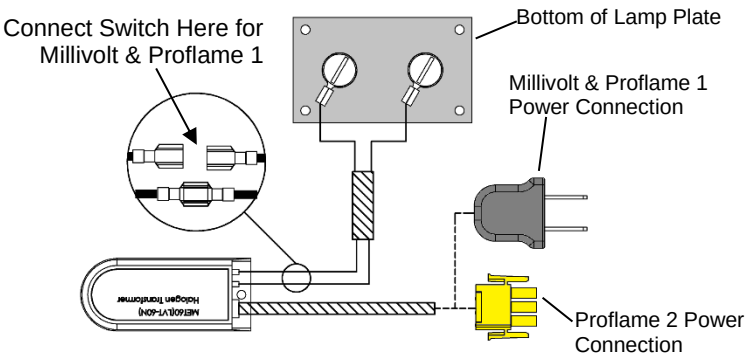

STEP 1: Remove Media Tray and Cover Plate. Place ULK Transformer in position.

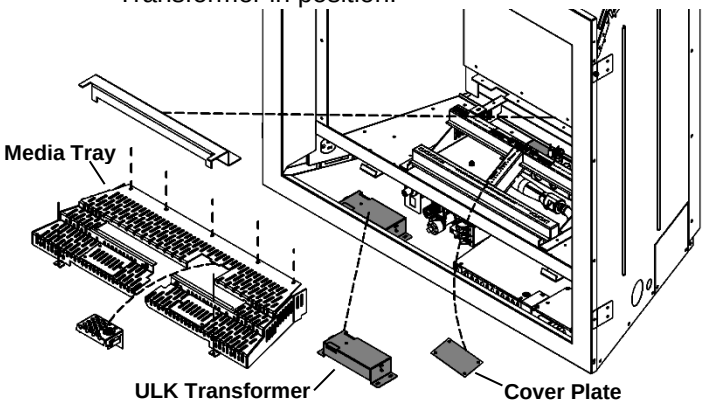

STEP 2: Remove old sealant around exposed opening. **Apply New Sealant (Mill-Pac).** Insert wires on Lamp Plate through opening. Secure Lamp Plate with screws.

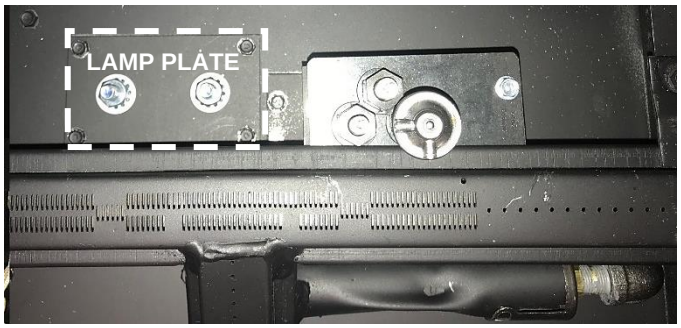

STEP 3: Wire Connections- Refer to schematic at top right of page.

Connect wires from Bottom of Lamp Plate to Red wires on ULK Transformer.

Proflame 2- Plug Yellow connector into White lead from Proflame 2 Module.

See next page for Lamp installation in firebox.

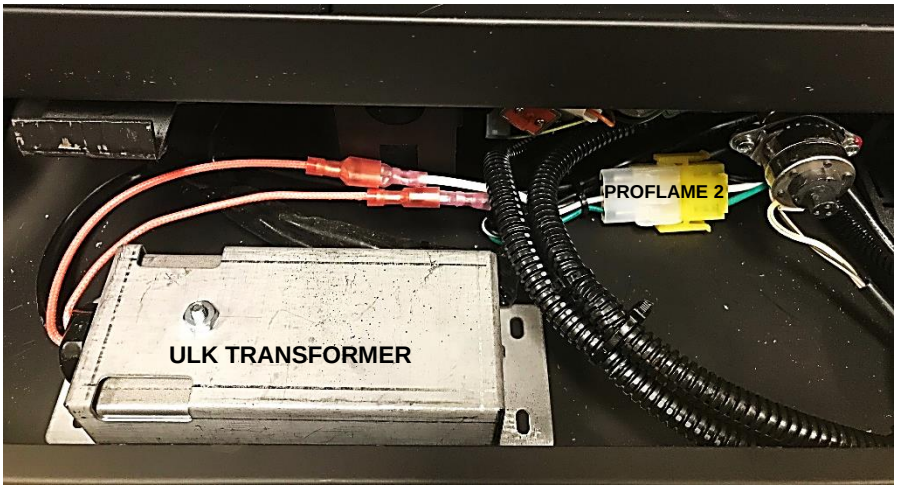

STEP 4:

Install Lamp Assemblies in Firebox Top as shown.

NOTE: Install One Lamp Assembly at a time to avoid confusion when connecting wires to Lamp Plate in Step 5.

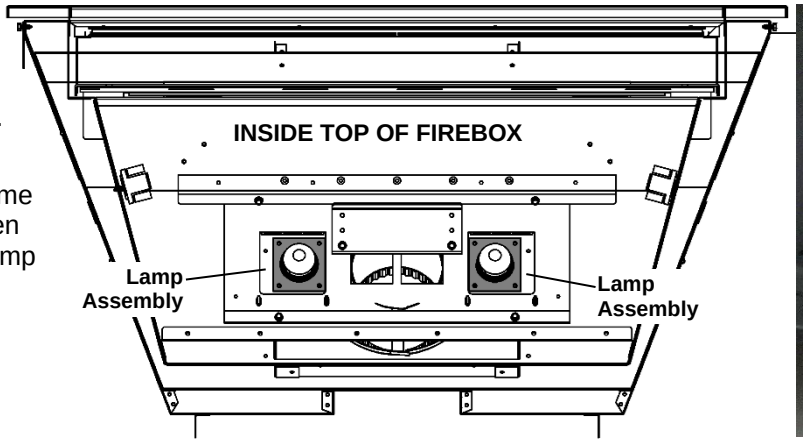



STEP 5: Take wires from rear bottom of firebox and **CONNECT ONE TO EACH STUD ON LAMP PLATE**. Repeat Steps 4 and 5 for the second Lamp Assembly.

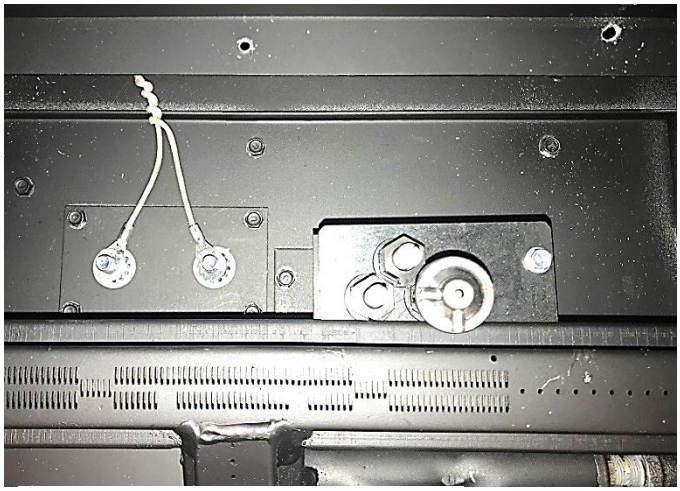

ONE LAMP ASSEMBLY CONNECTED

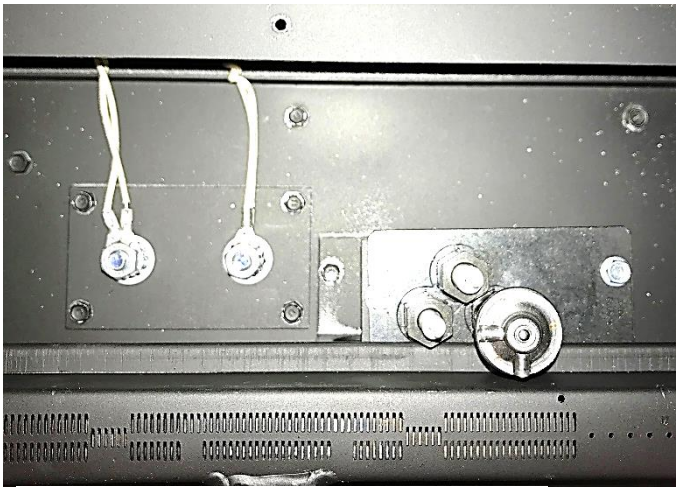

BOTH LAMP ASSEMBLIES ARE CONNECTED

ZCV34PL Porcelain Liner Installation Option

⚠ **WARNING:** Failure to position the parts in accordance with these diagrams or failure to use only parts specifically approved with this appliance may result in property damage or personal injury.

ZCV34PL Consists of:
[1] – Back Liner
[1] – Left Side Liner
[1] – Right Side Liner

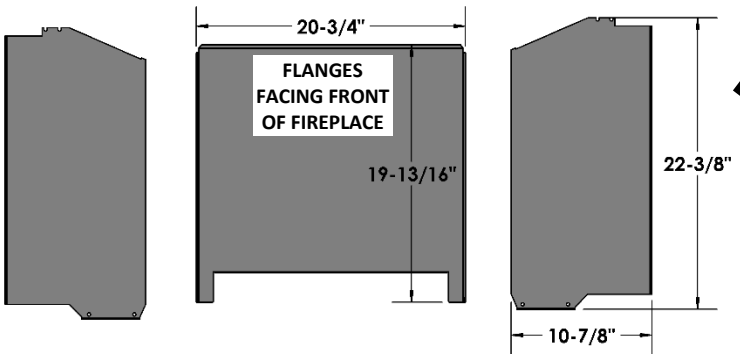

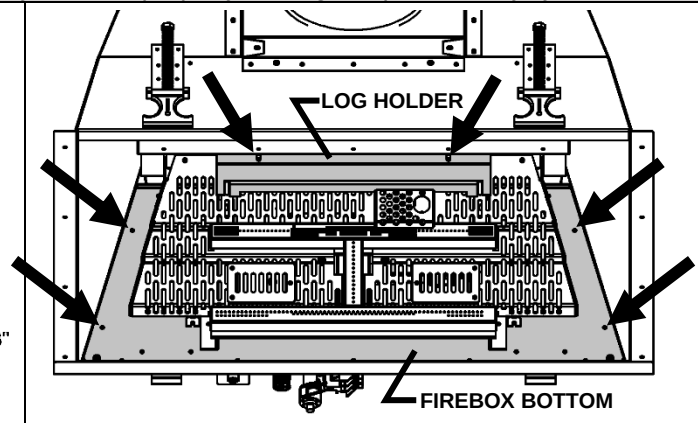

Step One: Remove the [6] DT Screws from inside the firebox as shown. Remove Log Holder if present.

Step Two: Install Back Liner. Reinstall back screws and Log Holder if required.

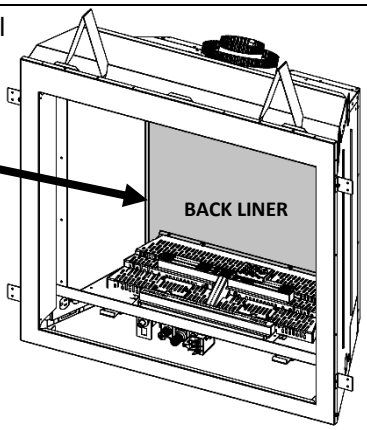

Step Three: Remove Brick Clips, but keep DT Screws in upper front corners of firebox. **Note:** If installaing Rev A. Liners (one slot on top) into a newer fireplace, keep Brick Clips. The Brick Clips will be used to secure the top of the Side Liners.

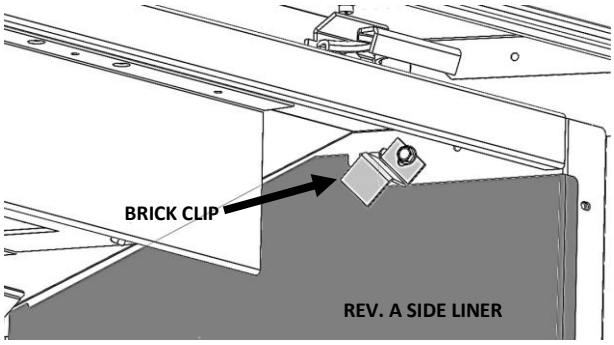

Step Four: Install Side Liners. Place Front Lower Ledge of Side Liner ***Inside of Firebox*** and tilt into place.

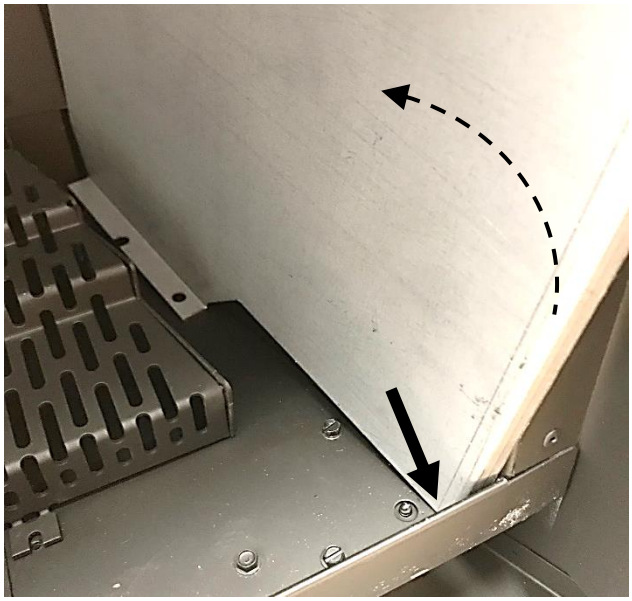

Step Five: Once installed, front of Side Liner will be flush with firebox face. Reinstall DT Screws.



⚠ **Note: Warping and Discoloration of Porcelain or Painted Metal Liners Is Not Covered Under Warranty.**
Both Porcelain and Painted Metal Liners may discolor and warp during normal operation of your appliance. This is normal, and not considered a defect.

ZCV34RL Refractory Liner Installation Option

ZCV34RL Consists of:
[1] – Back Liner
[1] – Left Side Liner
[1] – Right Side Liner

⚠ WARNING: Failure to position the parts in accordance with these diagrams or failure to use only parts specifically approved with this appliance may result in property damage or personal injury.

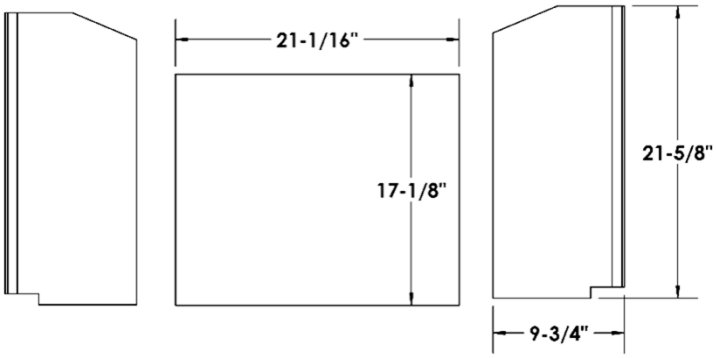

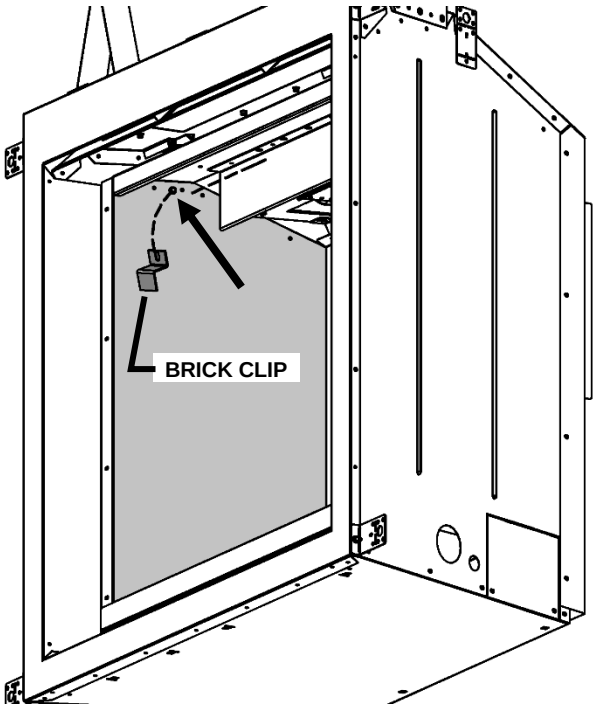

Step One: Remove DT Screws and Brick Clips in upper front corners of firebox.

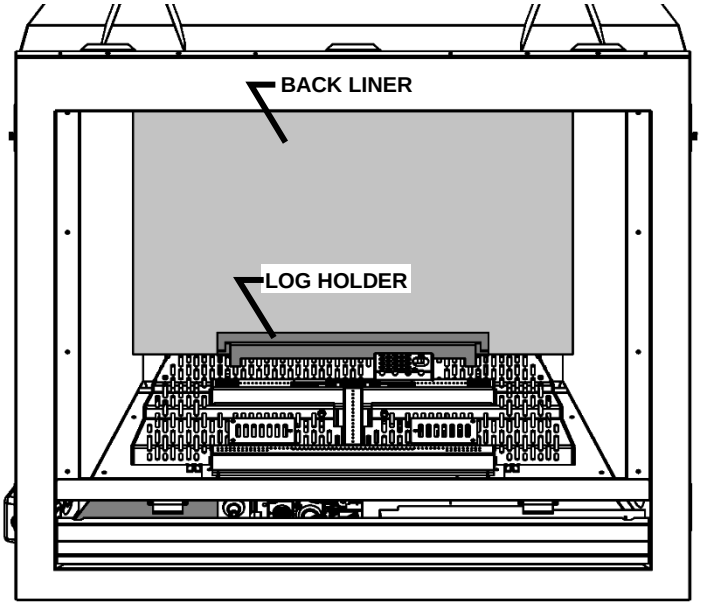

Step Two: Place Back Liner against back wall of firebox behind Log Holder. **Note: Log Holder is used for LOGC44 Logset only.**

Step Three: Tilt and slide left and right side Liners into place. Retain with Brick Clips and DT Screws.

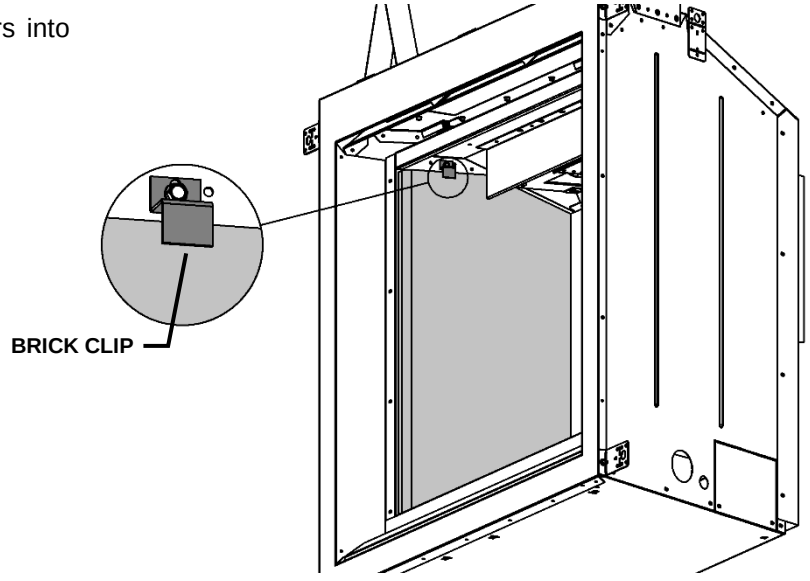

⚠ Note: Discoloration of Liners Is Not Covered Under Warranty.
Liners may discolor during normal operation of your appliance. This is normal, and not considered a defect.

ZCV34 Crushed Glass and Media Options - MQ Dealers Only -

ZCV34 requires [Qty 2] 5LB bags of crushed glass. All glass is sold in 5 LB bags (Maximum 10 LBS of Glass).

GLASS SKU	DESCRIPTION
MQG5W	Decorative Glass 1/2" White
MQG5A	Decorative Ember Glass Cobalt Blue
MQG5B	Decorative Ember Glass - Black
MQG5ZG	Decorative Glass- Zircon Glacier Ice
MQG5C	Decorative Glass- Bronze

The following types of glass are approved:

- Kingsman Decorative Glass
- ½" Ember Glass Material from American Fireglass.

GLASS (MQG5W, MQG5A, MQG5B, MQG5ZG, MQG5C)

If you wish to use this media evenly spread the glass embers onto the false bottom and burner. Ensure the glass embers do not excessively overlap as this will affect the flame pattern. Use care when placing glass embers near the pilot area so as not block or have the glass fall over the crossover holes from the pilot to the burner, as delayed ignition can occur.

Use of any other glass can alter the performance of the unit and is not covered under warranty. Discoloration of glass media may occur if placed on the burner, this is not covered under warranty.

WARNING

- **Pilot Area Must Not Be Covered, as delayed ignition can occur.**
- **Do not change or substitute the glass ember material provided with this fireplace. If replacing, use only replacement glass embers available from your local authorized dealer.**



***Pilot Shield should be visually inspected monthly for signs of deterioration due to flame exposure. Replace if necessary.**

Z5GC KINGSMAN DECORATIVE BRONZE GLASS



NOTE

- **Pilot Area Must Not Be Covered, as delayed ignition can occur.**

REMOVE LOG HOLDER. USED FOR LOGC44 LOGSET ONLY.

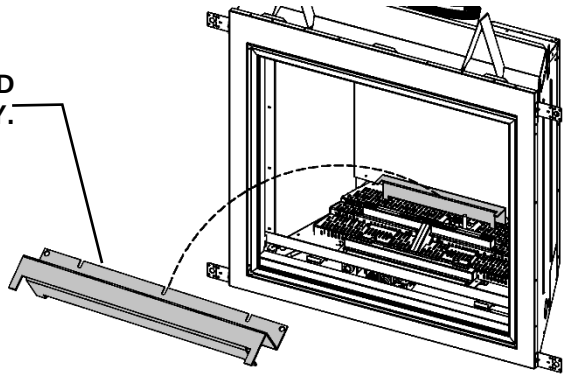

Decorative Glass



ZCV34 - Marquis Collection - Options

MQROCK2, MQROCK3



- **Lava Rock** is supplied with Base Unit. Do not place directly onto Burner.
- Place rocks randomly onto False Bottom and Burner. Do not place directly on burner ports.
- Not all rocks will be used on some installations.
- If sooting occurs change position of or remove affected objects.
- **MQ EMBER** can be placed on Burner.
- **MQ Glass** can be placed on Burner and Glass Tray.

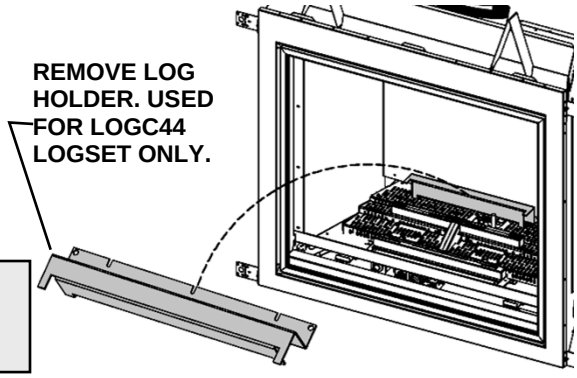

NOTE

Pilot Area Must Not Be Covered, as delayed ignition can occur.

MQ STONE DECORATIVE STONE SET





- MQ Stone can be placed on or around Burner.
- **Lava Rock** is supplied with Base Unit. Do not place directly onto Burner.
- Place Stones onto False Bottom and Burner. Do not place directly on burner ports or Pilot Area.
- Not all stones will be used on some installations.
- If sooting occurs change position of or remove affected objects.
- **MQ EMBER** can be placed on Burner.
- **MQ Glass** can be placed on Burner and Glass Tray.

- **MQEMBER-**
- To be placed directly on Burner and Burner Ports.
- Place these glowing ember chunks randomly. May be used with or without other accessories.

ZCV34 RBCB1 Cannonballs -Installation Instructions Option

Assorted size and colors. Place randomly as desired inside fireplace.

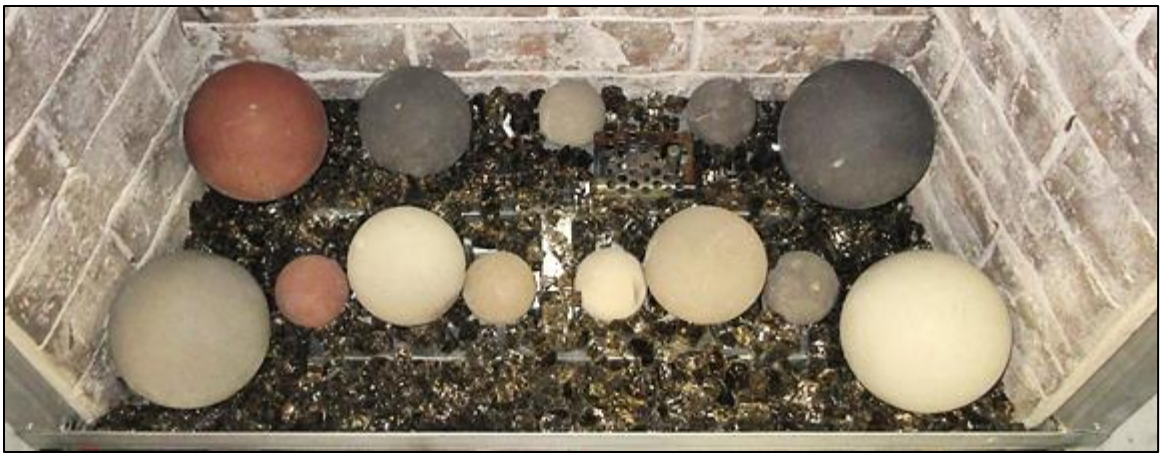

Can be used with MQ Glass, MQ Ember, and / or Lava Rock. Do not place Cannonballs directly on burner ports. If sooting occurs change position of or remove affected objects.

- **MQ Glass can be placed directly on Burner and on Glass Tray (Maximum 10 LBS of Glass).**
- **MQ Ember can be placed directly on Burner Only.**
- **Lava Rock (Supplied with Base Unit) CANNOT be placed on Burner.** Place Lava Rock in channel in front of Glass Tray & on Glass Tray.

⚠ NOTE

- **Pilot Area Must <u>Not</u> Be Covered, as delayed ignition can occur.**
- Do not place Cannonballs directly on burner ports.

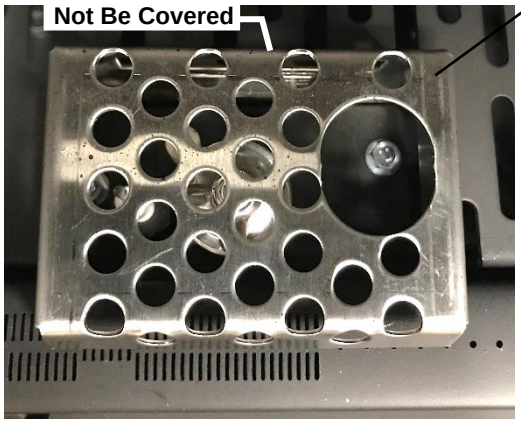

*Pilot Shield should be visually inspected monthly for signs of deterioration due to flame exposure. Replace if necessary.

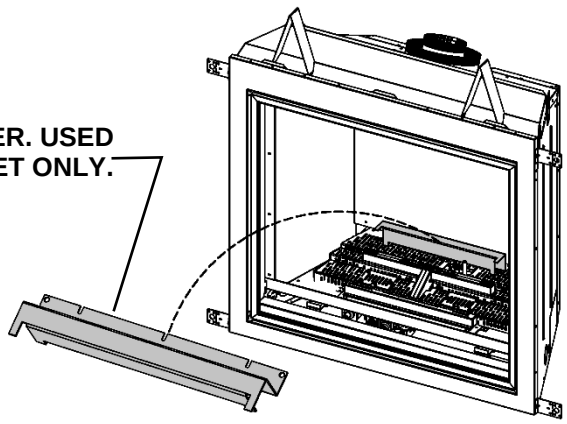

ZCV34	LOGC44 Log Set	Option

⚠**WARNING:** Failure to position the parts in accordance with these diagrams or failure to use only parts specifically approved with this appliance may result in property damage or personal injury.

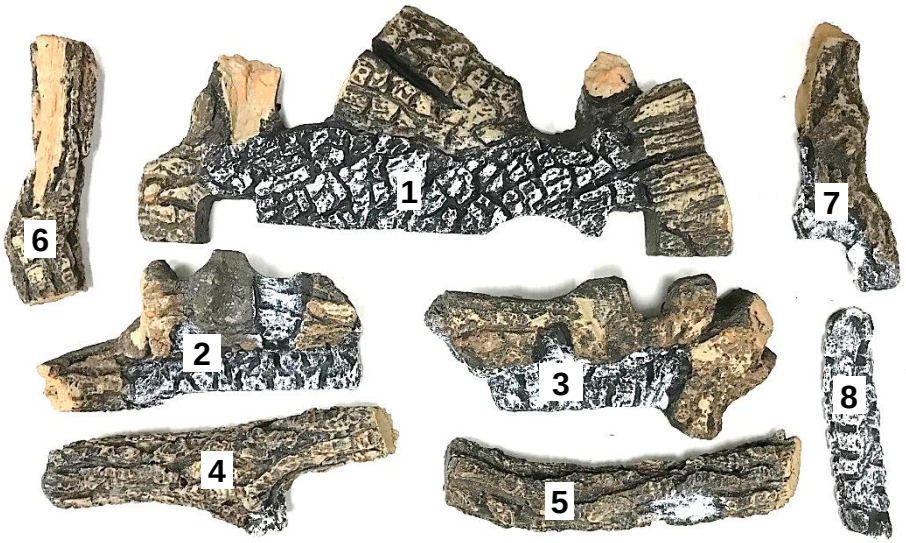





NOTE: Lava Rock & Embers Supplied with fireplace.

STEP 1 – Prepare Fireplace

1. Remove Media Tray, Log Support, and Pilot Shield. Discard Media Tray and Pilot Shield.
   NOTE: Burner shown removed for clarity only.

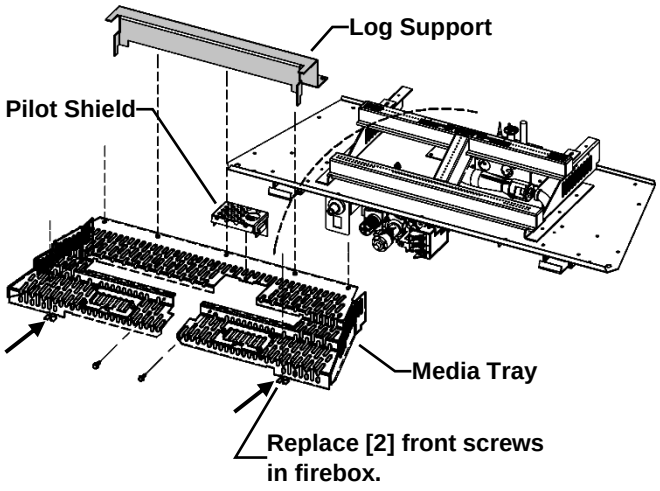

2. Replace Log Support. Set Ember Plates (supplied with unit) into place inside burner area with forked tabs bent down 90°.

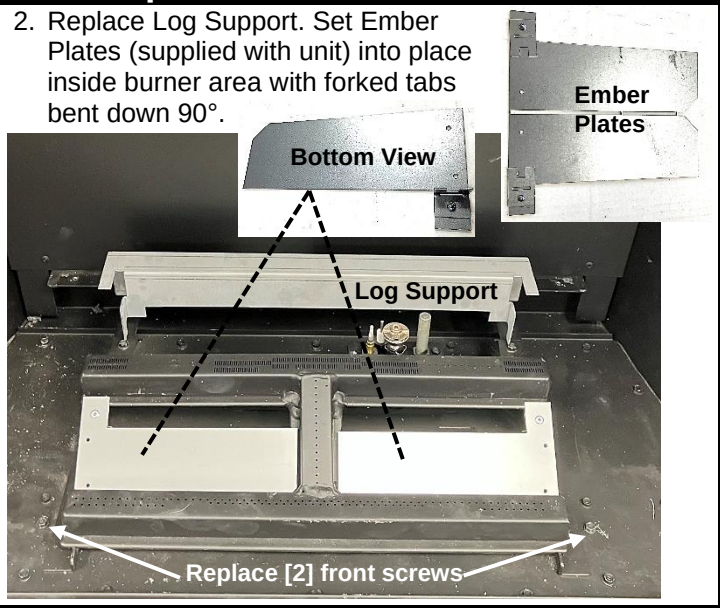

STEP 2 - Log Setup



Step 1: Place **LOG 1** onto Log Holder.

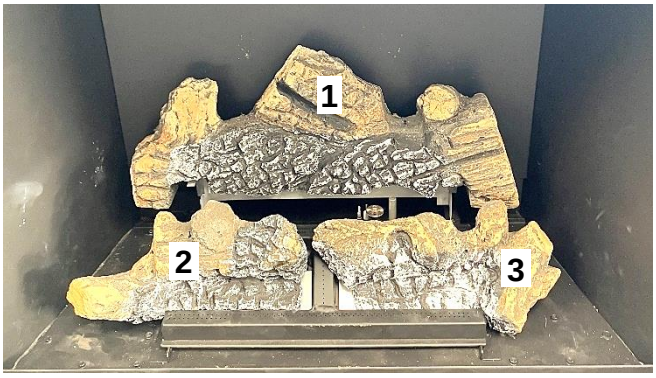

Step 2: Place **LOG 2** and **LOG 3** onto Ember Plates as shown.

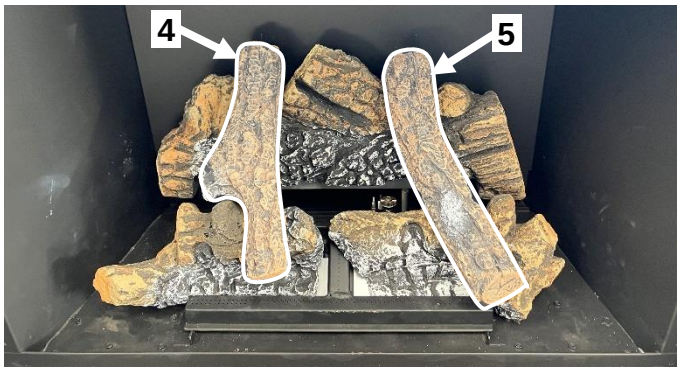

Step 3: Place **LOG 4** and **LOG 5** as shown.

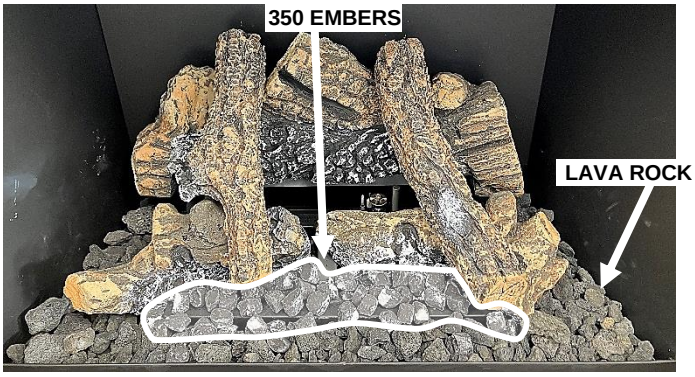

Step 4: Spread **Lava Rock** onto firebox bottom around burner. Place a small amount of **350 Embers** onto the Front Burner. Cover approximately 50% - 60% of Burner Tube. If sooting occurs, remove some 350 Embers.



Step 5: Place **LOG 6** on top of LOG 5 as shown above.



Step 6: Place **LOG 7** on top of LOG 2 along the left side of the firebox as shown above.



Step 7: Place **LOG 8** on top of LOG 2 and under LOG 7 as shown.

⚠**WARNING:** Failure to position the parts in accordance with these diagrams or failure to use only parts specifically approved with this appliance may result in property damage or personal injury.

NOTE: Lava Rock and 350 Embers supplied with fireplace.

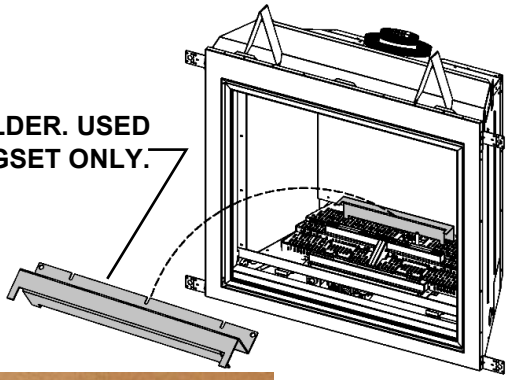

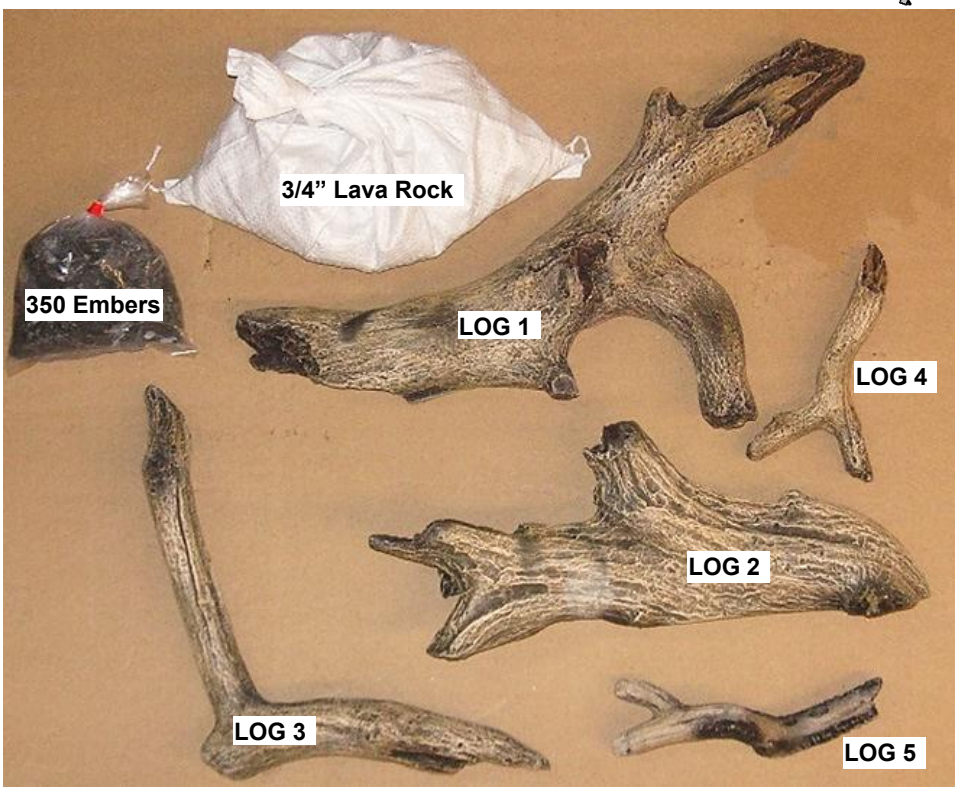

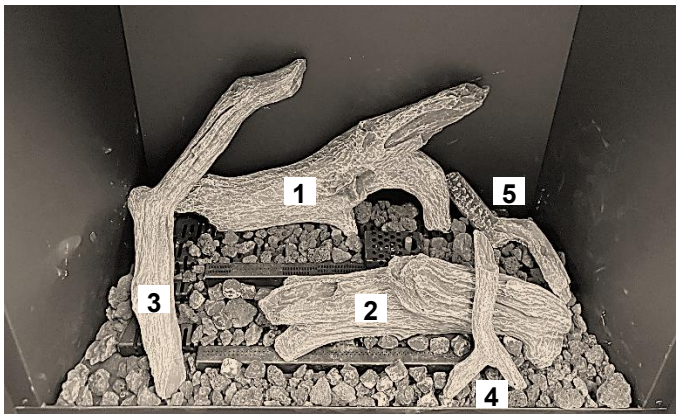



ZCV34 MQRBD3 -5 Piece Driftwood Log Set- MQ Option

⚠ NOTE

- **For best flame pattern it is essential to spread supplied Crushed Glass or MQEMBER directly onto burner tube.**
- **If sooting occurs, one or more logs may be removed.**

REMOVE LOG HOLDER. USED FOR LOGC44 LOGSET ONLY.

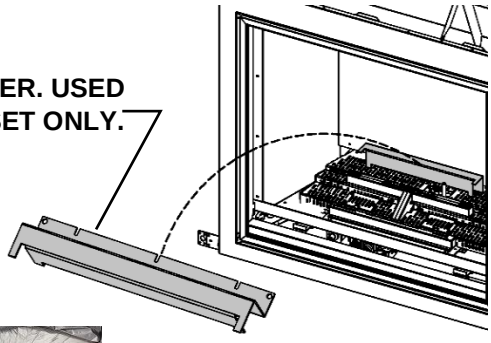



Can be used with MQ Glass, MQ Rock, MQ Stone or MQ Ember. Follow instructions for these accessories.

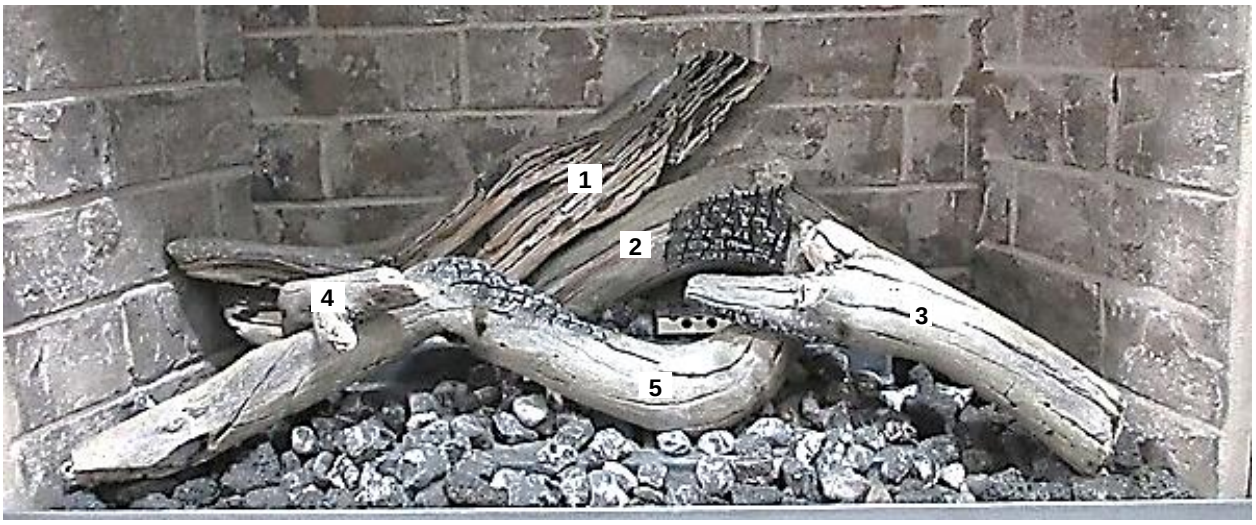

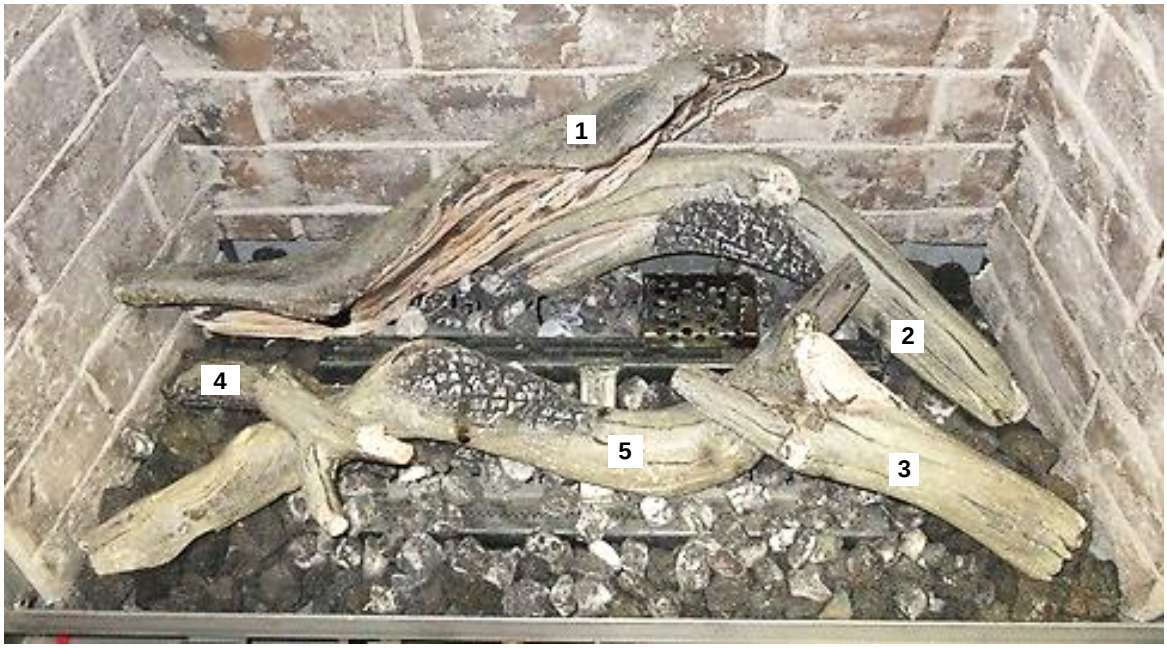

ZCV34 MQRBRW Birchwood Log Set MQ Option



REMOVE LOG HOLDER. USED FOR LOGC44 LOGSET ONLY.

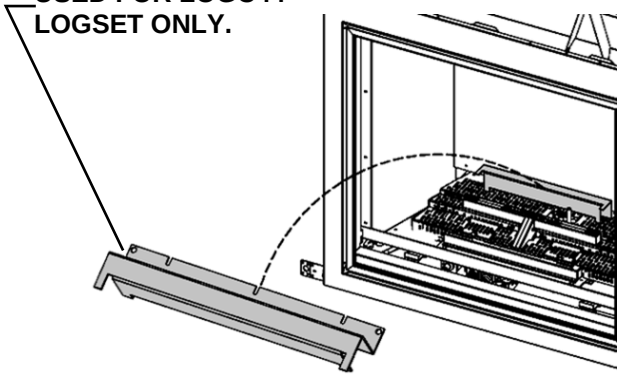



⚠ NOTE

- **Pilot area must not be covered, as delayed ignition could occur**
- **For best flame pattern it is essential to spread supplied Crushed Glass or MQEMBER directly onto burner tube.**
- **If sooting occurs, one or more logs may be moved.**



MQLOGF34BW Birchwood Log Set — MQ Option

⚠ **NOTE:** **For best flame pattern it is essential to spread supplied Crushed Glass or MQEMBER directly onto burner tube. If sooting occurs, one or more logs may be removed.**

⚠ **WARNING:** **Failure to position the parts in accordance with these diagrams or failure to use only parts specifically approved with this appliance may result in property damage or personal injury.**

Refer to MQLOGF34BW & MQLOGF34OAK Setup Instructions.



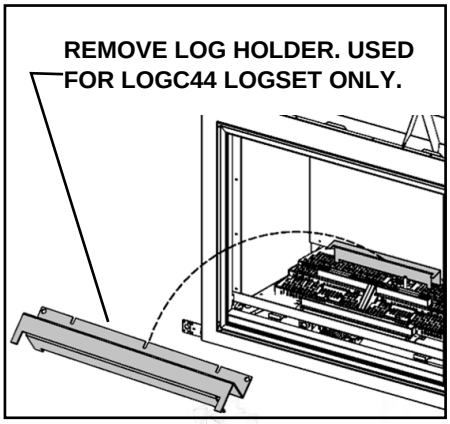

***NOTE: THESE ITEMS ARE SUPPLIED WITH THE FIREPLACE:**

***Insulation Wool**



***Embers**

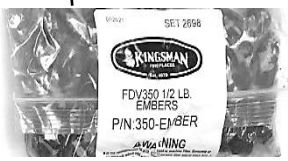

***Lava Rock**

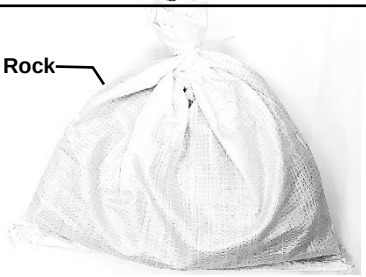



MQLOGF34OAK Oak Log Set — MQ Option

⚠ **NOTE:** **For best flame pattern it is essential to spread supplied Crushed Glass or MQEMBER directly onto burner tube. If sooting occurs, one or more logs may be removed.**

⚠ **WARNING:** **Failure to position the parts in accordance with these diagrams or failure to use only parts specifically approved with this appliance may result in property damage or personal injury.**

Refer to MQLOGF34BW & MQLOGF34OAK Setup Instructions.

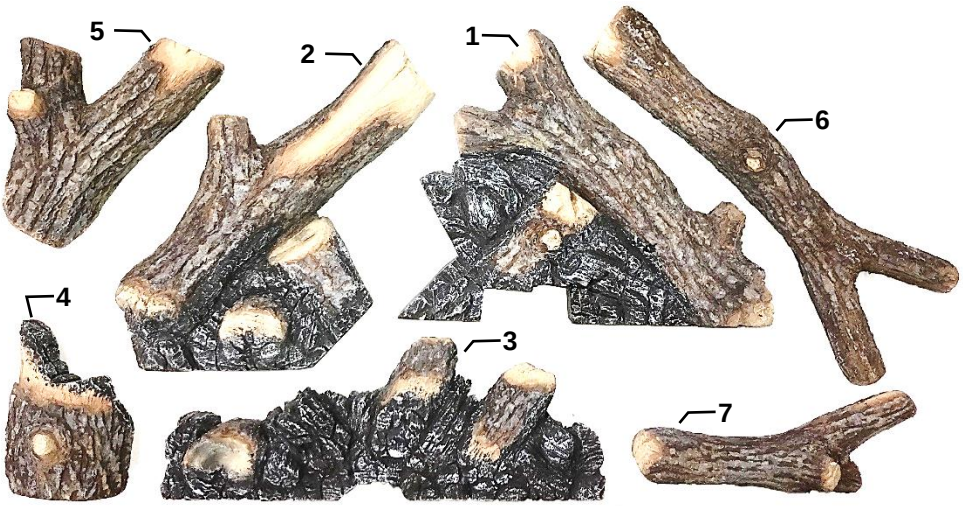

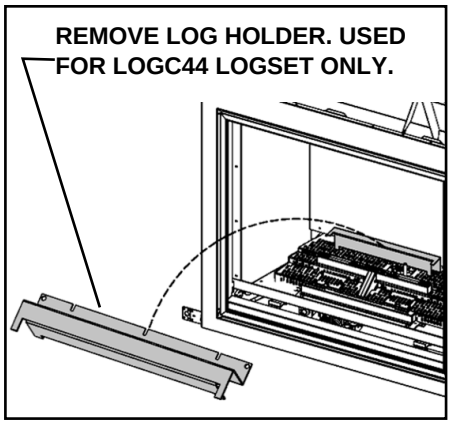

***NOTE: THESE ITEMS ARE SUPPLIED WITH THE FIREPLACE:**

***Insulation Wool**



***Embers**

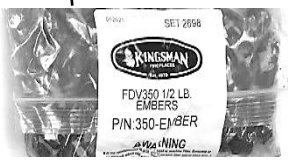

***Lava Rock**





ZCV34 - MQLOGF34BW & MQLOGF34OAK Setup Instructions





Pull up Log Tabs for Log 3



Set Log 3 onto center of Burner and pull forward up to Log Tabs. Place Log 4 at front left side of Firebox.



Place Log 5, Log 6, and Log 7 as shown.



Place Lava Rock on Firebox Bottom and on Media Tray.

Place Embers and Insulation Wool on Burner

ZCV34 Gas Line Installation

This gas appliance should be installed by a qualified installer in accordance with local building codes and with current CAN/CGA - B149.1 or .2 installation codes for Gas Burning appliances and equipment in Canada and the National Fuel Gas Code ANSI Z223 in the U.S.A.

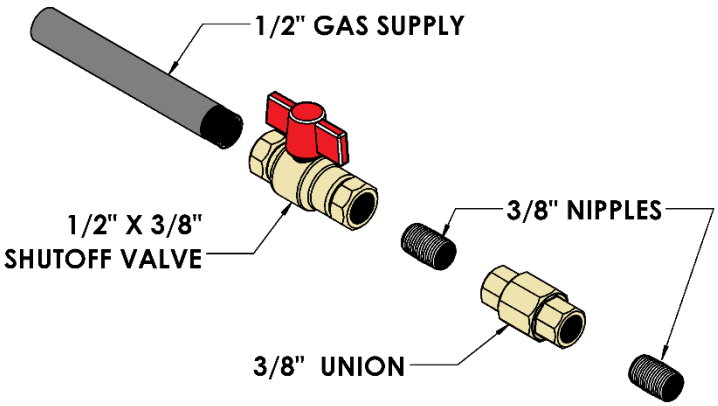

1. The gas pipeline can be brought in through either the right or the left side of the appliance. A knockout is provided at either location to allow for the gas pipe installation and testing of any gas connection.

2. The gas control inlet is 3/8" NPT. Typical installation layout for rigid pipe is shown at right.

3. When using copper or flex connector, use only approved fittings. Always provide a union so that gas line can be easily disconnected for burner or fan servicing. See gas specification for pressure details and ratings.

4. When a vertical section of gas pipe is required for the installation, a condensation trap is needed. See CAN/CGA-B149.1 or .2 for code details.

5. For natural gas, a minimum of 3/8" iron pipe with gas minimum pressure of 4.5" w.c. must be used for supply from the gas meter. Consult with the local gas utility if any questions arise concerning pipe sizes.

6. A 1/8" NPT plugged tappings are accessible for test gauge connection both on the inlet and outlet of the gas valve.

7. Turn the gas supply ON and check for leaks. DO NOT USE OPEN FLAME FOR THIS PURPOSE. Use an approved leak testing solution.

8. The appliance and its individual shutoff valve must be disconnected from the gas supply piping system during any pressure testing of that system at test pressures in excess of 1/2 PSIG (3.5 KPa).

9. The appliance must be isolated from the gas supply piping system by closing its individual shutoff valve during any pressure testing of the gas sup- ply piping system at test pressures equal to or less than 1/2 PSIG (3.5 KPa).

NOTE: The gas line connection may be made of 1/2" rigid pipe or an **Approved Kingsman Flex Connector, such as FP15GC**. Since some municipalities have additional local codes, it is always best to consult your local authorities and the current CAN/CGA - B149.1 or .2 installation code in Canada or the National Fuel Gas code ANSI Z223.1 in the U.S.A

For the state of Massachusetts a T-handle gas shut-off valve must be used on a gas appliance. This T-handle gas shut-off valve must be listed and approved by the state of Massachusetts. This is in reference to the state of Massachusetts state code CMR238.

Important: Always check for gas leaks with a soap and water solution. Do not use open flame for leak testing.

Shutoff valves installed in tubing systems shall be rigidly and securely supported independently of the tubing.

Gas Specifications

MODELS	ZCV34N	ZCV34NH	ZCV34LP	ZCV34LPH	ZCV34NE ZCV34NE2	ZCV34NHE ZCV34NHE2	ZCV34LPE ZCV34LPE2	ZCV34LPHE ZCV34LPHE2
Fuel	Natural	Natural	Propane	Propane	Natural	Natural	Propane	Propane
Gas Control	Millivolt	Millivolt	Millivolt	Millivolt	IPI	IPI	IPI	IPI
INPUT								
Maximum	19,000 BTU	19,000 BTU	18,000 BTU	18,000 BTU	19,000 BTU	19,000 BTU	18,000 BTU	18,000 BTU
Low	13,500 BTU	13,500 BTU	14,000 BTU	14,000 BTU	13,500 BTU	13,500 BTU	14,000 BTU	14,000 BTU
Orifice Size (0-4500ft)	# 44	# 44	# 54	# 54	# 44	# 44	# 54	# 54
Air Shutter	3/32"	3/32"	3/8"	3/8"	3/32"	3/32"	3/8"	3/8"

Gas Inlet Size S.I.T. 820 Nova, 3/8" NPT			
Gas Supply Pressure	Minimum	Normal	Maximum
Natural Gas	5.5"	7"	9"
Propane	11"	11"	12"

Manifold Pressure	Natural Gas	Propane
Manifold Pressure High	3.5 IN. W.C./.87 KPa	10 IN. W.C./2.61 KPa
Manifold Pressure Low	1.6 IN. W.C./.40 KPa	6.3 IN. W.C./1.57 KPa

Annual Inspection List for Determining Safe Operation of a Direct Vent Gas Fireplace

Refer to this checklist for proper maintenance, safe use, and operation.

See each section for more specific information.

1. Inspect and operate all pressure relief mechanisms (i.e., relief dampers, spring loaded door latches) installed on your appliance to verify relief mechanisms are free from obstruction to operate.

Relief Dampers inside Firebox should open and close freely.

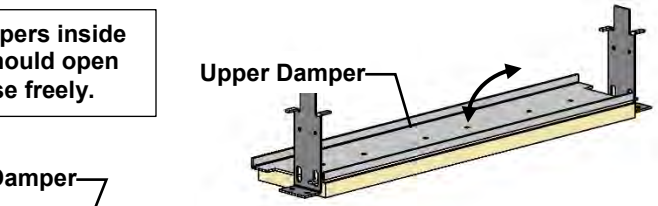

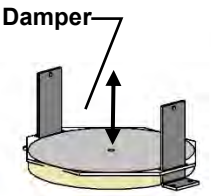

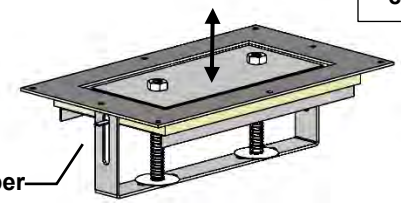

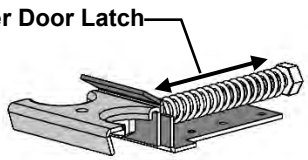

Spring loaded Door Latches should extend and return to the closed position.

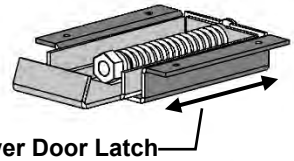

2. Clean glass window with a suitable fireplace glass cleaner. Abrasive cleaners must not be used. Be careful not to scratch the glass when cleaning.

3. Inspect the operation of the Pilot. Ensure that it is working properly.

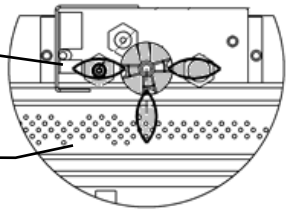



4. Inspect and ensure the lighting of the main burner occurs within 4 seconds of the main gas valve opening. Visual inspection should match that outlined in the appliance instruction manual (refer to ***Monthly Flame Inspection***). Inspect primary air openings for blockage.

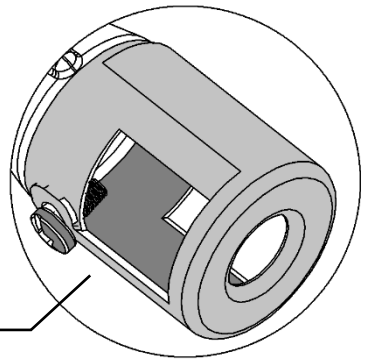

5. Inspect condition of vent and vent terminal for sooting or obstruction and correct if present.

6. Vacuum and clean any debris in the firebox that is not supposed to be there.

7. Test and measure the flame failure response time of the flame safety system. It must de-energize the safety shutoff in no more than 30 seconds.
Procedure for Millivolt Units: Turn on fireplace for 5 minutes. Shut off fireplace while listening to valve. A "click" should be heard within 30 seconds. This indicates the safety shutoff is working properly.
Procedure for IPI Units: Turn on fireplace and allow main burner to come on. Then disconnect Flame Sense wire from IPI Module (X3 Connection). The fireplace should shut down immediately.

8. Check all accessible gas-carrying tubes, connections, pipes and other components for leaks.

Troubleshooting the Gas Control System

⚠ WARNING

BEFORE DOING ANY GAS CONTROL SERVICE WORK, REMOVE THE GLASS FRONT.
NOTE: Before troubleshooting the gas control system, be sure external gas shut off is in the "On" position.

Problem	Possible Causes	Corrective Action
Spark igniter will not light.	Defective or misaligned electrode at pilot.	Check for spark at electrode and pilot: if no spark and electrode wire is properly connected, replace igniter.
	Defective igniter (push-button).	Using a match, light pilot. If pilot lights, turn off pilot and push the red button again. If pilot will not light - check gap at electrode and pilot should be 1/8" to 1/4" to have a strong spark.
Pilot will not stay lit after carefully following lighting instructions.	Defective thermocouple (flame switch where applicable).	Check pilot flame. Must impinge on generator and thermocouple. Clean and/or adjust pilot for maximum flame impingement on generator and thermocouple. Replace thermocouple if pilot will not hold. (Hand tight 1/8 turn on replacement)
	Defective valve magnet.	Replace valve, if pilot won't hold after the thermocouple is replaced.
Pilot burning, no gas to burner, valve knob “ON”, and wall switch “ON”.	Wall switch or wires defective.	Check wall switch and wires for proper connections. Jumper wire across terminals at wall switch. If burner comes on, replace defective wall switch. If okay, jumper wires, across wall switch wires at valve. If burner comes on, wires are faulty or connections are bad.
	Generator may not be generating sufficient voltage.	Check generator with millivolt meter. Take reading at generator terminals of gas valve. Should read 325 millivolts minimum while holding valve knob depressed in pilot position and wall switch "off" Replace faulty generator if reading is below specified minimum.
	Plugged burner orifice.	Check burner orifice for stoppage and remove.
	Defective automatic valve operator.	Remove wall switch wires from gas valve. Install jumper wires from top bottom terminals of gas valve. Turn valve on "ON". If main burner does not light, replace valve.
Frequent pilot outage problem.	Pilot flame may be too low or blowing (high) causing the pilot safety to drop out.	Clean and/or adjust pilot flame for maximum flame impingement on generator and thermocouple. *See NOTE below – Seven Day Timer
Flame lifts off burner and goes out in less than 30 seconds.	Inner 4” liner has come off flue or termination, flame is starving for oxygen.	Attach 4" liner to flue or termination using screws, silicone and clamps as stated in manual.
Flame lifts off burner on one side while the rest of the flame remains lit.	Improper installation of firebrick. Firebrick is likely leaning.	Be sure to position firebrick against firebox walls and be sure to use brick clips attached to the inner side of firebox.

***NOTE:** The pilot system for this appliance may be equipped with a **Seven Day Timer**, in which case the pilot flame will be extinguished if the main burner has not been turned ON for seven days.

This Seven Day Cycle is reset every time the main burner is cycled ON / OFF and the pilot remains lit.

If more than seven days has passed since the main burner has been cycled ON / OFF and the pilot is also out, follow the procedures described in this manual to light the pilot.

NOTE: MILLIVOLT UNITS WITH 7 DAY TIMER – When lighting pilot, the Pilot Knob must be pressed until a **BEEP** is heard. This procedure may take up to **TWO MINUTES.**

ZCV34 Burner System Maintenance

It is recommended to annually inspect and clean the Burner System to prevent malfunction and / or sooting. This operation should be performed by your dealer or a qualified technician.

⚠ -CAUTION-

Before servicing the burner system ensure that the gas supply is turned OFF and disconnect all electrical connections to the appliance. Allow the appliance to cool to room temperature. Note that the pilot assembly may be hot in an intermittent or standing-pilot system—even if the main burner was never on. Exercise caution when working within the area.

-ALL WORK SHOULD BE PERFORMED BY A QUALIFIED AND CERTIFIED TECHNICIAN-

Monthly Flame Inspection



It is recommended to turn on the unit at least once a month and inspect the flame pattern to ensure there are no problems with the burner tube (Flame should appear similar to the above picture).

The pilot flame should also be inspected monthly to ensure proper operation.



Pilot Must Maintain This Relationship With Burner.

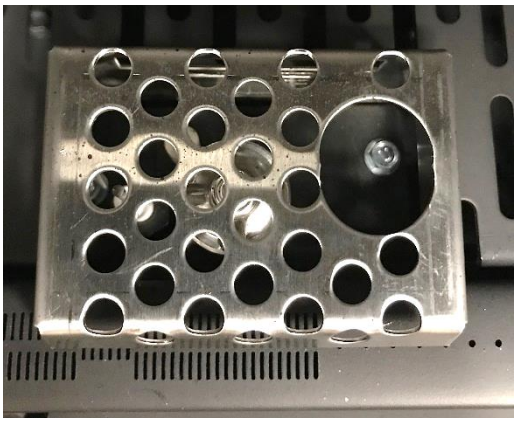

Pilot Area Must Not Be Covered.

*Pilot Shield should be visually inspected monthly for signs of deterioration due to flame exposure. Replace if necessary.

ZCV34 -Gas Conversion Part A-

ZCV34N, ZCV34NE, ZCV34NE2, ZCV34LP, ZCV34LPE, ZCV34LPE2, ZCV34NH, ZCV34NHE, ZCV34NHE2, ZCV34LPH, ZCV34LPHE, ZCV34LPHE2

Kit Number	Description	Pilot Orifice	Burner Orifice Brass (1000-255)	Brass Nipple	Air Shutter	Hi/Lo Regulator
34ZCV-CKLP	Propane Conversion -Millivolt-	1001-P167SI **#30** (977.167)	#54	1000-253 Close	3/8”	1001-P202SI (0.907.202)
34ZCV-CKNG	NG Conversion -Millivolt-	1001-P165SI **#51** (977.165)	#44	1000-253 Close	3/32”	1001-P201SI (0.907.201)
34ZCV-CKLPI	Propane Conversion -IPI-	1001-P168SI **#35** (977.168)	#54	1000-253 Close	3/8”	1002-P014SI (0.907.014)
34ZCV-CKNGI	NG Conversion -IPI-	1001-P166SI **#62** (977.166)	#44	1000-253 Close	3/32”	1002-P016SI (0.907.016)
34ZCV-CKLP2	Propane Conversion -IPI-	1001-P168SI **#35** (977.168)	#54	1000-253 Close	3/8”	1002-P012SI (907.012)
34ZCV-CKNG2	NG Conversion -IPI-	1001-P166SI **#62** (977.166)	#44	1000-253 Close	3/32”	1002-P013SI (907.013)
IMPORTANT: Always check for gas leaks with a soap and water solution. DO NOT USE OPEN FLAME FOR LEAK TESTING.						

Parts List (SIT):
- HI/LO Pressure Regulator Assembly
- Burner Orifice
- Brass Nipple
- Instructions
- Conversion Kit Label
- Pilot Orifice

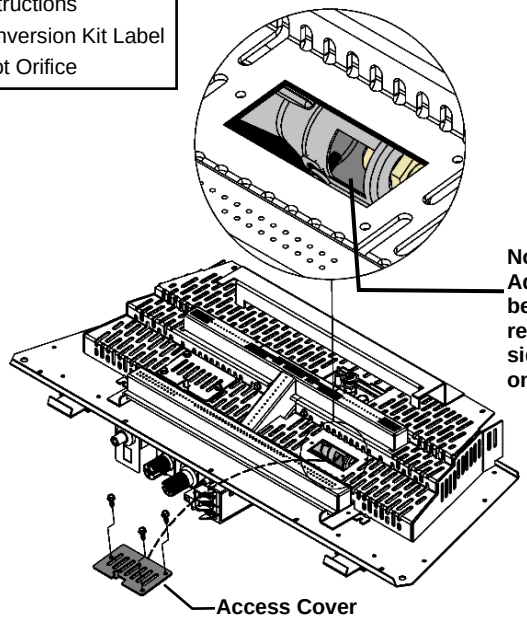

Note: Air Shutter Adjustment can be made by removing right side access cover on Media Tray.

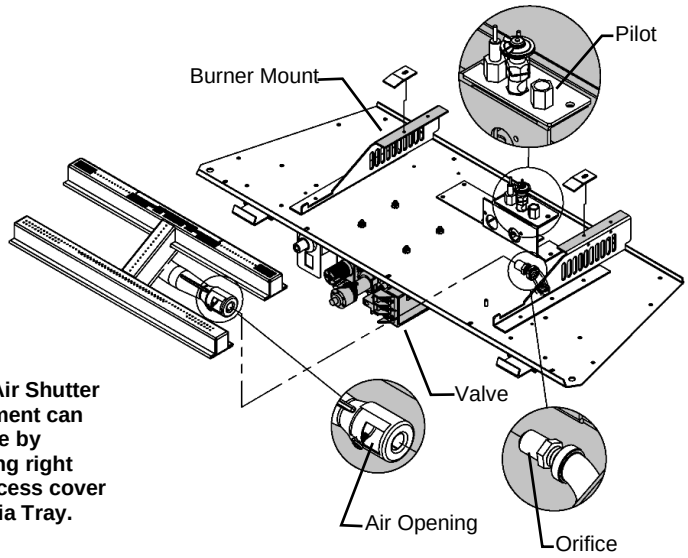

⚠ Caution:

The gas supply shall be shut off prior to disconnecting the electrical power, before proceeding with the conversion.

1. The Burner Tube must be removed from the Burner Pan Assembly (See **Burner Tube Removal**). Adjust the Air Shutter to the correct Primary Air setting as specified in the manual or on the label plate. To adjust the Primary Air setting, loosen screw on the side of the Air Shutter and rotate to the correct opening using a drill bit or tape measure. Retighten screw.
2. Remove the Main Orifice using a ½” wrench and replace with the new Conversion Orifice which came with the Conversion Kit.
3. Replace the Burner Tube. Install the new Pilot Orifice (See **Pilot Conversion**) and Hi/Lo valve regulator by following instructions supplied with the Conversion Kit.

- Refer to ***Gas Specifications Chart*** for inlet pressures and input ratings.
- Clock meter to verify input rate.
- Place conversion label as close to converted gas control as possible.
- Refer to ***lighting instructions*** to verify the normal operating sequence of the ignition system.
- Refer to ***Burner System Maintenance*** for proper relationship of the pilot flame to the main burner and for main burner flame appearance.

-⚠ Warning-

This conversion kit shall be installed by a qualified service agency in accordance with the manufacturer's instructions and all applicable codes and requirements of the authority having jurisdiction. If the information in these instructions is not followed exactly, a fire, explosion or production of carbon monoxide may result causing property damage, personal injury or loss of life. The qualified service agency is responsible for the proper installation of this kit. The installation is not proper and complete until the operation of the converted appliance is checked as specified in the manufacturer's instructions supplied with the kit.

Gas Conversion for Top Convertible Pilot – Part B (series 0190XYZ)

Instructions for converting SIT 190 series pilot burner injector from NG to PROPANE and from PROPANE to NG only. This information should be considered as supplemental to the Appliance Manufacturer's Instructions.

WARNING! The installation of this conversion kit must only be undertaken by a qualified and certified gas appliance installer.

1. Shut-off the gas supply to the appliance.
2. Allow the pilot burner to cool to room temperature.

   WARNING: Touching a hot pilot burner can result in injury.

3. The pilot hood is held in place by spring. First remove the spring, then remove the hood by pulling it up from the pilot bracket (fig. 1).
4. Insert a 5/32" or 4 mm Allen wrench into the hexagonal key-way of the injector (fig. 2), and rotate it counter-clockwise until it is free of the injector journal.
5. Verify that the new injector is proper for the application. The injector size is stamped on the side of the injector near the top. Propane injectors have a groove machined around their circumference near the top, while NG injectors do not have a groove (fig. 4). Refer to the Appliance Manufacturer's instruction sheet for the proper injector size.
6. Insert the Allen wrench into the end of the injector. Then, insert the injector into injector journal, and rotate the injector clockwise until a torque of 9 lbf in (1.0 Nm) is achieved.
7. First replace the pilot hood by aligning the tab on the base of the hood with the slot in the side of the pilot journal, and push the hood down, onto the pilot bracket (fig. 3). The hood must sit squarely on the bracket for proper operation. Then replace the spring by pushing it on his seat (fig.3). Check to insure that the hood is properly seated onto the pilot bracket and that the spring is properly inserted onto his seat.
8. Restore the gas supply to the appliance, and ignite the pilot burner. Verify proper ignition and operation.

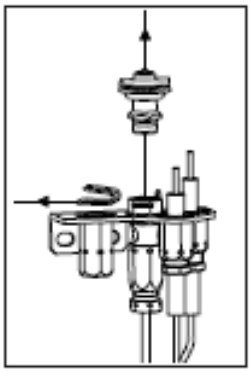

fig. 1

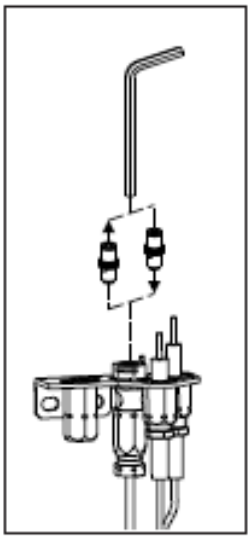

fig. 2

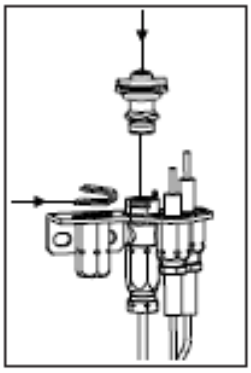

fig. 3

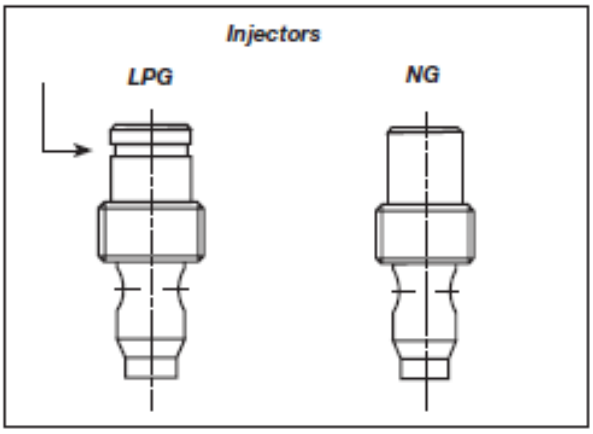

fig. 4

WARNING!

This conversion kit must ONLY be applied as part of a conversion kit supplied by the APPLIANCE MANUFACTURER for the specific appliance, and type of gas, being converted.

installationinstructions

7.252.136

820 NOVA mV

Modulating Conversion Kit

WARNING!
The installation of this conversion kit must only be undertaken by a qualified and certified gas appliance installer.

MODULATING PRESSURE REGULATOR CONVERSION KIT INSTALLATION OR REPLACEMENT INSTRUCTIONS.

1 *Turn control knob to the OFF position, and shut off the gas supply to the valve.*

2 *Using a Torx T20, or slotted screwdriver, remove and discard the three pressure regulator mounting screws (A), pressure regulator tower (B), and the spring and diaphragm assembly (C) . (If applicable)*

3 *Insure that the rubber gasket (D) is properly positioned and install the new modulating pressure regulator assembly to the valve using the new screws (E) supplied with the kit. Tighten screws securely. (Reference torque = 25 In.Lb.)*

4 *Install the enclosed identification label (F) to the valve body where it can be easily seen.*

5 *Apply gas to system and re-light appliance according to manufacturers instructions.*

6 *With the main burner "ON", test the new pressure regulator assembly for leaks using a soap solution.*

7 *Relight the main burner in both the HI and LO positions, and verify proper burner ignition and operation.*

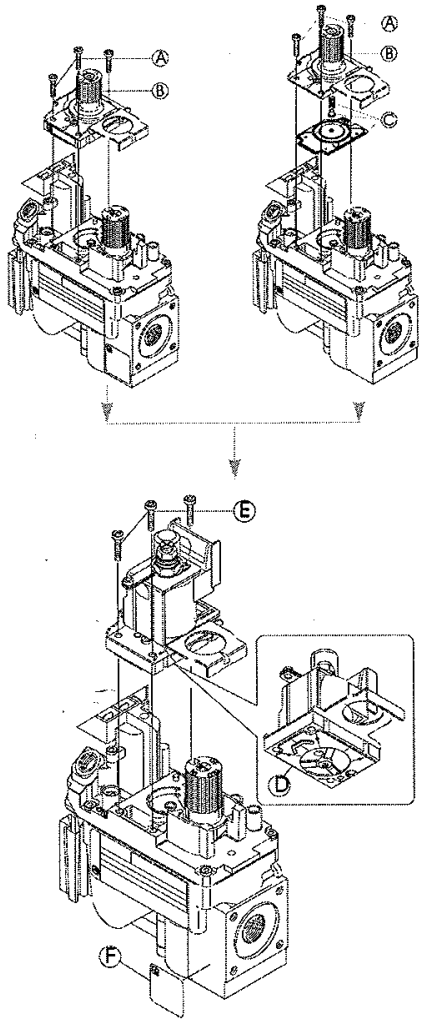

WARNING!
This modulating conversion kit must ONLY be supplied as part of a conversion kit supplied by the APPLIANCE MANUFACTURER for the specific appliance, and type of gas, being converted.

INSTALLER NOTICE. These instructions must be left with appliance.

SIT Group

ZCV34 Burner Removal

To remove Burner, remove Log Holder, Pilot Shield, Media Tray, and Burner Retainers.

Slide Burner slightly to the left to dislodge it from the Orifice and remove it from the fireplace.

⚠ WARNING

Turn off Unit and allow to cool before cleaning. Only a Qualified service technician should service and repair this appliance.

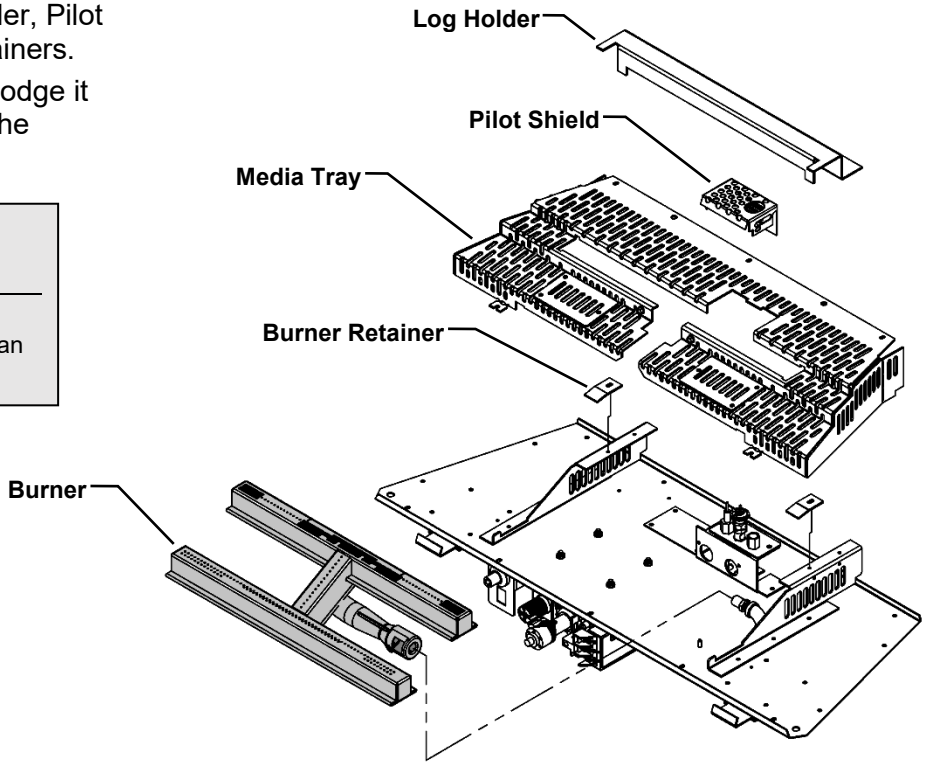

ZCV34 Burner System Removal / Installation

Burner System Removal: Remove Log Holder. Remove Media Tray. Remove DT Screws around perimeter of Burner Pan. Carefully work the burner pan loose & lift the assembly upward to remove it from the firebox cavity. **Burner System Installation** is the reverse of these steps. Ensure that the mounting surface is clean. Use fresh **Black Mill Pac** to reseal the burner pan.



NOTE: Pilot connections through Burner Pan must be sealed with **Red Silicone**.

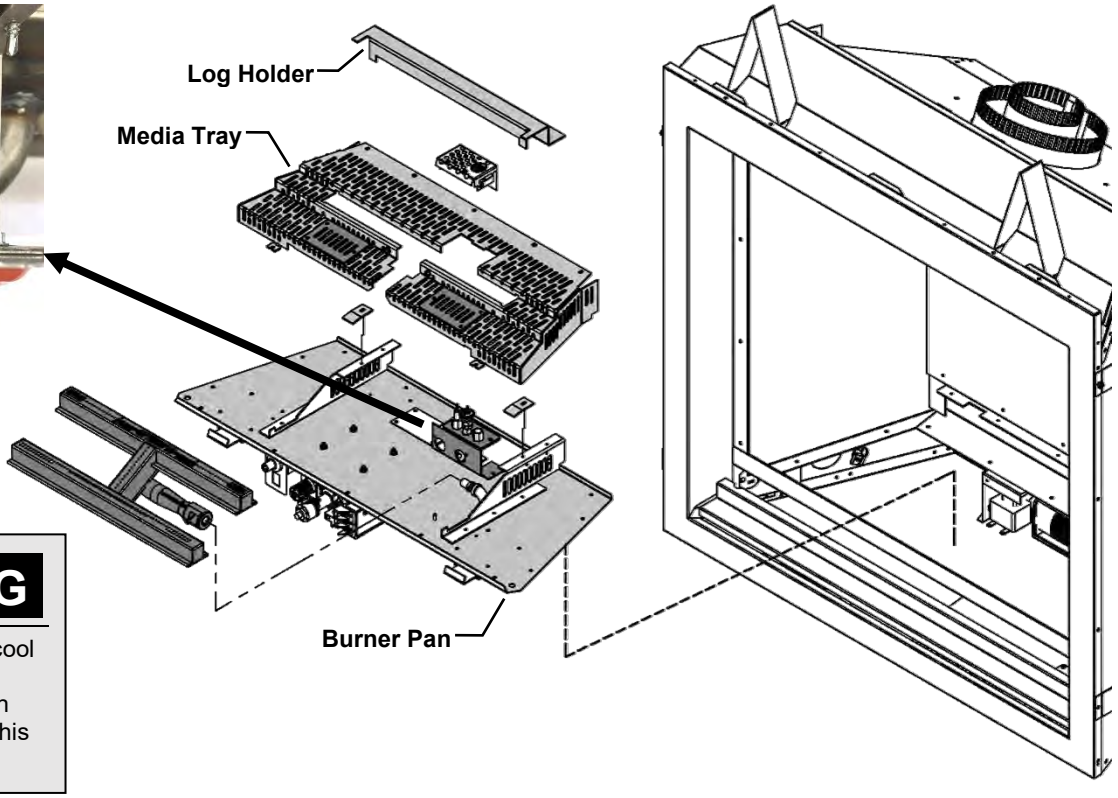

⚠ WARNING

Turn off Unit and allow to cool before cleaning. Only a Qualified service technician should service and repair this appliance.

Millivolt System, Lighting, and Burner Control

FOR YOUR SAFETY READ BEFORE LIGHTING

⚠WARNING: If you do not follow these instructions exactly, a fire or explosion may result causing property damage, personal injury or loss of life.

BEFORE LIGHTING

A This appliance has a pilot which must be lighted by hand. When lighting the pilot, follow these instructions exactly.

B Smell all around the appliance area for gas. Be sure to smell next to the floor because some gas is heavier than air and will settle on the floor.

WHAT TO DO IF YOU SMELL GAS

- Do not try to light an appliance.
- Do not touch any electrical switch; do not use any phone in your building.
- Immediately call your gas supplier from a neighbour's phone. Follow the gas supplier's instructions.
- If you cannot reach your gas supplier, call the fire department.

C Use only your hand to push or turn the gas control knob. Never use tools. If the knob will not push in or turn by hand, don't try to repair it. Call a qualified technician. Force or attempted repair may result in a fire or explosion.

D Do not use the appliance if any part has been under water. Immediately call a qualified service technician to inspect the appliance and to replace any part of the control system which has been under water.

LIGHTING INSTRUCTIONS

1. Stop! Read the safety information above this label.
2. Set the thermostat to lowest setting.
3. Turn off all electrical power to the appliance.
4. Locate valve under the burner assembly.
5. If the control knob is not already in the off position, i.e. the word "OFF" in the 9 o'clock position, then push in the gas control knob slightly and turn ↻ clockwise to "OFF". NOTE: Knob cannot be turned from "PILOT" to "OFF" unless knob is pushed in slightly. Do not use force.
6. Wait five [5] minutes to clear out any gas. If you then smell gas. STOP! Follow "B" in the safety information above on this label. If you don't smell gas then go to the next step.
7. Now push in the control knob slightly and turn ↺ counter-clockwise to the "PILOT" position.
8. Push in the control knob all the way and hold it. With the other hand push in the red igniter button until you hear a click. Now observe closely the pilot burner located on the rear center-left hand side of the main burner. If a flame has appeared then continue to depress the control knob for 20 seconds. If the flame did not appear then continue to depress the red igniter button every 5 seconds until a flame is established. NOTE: If after 30 seconds a flame has not yet been established then turn the control knob back to the off position and repeat steps 5, 6 & 7.
9. Once the pilot has been established hold the control knob in the depressed position for approximately 25 seconds before releasing. If the flame goes out then repeat steps 7 and 8.
   - If the knob does not pop up when released, stop and immediately call your service technician or gas supplier.
   - If the pilot will not stay lit after several tries, turn the gas control to "OFF" and call your service technician.
10. Now turn the control knob to the "ON" position. The burner will not light unless the wall switch thermostat or remote control is turned "ON" or in the case of the thermostat there is a call for heat.
11. Close the access door and turn all electrical power back to the appliance.

TO TURN OFF THE APPLIANCE

1. Set the thermostat to lowest setting.
2. Turn off all electric power to the appliance if service is to be performed.
3. Open the control access door.
4. Push in the gas control knob slightly and turn ↻ clockwise to the "OFF" position. Do not force.
5. Replace control access panel.

NOTE: Only one on/off device (manual on/off, remote control, or hard wired thermostat) should be connected to the appliance at any one time, this is most important when installing an insert or stove as the on/off rocker switch is installed at the factory.

Recommended Maximum Lead Length (Double Wire)
When Using Wall Switch or Thermostat

Wire Size	Max. Length
14ga	100ft [30.4m]
16ga	64ft [19.5m]
18ga	40ft [12.1m]
20ga	25ft [7.6m]
22ga	15ft [4.5m]

CAUTION: DO NOT WIRE 120V POWER TO MILLIVOLT SWITCHES OR THERMOSTAT.

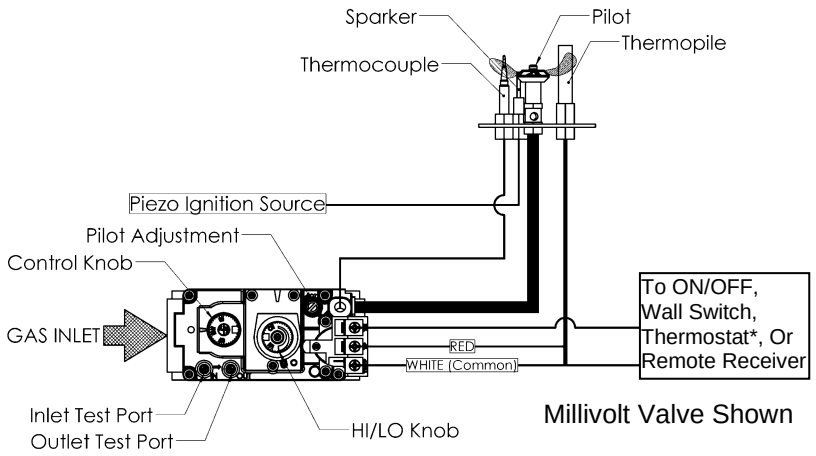

Millivolt Valve Shown

- Lighting Instructions for Millivolt Valve with 7 Day Timer -

FOR YOUR SAFETY READ BEFORE LIGHTING

WARNING: If you do not follow these instructions exactly, a fire or explosion may result causing property damage, personal injury or loss of life.

A. This appliance has a pilot which must be lighted by hand. When lighting the pilot, follow these instructions exactly.

B. **BEFORE OPERATING** smell around the appliance area for gas. Be sure to smell next to the floor because some gas is heavier than air and will settle on the floor.

WHAT TO DO IF YOU SMELL GAS

- Do not try to light any appliance.
- Do not touch any electric switch; do not use any phone in your building.
- Leave the building immediately.
- Immediately call your gas supplier from a neighbor's phone. Follow the gas supplier's instructions.
- If you cannot reach your gas supplier, call the fire department.

C. Do not use this appliance if any part has been under water. Immediately call a qualified service technician to inspect the appliance and replace any part of the control system and any gas control which has been under water.

D. Use only your hand to push in or turn the gas control knob. Never use tools. If the knob will not push in or turn by hand, do not try to repair it; call a qualified service technician. Force or attempted repair may result in a fire or explosion.

OPERATING INSTRUCTIONS

1. **Stop!** Read the safety information above on this label.
2. This appliance is equipped with an on-demand pilot that shuts off after 7 days.
3. Set the thermostat to lowest setting.
4. Turn off all electric power to the appliance.
5. Locate valve under the burner assembly.
6. If the control knob is not already in the off position, i.e. the word "OFF" in the 9 o'clock position, then push in the gas control knob slightly and turn ↻ clockwise to "OFF". NOTE: Knob cannot be turned from "PILOT" to "OFF" unless knob is pushed in slightly. Do not use force.

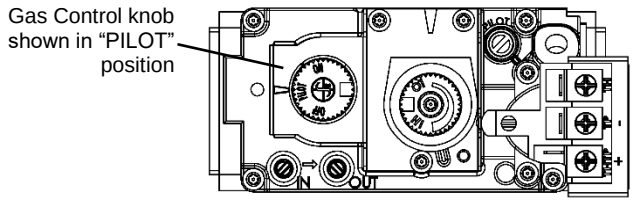

7. Wait five (5) minutes to clear out any gas. Then smell for gas, including near the floor. If you smell gas, STOP! Follow "B" in the safety information above this label. If you do not smell gas, go to next step.
8. Now push in the control knob slightly and turn ↺ counter-clockwise to the "PILOT" position.
9. Push in the control knob all the way and hold it. With the other hand push in the red igniter button until you hear a click. Now observe closely the pilot burner located on the rear center-left hand side of the main burner. If a flame has appeared then continue to depress the control knob until a BEEP is heard. This procedure may take up to TWO MINUTES.
10. If the pilot flame did not appear then continue to depress the red igniter button every 5 seconds until a flame is established. NOTE: If after 30 seconds a flame has not yet been established then turn the control knob back to the off position and repeat steps 7, 8, and 9.
11. Once the pilot has been established hold the control knob in the depressed position for approximately 25 seconds before releasing. If the flame goes out then repeat steps 9 and 10.
    - If the knob does not pop up when released, stop and immediately call your service technician or gas supplier.
    - If the pilot will not stay lit after several tries, turn the gas control to "OFF" and call your service technician.
12. Now turn the control knob to the "ON" position. The burner will not light unless the wall switch thermostat or remote control is turned "ON" or in the case of the thermostat there is a call for heat.
13. Close the access door.
14. Turn on all electric power to the appliance.
15. Set thermostat to desired setting.
16. If the appliance will not operate, follow the instructions "To Turn Off Gas To Appliance" and call your service technician or gas supplier.

TO TURN OFF GAS TO APPLIANCE

1. Set thermostat to lowest setting.
2. Turn off all electric power to the fireplace if service is to be performed.
3. Open the control access door.
4. Push in the gas control knob slightly and turn ↻ clockwise to the "OFF" position. Do not force.
5. Close the control access door.

- IPI LIGHTING INSTRUCTIONS -

FOR YOUR SAFETY READ BEFORE LIGHTING

WARNING: If you do not follow these instructions exactly, a fire or explosion may result causing property damage, personal injury or loss of life.

A. This appliance is equipped with an ignition device which automatically lights the pilot. Do not try to light the pilot by hand.

B. **BEFORE OPERATING** smell around the appliance area for gas. Be sure to smell next to the floor because some gas is heavier than air and will settle on the floor.

WHAT TO DO IF YOU SMELL GAS

- Do not try to light any appliance.
- Do not touch any electric switch; do not use any phone in your building.
- Immediately call your gas supplier from a neighbor's phone. Follow the gas supplier's instructions.
- If you cannot reach your gas supplier, call the fire department.

C. Do not use this appliance if any part has been under water. Immediately call a qualified service technician to inspect the appliance and replace any part of the control system and any gas control which has been under water.

D. If the gas valve requires repair, call a qualified service technician. Force or attempted repair may result in a fire or explosion.

OPERATING INSTRUCTIONS

1. Stop! Read the safety information above on this label.
2. Read the owner's manual including the section on "Remote Control" operation if applicable.
3. Turn off all electric power to the appliance.
4. This appliance is equipped with an ignition device which automatically lights the pilot. Do not try to light the pilot by hand.

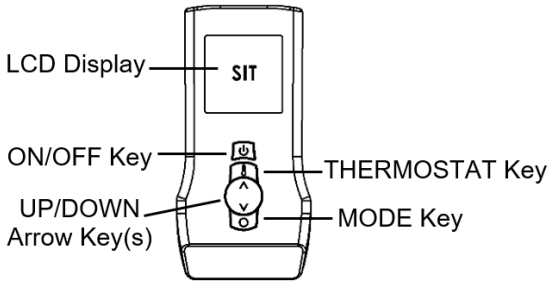

5. Wait five (5) minutes to clear out any gas. Then smell for gas, including near the floor. If you smell gas, STOP! Follow "B" in the safety information above this label. If you do not smell gas, go to next step.
6. Turn on all electric power to the fireplace.
7. Turn "On" Switch that operates the Main Burner. For **Remote Control** units, press the ON/OFF key on the remote control. "ON" will be displayed on the LCD display and a "beep" will be heard at the unit to indicate the command has been received.
8. If the appliance will not operate, follow the instructions "To Turn Off Gas To Appliance" and call your service technician or gas supplier.

TO TURN OFF GAS TO APPLIANCE

1. Set thermostat to lowest setting. For **Remote Control** units, press the ON/OFF key on the remote control. "OFF" will be displayed on the LCD display and a "beep" will be heard at the unit to indicate the command has been received.
2. Turn off all electric power to the fireplace if service is to be performed.

Proflame 1 IPI Electronic Ignition System

Overview

The IPI system is an advanced burner controller that provides you with the option of having either a Standing-Pilot, or an intermittent igniting system. This alternating mode is controlled by the CPI/IPI Switch (Continuous Pilot Ignition/Intermittent Pilot Ignition) located on the IPI System Box. The difference between a Standing-Pilot and an Intermittent-Pilot is in whether the pilot stays lit or shuts off:

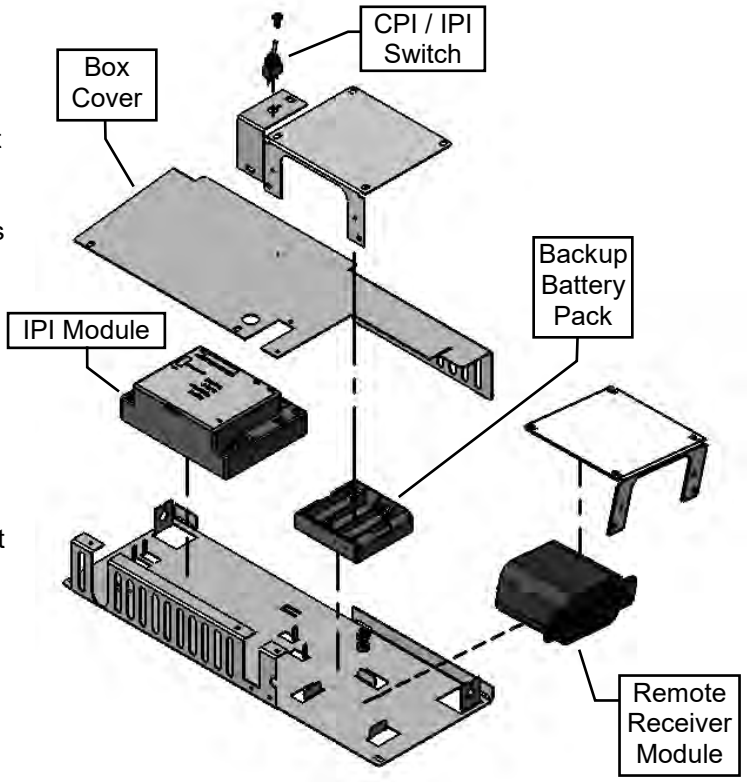

In Standing-Pilot, the pilot assembly is lit by the IPI Main Module and continues to stay lit until 1) the CPI/IPI Switch is switched to the IPI position; 2) a loss of electrical power (battery and AC source), 3) the flame sensor loses its signal, 4) the fuel supply discontinues, or 5) the IPI Main Module malfunctions.

In the Intermittent-Pilot mode, the pilot shuts off when the appliance is not in use. The advantage of this mode is that fuel is not consumed when the fireplace is not operating.

NOTE: In some jurisdictions Intermittent-Pilot is required. That means the pilot cannot remain lit when the appliance is not operating.

Components

The core of the IPI system is the Main Module and the IPI Valve. With these two components the system is able to operate a gas fireplace. There are also other components available to complement the IPI system.

IPI System Cover: Is essential in keeping the components at their proper operating temperatures. **DO NOT OPERATE THE APPLIANCE WITHOUT THIS COVER.**

Modulating Servo Motor: Is an add-on valve component that permits HI/LO functionality to be controlled by the remote. Contrary to this feature is a Manual HI/LO Control Knob. The Modulating Servo Motor requires the Remote system to be present.

Backup Battery Pack: This component permits the IPI system to operate without the need for an external AC Adapter power source. The advantage to using the battery backup is that in the case of a power failure, the appliance is still operable.

NOTE: In certain instances the IPI Main Module requires resetting. This can occur if the system is unable to ignite the pilot or the main burner in the allotted time period. The IPI is programmed to lockout all commands. To reset this lockout you must deplete the system of all electrical power. This means to remove the batteries from the Battery Pack, remove the batteries from the Remote Receiver (if applicable), and disconnect the AC Adapter from the system. Leave the power off for approximately 25 seconds to clear its lockout.

Remote Receiver: This component provides the capability of controlling the appliance with a wireless remote transmitter.

Standing Pilot Mode for Colder Climates (Below Freezing)

For IPI models it may be necessary to set the appliance to Standing Pilot mode to maintain heat in the cavity. The purpose of this procedure is to prevent cold air from penetrating the chimney and then onto the living space. Therefore, when the internal temperature is slightly elevated the fireplace is able to freely exhaust its combustion and hence making it easier to startup.

Standing Pilot Mode for Colder Climates (Below Freezing)
For IPI models it may be necessary to set the appliance to Standing Pilot mode to maintain heat in the cavity. The purpose of this procedure is to prevent cold air from penetrating the chimney and then onto the living space. Therefore, when the internal temperature is slightly elevated the fireplace is able to freely exhaust its combustion and hence making it easier to startup.

NOTE: The pilot system for this appliance may be equipped with a Seven Day Timer, in which case the pilot flame will be extinguished if the main burner has not been turned ON for seven days. This Seven Day Cycle is reset every time the main burner is cycled ON / OFF and the pilot remains lit. If more than seven days has passed since the main burner has been cycled ON / OFF and the pilot is also out, follow the procedures described in this manual to light the pilot.

Proflame 1 -Remote Control Operation-

The Proflame GTM is configured to control the on/off main burner operation, its flame levels, and provides on/off and Smart *thermostatic control of the appliance.

Transmitter

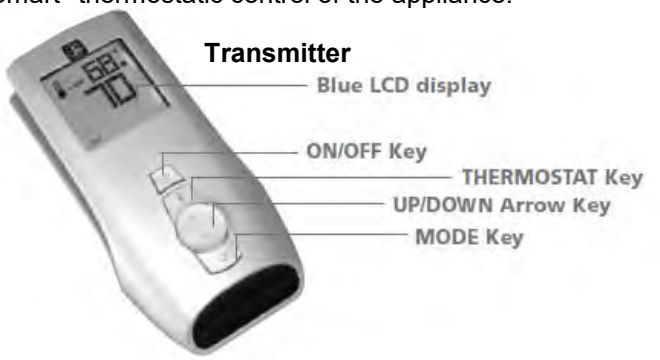

Remote Receiver



Transmitter
The Transmitter is powered by 3 AAA type batteries. A Mode Key is provided to Index between the features and a *thermostat Key is used to turn on/off or index through *thermostat functions

Remote Receiver
The Receiver connects directly to the gas valve and stepper motor with a wiring harness. The Receiver is powered by 4 AA type batteries. The Receiver three position slider switch can be set to one of three positions: ON (Manual Override), Remote (Remote control) or Off.

Initializing the System for the first time
Install 4 AA batteries into the receiver battery bay. Install 3 AAA type batteries in the Transmitter battery bay.
Place the 3 position slider switch in the “Remote” position. Insert the end of a paper clip into the hole marked “PRG” on the Receiver front cover. The Receiver will “beep” three (3) times to indicate that it is ready to synchronize with a Transmitter. Push the On button. The Receiver will “beep” four times to indicate the Transmitter’s command is accepted. The system is now initialized.

Temperature indication Display
With the system in the “OFF” position, press the *thermostat Key and the Mode Key at the same time. Look at the LCD screen on the Transmitter to verify that a C or F is visible to the right of the Room Temperature display.

Turn the Appliance On or Off
Press the ON/OFF Key on the Transmitter

Remote Flame Control
The Proflame GTM has six (6) flame levels. Pressing the Down Arrow Key once will reduce the flame height by one step until the flame is turned off. The Up Arrow Key will increase the flame height each time it is pressed. If the Up Arrow Key is pressed while the system is on but the flame is off, the flame will come on in the high position.

Room *thermostat (Transmitter Operation)
The Remote Control can operate as a room *thermostat. To activate this function, press the *thermostat Key. The LCD display on the Transmitter will change to show that the room *thermostat is “ON” and the set temperature is now displayed. To adjust the set temperature, press the Up or Down Arrow Keys until the desired set temperature is displayed on the LCD screen of the Transmitter.

Smart *thermostat (Transmitter Operation)
The Smart *thermostat function adjusts the flame height in accordance to the difference between the set point temperature and the actual room temperatures. As the room temperature gets closer to the set point the Smart Function will modulate the flame down. To activate this function, press the *thermostat Key until the word "SMART" appears to the right of the temperature bulb graphic. To adjust the set temperature, press the Up or Down arrow Keys until the desired set point temperature is displayed.

Key Lock Function
This function will lock the keys to avoid unsupervised operation. To activate this function, press the MODE and the UP Arrow Key at the same time. To de-activate this function, press the MODE and the UP Arrow Key at the same time.

Low Battery Detection
Transmitter - When the Transmitter batteries are low, a Battery Icon will appear on the LCD display of the Transmitter.
Receiver - When the Receiver batteries are low, No “beep” will be emitted from the Receiver when it receives an On/Off command from the Transmitter. When the batteries are replaced the “beep” will be emitted from the Receiver when the ON/OFF Key is pressed (See Initializing the System for the first time).

Manual Bypass Of The Remote System
If the batteries of the Receiver or Transmitter are low or depleted, the appliance can be turned on manually by sliding the three position slider switch on the Receiver to the ON position. This will bypass the remote control feature and the appliance main burner will come on if the gas valve is in the “On” position.

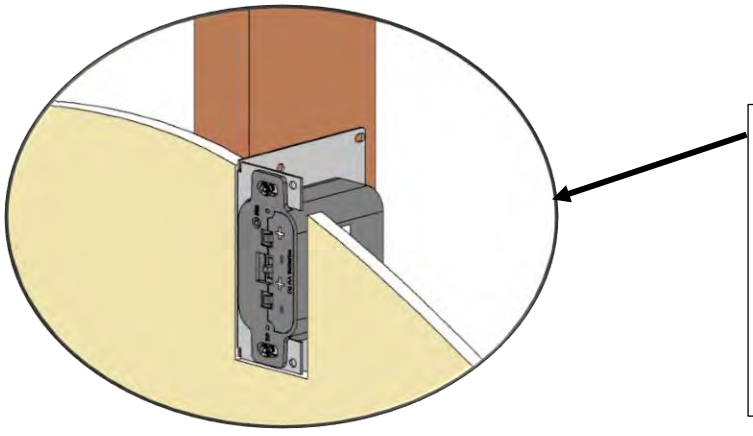

<u>Wall Mount Option</u>

10ft. Extension Harness (Part No. 1001-P904SI) required.

- The Remote Receiver can be mounted on a vertical wall stud using the DCHS as a mounting bracket.
- Ensure that the face is protruding 1/2” so that the face plate will be flush on the face of the wall.
- Drywall cutout size is 2” wide by 4-1/8” tall.
- Must be installed within 10ft of valve assembly (6ft recommended).

SIT Proflame 1 -IPI System Parts List-

	PART NO.	DESCRIPTION
1.	1006-P002SI	Valve IPI Hi/Lo NG
2.	1006-P003SI	Valve IPI Hi/Lo LP
3.	1002-P322SI	IPI Ignition Board
4.	1002-P047SI	Pilot Assembly-LP -24" Wire
5.	1002-P033SI	Pilot Assembly-NG -24" Wire
6.	1002-P850SI	AC Wall Adapter
7.	1002-P12BH	Battery Pack
8.	1001-P280SI	TC - Tubing W/Fittings 1/8 2.182.280
9.	1001-P166SI	TC - Orifice Pilot NG 977.166 #62 (IPI)
10.	1001-P168SI	TC - Orifice Pilot LP 977.168 #35 (IPI)
11.	1002-P012SI	IPI Stepper Kit - LP 907.012
12.	1002-P013SI	IPI Stepper Kit - NG 907.013
13.	1002-P014SI	IPI Reg Kit - LP Hi-Lo 907.014
14.	1002-P016SI	IPI Reg Kit - NG Hi-Lo 907.016
15.	1002-P017SI	TC - Electrode Cable & Sparker IPI 915.017 24"
16.	1002-P119SI	TC - Electrode Cable & Sparker IPI 35" (Infinite, ZCVRB47, VRB46)
17.	1002-P903SI	TC - Electrode Flame Sense IPI 007.253/915.903 24"
18.	1002-P910SI	TC - Electrode Flame Sense 35" (Infinite, ZCVRB47, VRB46)

NOTE: Fan and / or Light Options are not available on some fireplaces. **Check with your dealer.**



Proflame Transmitter
1001-P023SI

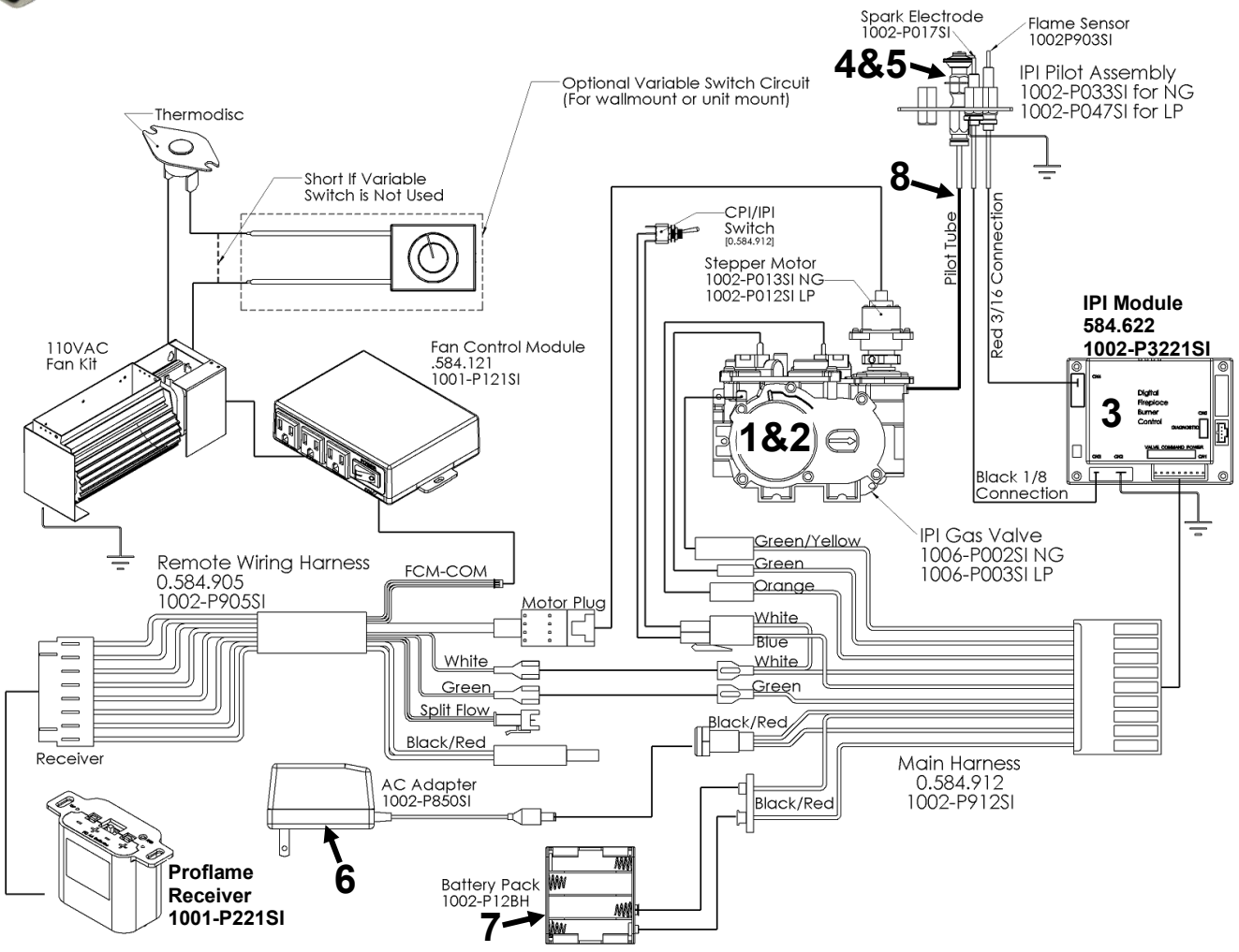

SIT Proflame 1 Configuration #1: Basic Manual HI/LO and ON/OFF capabilities

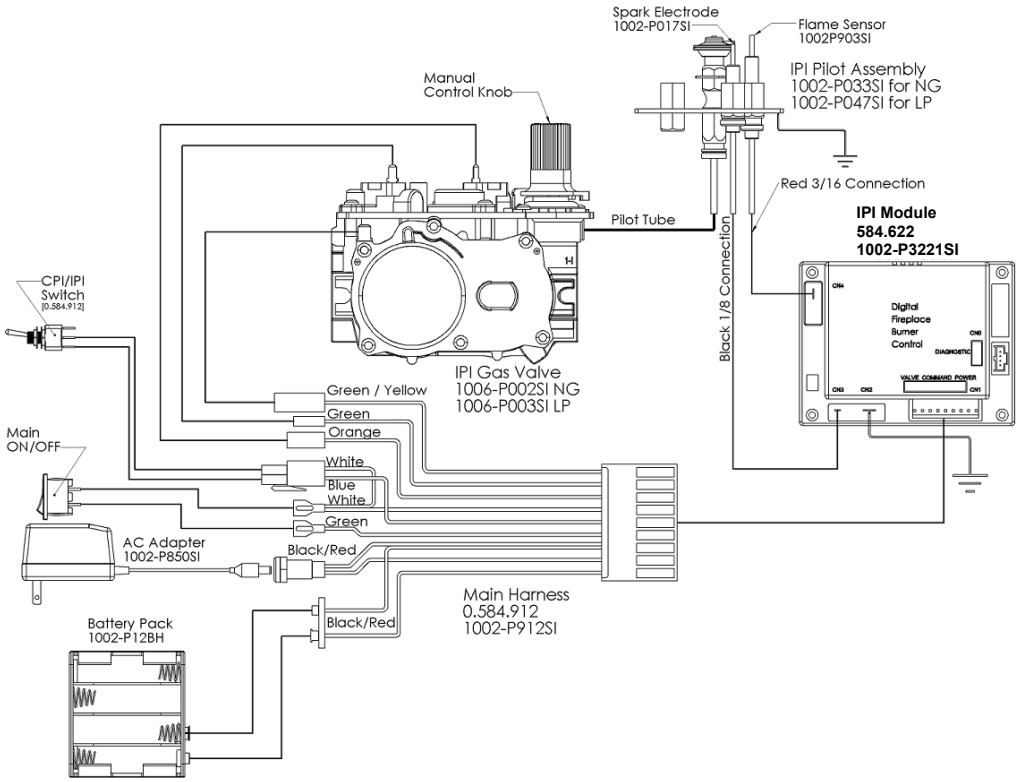

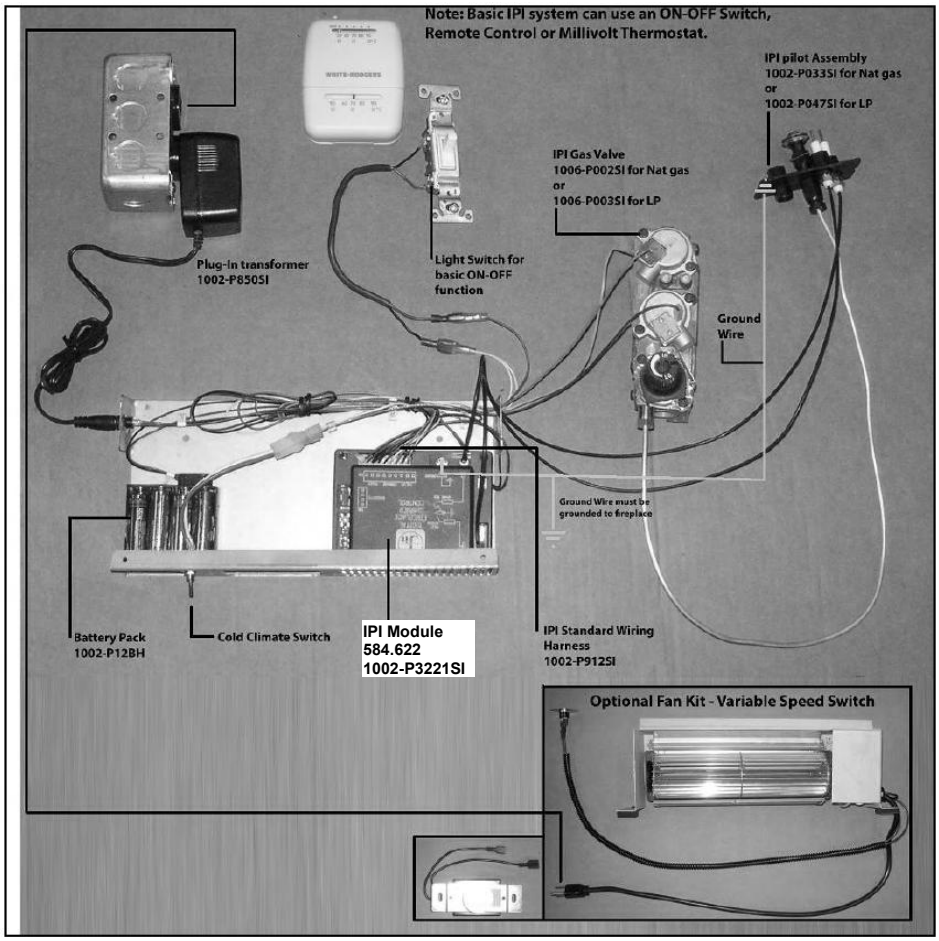

SIT Proflame 1- Configuration #2: Remote ON/OFF and Manual HI/LO Capabilities

OPTIONAL: For units with remote HI/LO capabilities, a modulating servo is required to be installed on the valve. The connectors to this servo must be connected to the Remote Harness as shown.

SCHEMATIC

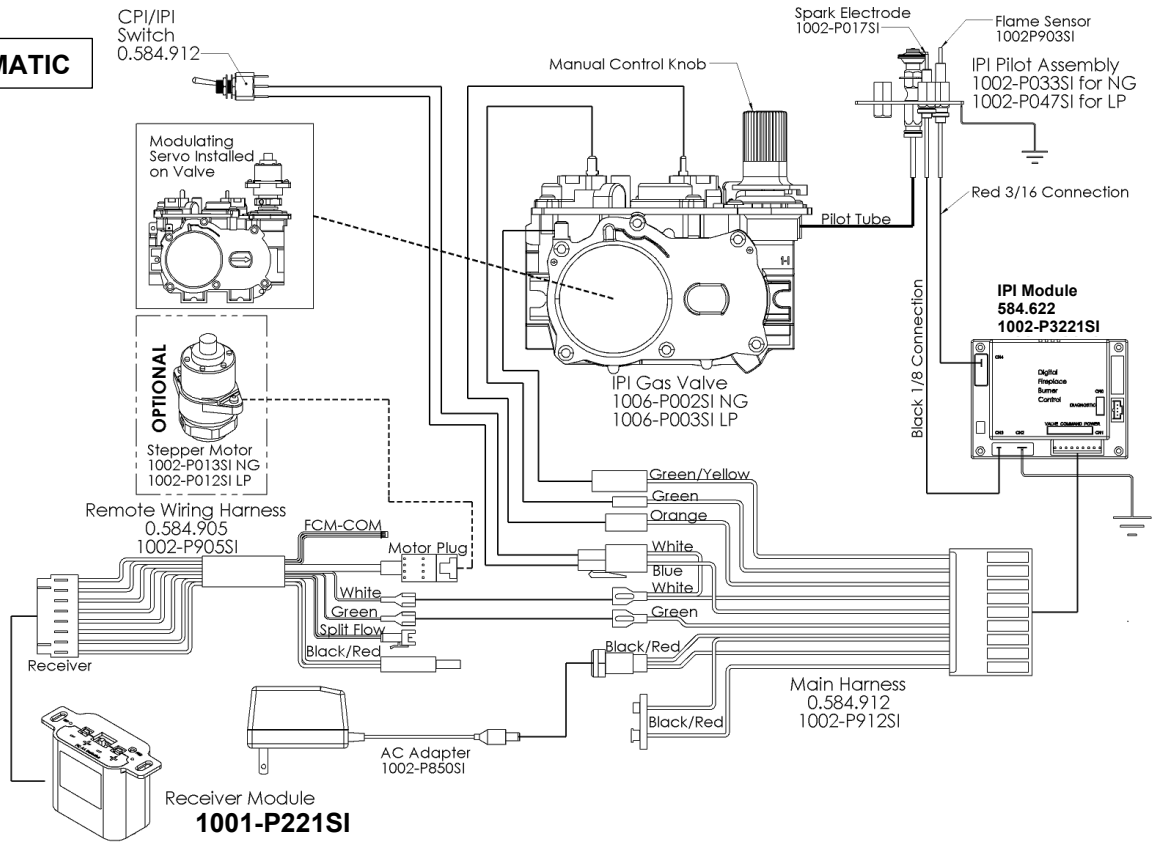

PICTURE

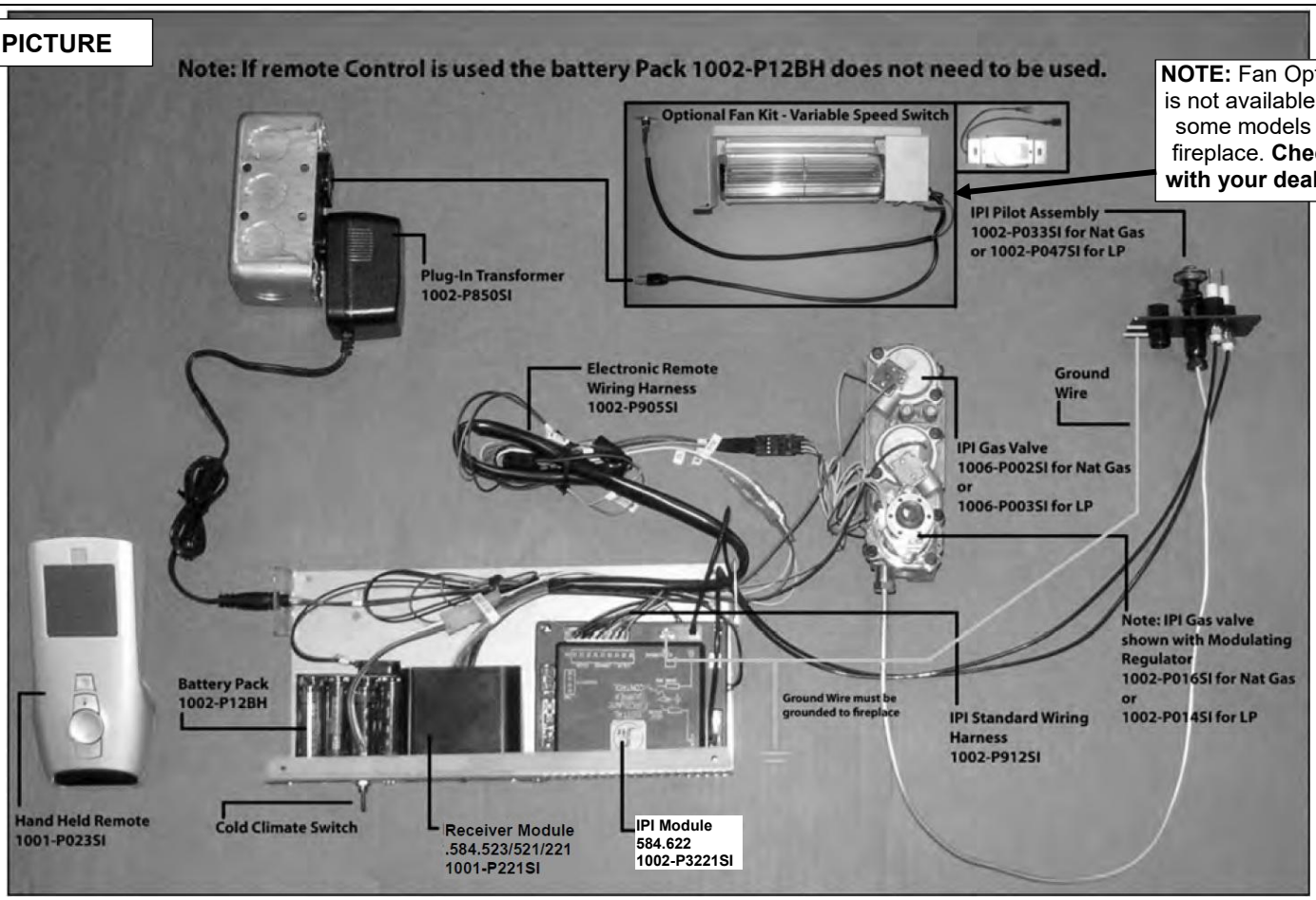

NOTE: Fan Option is not available on some models of fireplace. **Check with your dealer.**

SIT Proflame 1 -Operating Receiver Without Batteries- GT / EGT / GTM / EGTM Remotes

-Wiring Harness P/N 1002-P906si required for both IPI & Millivolt systems.
-Millivolt Systems will also require Power Adapter P/N 1002-P850si.

The Remote Receiver & IPI or Millivolt system can be powered by the AC Adapter. This is advantageous if you do not want to use batteries. Simply connect the AC Adapter into the Remote Control Wiring Harness as per the diagrams below.

IPI System EGTM

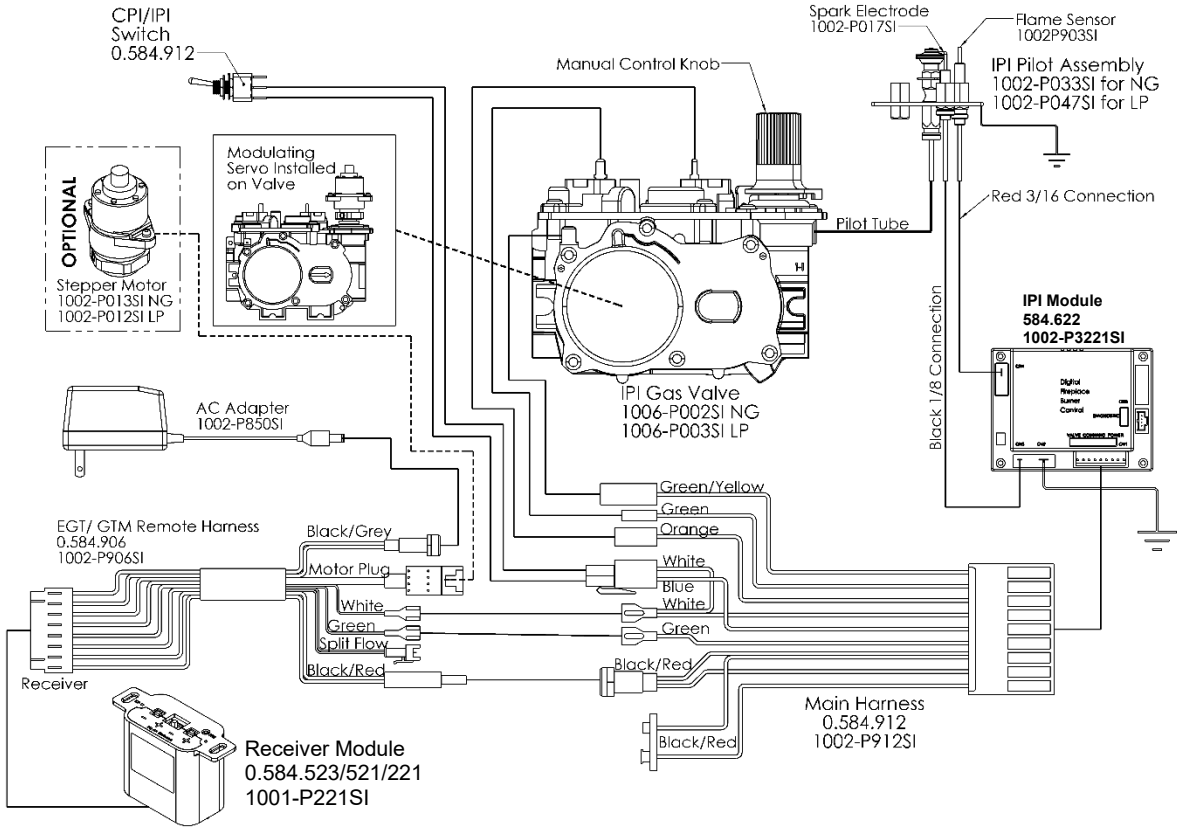

Millivolt System GTM

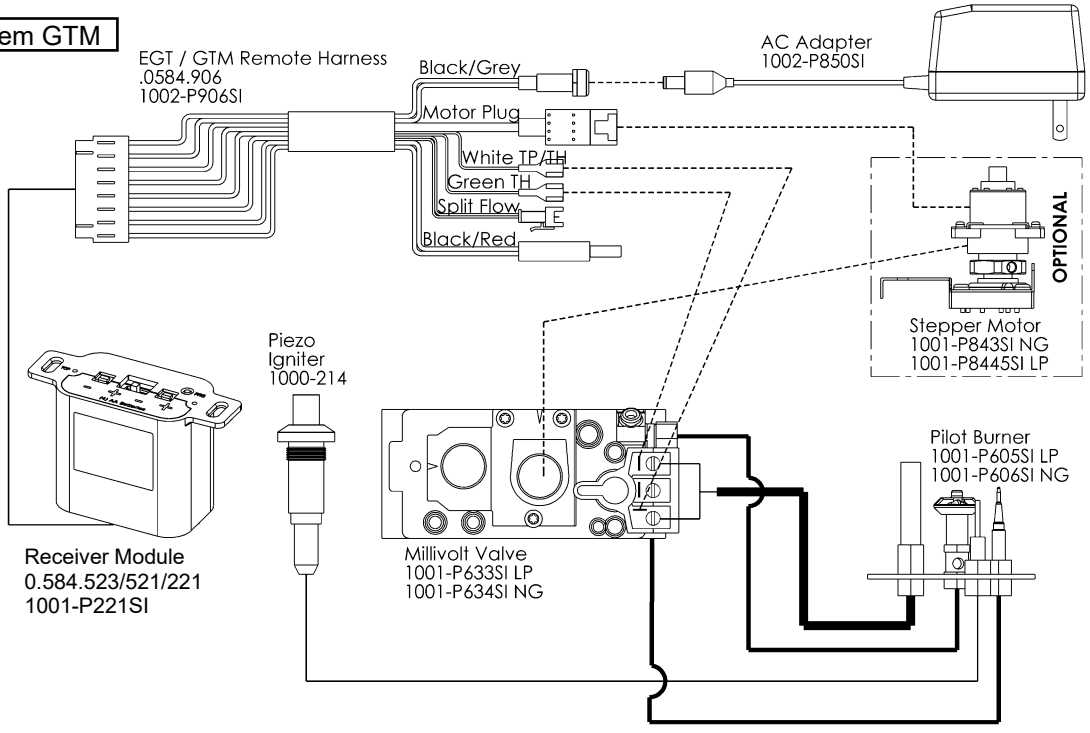

SIT Proflame 1- Configuration #3: Remote ON/OFF, variable HI/LO, and fan capabilities

Refer to the fan installation/removal section for fan installation.

SCHEMATIC

NOTE: This Configuration is not available on all models of fireplace. **Check with your dealer.**

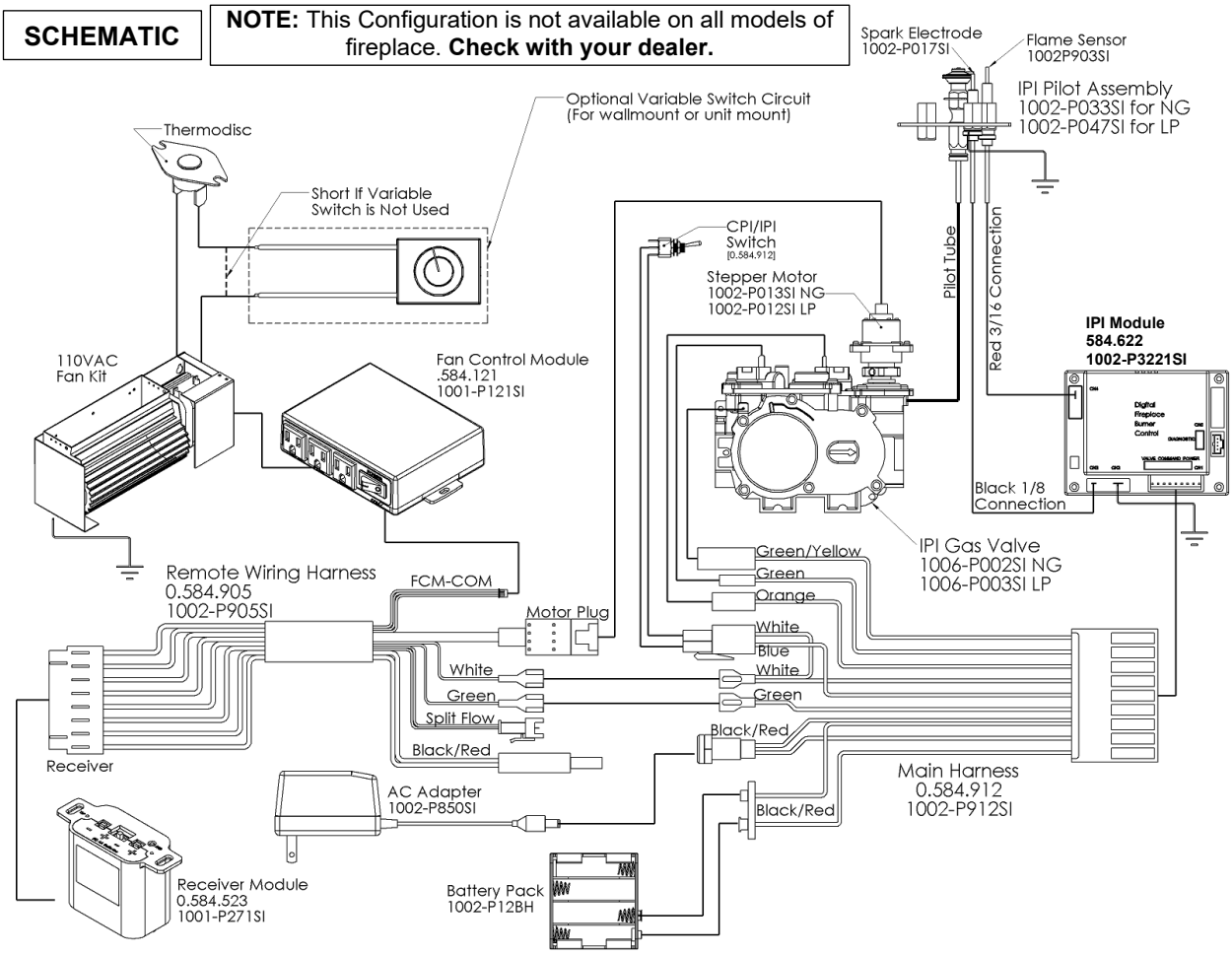

PICTURE

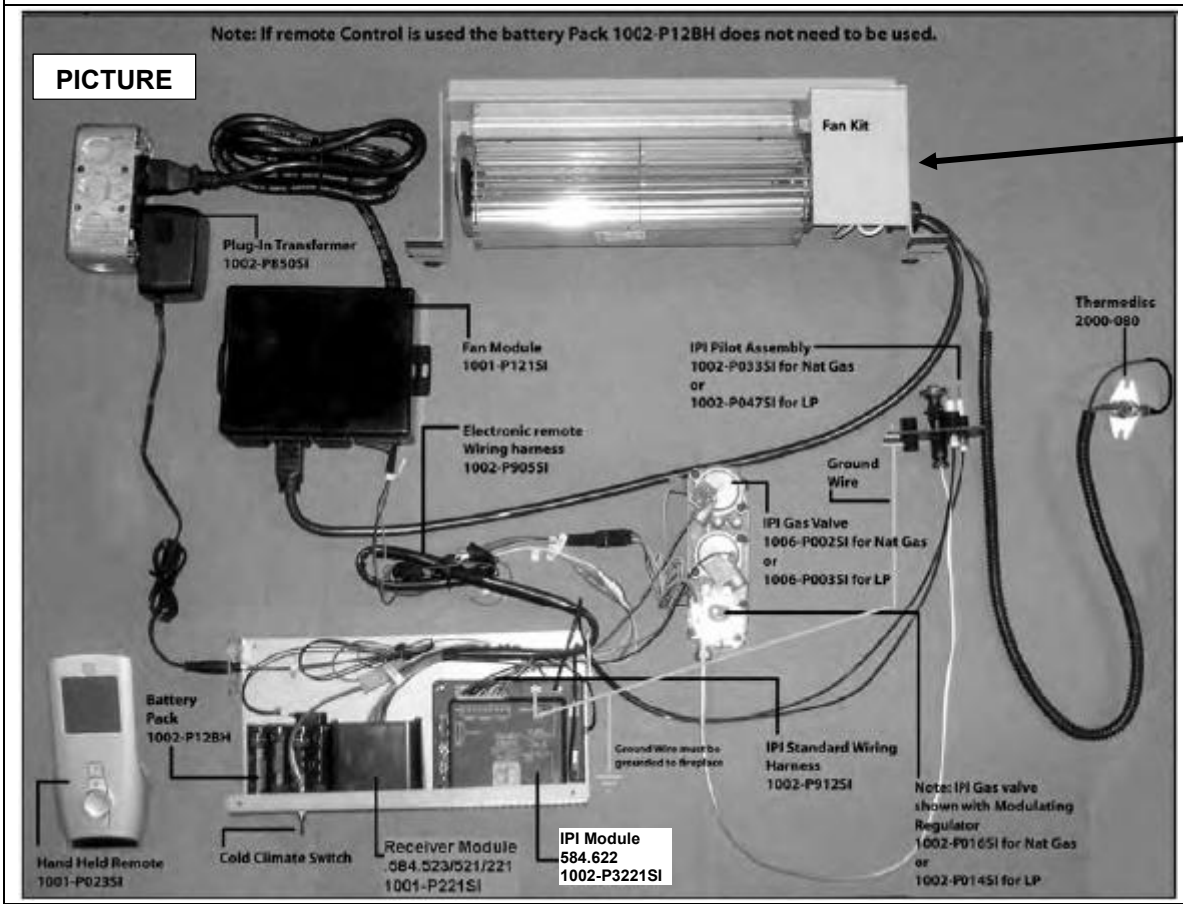

NOTE: Fan Option is not available on some models of fireplace. **Check with your dealer.**

Proflame 2 –NE2 / LPE2 -IPI System Parts List-

IPI PROFLAME 2 - COMPONENT PARTS		
	PART NO.	DESCRIPTION
1.	1005-P001SI	Valve IPI Proflame PF2 885.001 NG - Stepper
2.	1005-P002SI	Valve IPI Proflame PF2 885.002 LP - Stepper
3.	1005-P325SI	Module IPI - Proflame 2 - 584.665
4.	1005-P627SI	Module IPI – Proflame 2 - Basic - 584.627 (N/A)
5.	1005-P924SI	Harness PF2 - 584.924
6.	GTMFL	Transmitter- PF2 - 584.090 - WiFi Version
6b.	1005-P042SI	Transmitter- PF2 - 584.042 - Non-WiFi Version
6c.	1005-P080SI	Transmitter- PF2 - 584.080 - WiFi Version
For Replacement Transmitters, Replace with Same Part Number		
7.	584-PWR-C	Wire Harness PF2 – Power Cord
8.	584-X4P	Terminal Block
9.	584-X10	Wire Harness PF2
10.	584-ACC01-C	Wire Harness PF2 - Fan/Light
11.	584-X8-B	Wire Harness PF2 - Optional Reset Harness
12.	584-X12	Optional Power Vent Harness

IPI - PF1 and PF2 Common Components			
	PART NO.	DESCRIPTION	
13.	1002-P033SI	TC - Pilot Burner IPI (Assembled) NG 199.033	
14.	1002-P047SI	TC - Pilot Burner IPI (Assembled) LP 199.047	
15.	1001-P166SI	TC - Orifice Pilot NG 977.166 #62 (IPI)	
16.	1001-P168SI	TC - Orifice Pilot LP 977.168 #35 (IPI)	
17.	1001-P280SI	TC - Tubing W/Fittings 1/8 2.182.280	
18.	1002-P012SI	IPI Stepper Kit - LP 907.012	P2 CONVERSION
19.	1002-P013SI	IPI Stepper Kit - NG 907.013	
20.	1002-P014SI	IPI Reg Kit - LP Hi-Lo 907.014	P1 CONVERSION
21.	1002-P016SI	IPI Reg Kit - NG Hi-Lo 907.016	
22.	1002-P017SI	TC - Electrode Cable & Sparker IPI 915.017 24"	
23.	1002-P119SI	TC - Electrode Cable & Sparker IPI 35" (Infinite, ZCVRB47, VRB46)	
24.	1002-P12BH	IPI Battery Housing 12bh347-Gr	
25.	1002-P903SI	TC - Electrode Flame Sense IPI 007.253/915.903 24"	
26.	1002-P910SI	TC - Electrode Flame Sense 35" (Infinite, ZCVRB47, VRB46)	

6 **Proflame Transmitter**
0.584.090 - WiFi
Current Version



6b **Proflame Transmitter**
0.584.042 - Non-WiFi

6c **Proflame Transmitter**
0.584.080 - WiFi



NOTE: Fan and / or Light Options are not available on some fireplaces. **Check with your dealer.**

NOTE: When in Thermostat Mode, the fan has a 5-minute startup delay, and a 12-minute shutdown delay.

Proflame 2 IPI - IFC Module and Remote Control

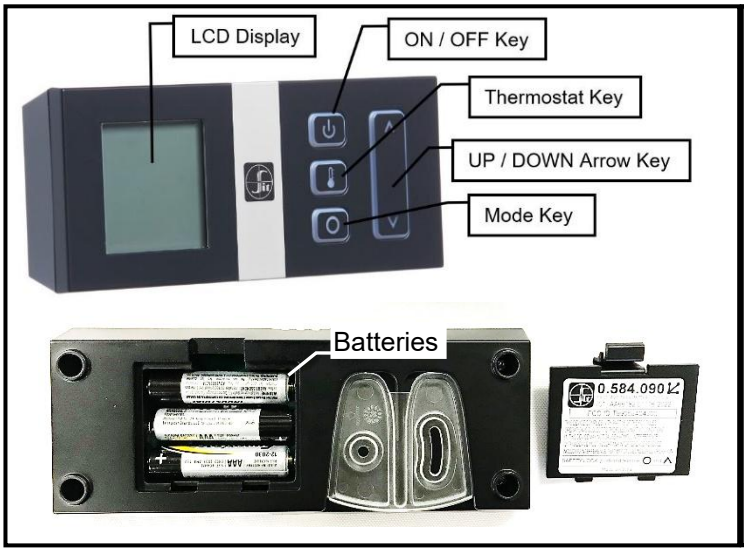

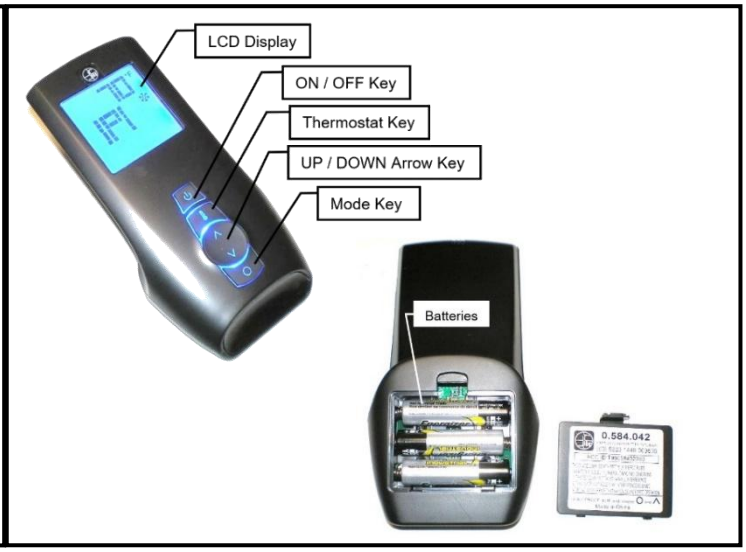

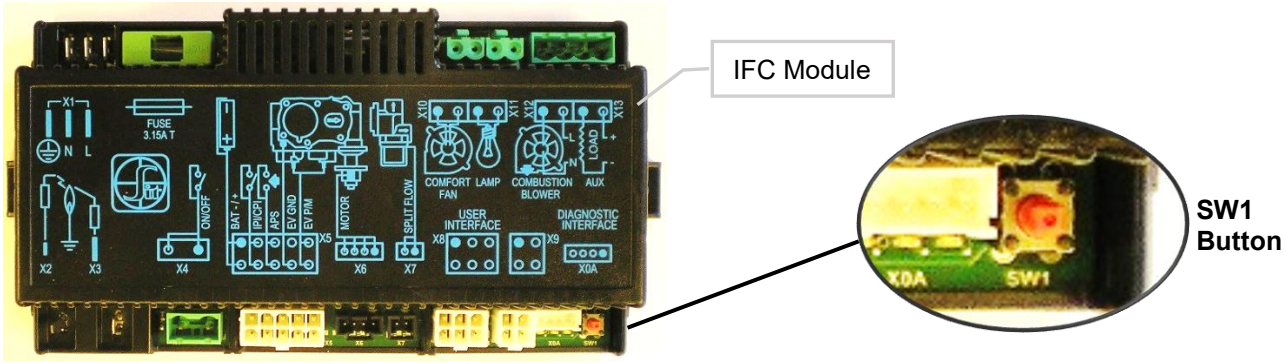

Pairing Remote Control:

- Install the 3 AAA type batteries in the battery bay, located on the base of the Remote Control. Note polarity of the batteries and insert them as indicated.
- Connect the AC power supply to the IFC Module.
- Press the SW1 button on the IFC Module so the IFC will “beep” and a red LED is illuminated to indicate that the IFC Module is ready to synchronize with a Remote Control within 10 seconds. With the batteries already installed in the Remote Control, push the ON button. The receiver will “beep” four times to indicate the Remote Control’s command is accepted.

The system is now initialized.

Resetting Proflame 2 IFC Module for Manual Use

If the transmitter gets misplaced, is broken, or is no longer wanted the PF2 Module can be reset to a manual system. A manual on/off switch or thermostat may be installed at the X4 connector (this connection is Jumped at the factory) no power is required.

Note: the fireplace accessories (fan, lights) will retain the last settings they had before being reset to manual mode.

The following sequence must be followed to reset the PF2 Module:

- Press the Red **SW1** button until you hear three beeps.
- Within 10 seconds press the **SW1** button again until you hear it beep.
- The PF2 Module may now be turned on/off manually (x4 connector) by a switch (not supplied), the pilot will remain on CPI (continuous pilot ignition) mode, all other functions of main burner, fan and lights will be on the high setting.

Fan Startup and Shutdown Timings:

Fan setting is started with a delay of 5 minutes from the fireplace ignition and stopped with a delay of 12 minutes from the fireplace switching off.

Low Battery Power Detection

When the Remote Control’s batteries are low, a Battery Icon will appear on the LCD display before all power is lost. When the batteries are replaced, this icon will disappear.

Battery Backup

The PF2 module is powered by line voltage (AC) with provision of battery backup in case of main power loss. Fans and lighting features will not function with the PF2 Module is powered by battery backup. It is recommended that the 4 x AA batteries are changed before each heating season.

24 Hour Safety Shut Off

If a transmission (user action) has not been detected by the receiver within 24 hours, the system will shut off as a safety feature.

Proflame 2 IPI - Cold Climates – CPI Setting - Proflame 2 Remote Control

Use the CPI setting during cold weather, otherwise the fireplace may have a hard time starting up and establishing a flame. The **CPI** (Continuous Pilot Ignition) setting will keep the firebox and fireplace exhaust vent warm during cold weather. When the firebox and exhaust vent are warm, exhaust gasses will readily flow out of the firebox.

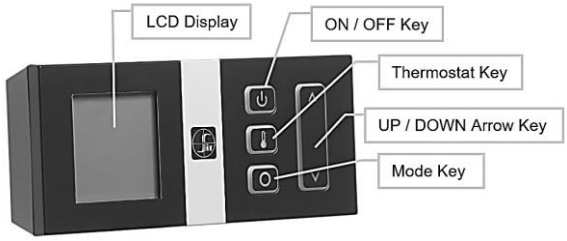



If the firebox and venting are too cold, there is resistance due to the heavy cushion of cold air, and combustion gasses may not rise into the exhaust vent, thus causing the fireplace to cycle or **Lockout** (if this happens see ***Lockout Reset Procedures*** below).

NOTE: The pilot system for this appliance may be equipped with a **Seven Day Timer**, in which case the pilot flame will be extinguished if the main burner has not been turned ON for seven days. This Seven Day Cycle is reset every time the main burner is cycled ON / OFF and the pilot remains lit. If more than seven days has passed since the main burner has been cycled ON / OFF and the pilot is also out, follow the procedures described in this manual to light the pilot.

To switch from IPI to CPI Mode:

1. Turn the fireplace OFF using the **ON / OFF Key**.



2. Press the **Mode Key**. Display will appear as below.



3. Press UP on the **UP / DOWN Arrow Key**.
Display will show **CPI.**

The module in the fireplace will beep once to confirm command.



TO RETURN TO IPI (INTERMITTENT PILOT) MODE:

Repeat steps one and two, and then press DOWN on the **UP / DOWN Arrow Key**.

The module in the fireplace will beep once to confirm command.

Lockout Reset Procedures – Proflame 2

If the fireplace has cycled too many times in a short period of time, it will shut down and become unresponsive to any new command.

The LED light on the Proflame 2 module in the fireplace will be flashing red.

This condition is a **Lockout** state.

Lockout Reset Procedure:

1. Disconnect power from the Proflame 2 module in the fireplace for 10 seconds. This includes removing the backup batteries.
2. Once the 10 second interval has passed, reconnect power and reinstall backup batteries. The pilot should now try to light.
3. If the fireplace does not come on, call your fireplace technician.

Proflame 2 Remote Control

Remote-Flame Control

The proflame has six (6) flame levels. With the system on, and the flame level at the maximum in the appliance, pressing the Down Arrow Key once will reduce the flame height by one step until the flame is turned off.
The Up Arrow Key will increase the flame height each time it is pressed. If the Up Arrow Key is pressed while the system is on but the flame is off, the flame will come on in the high position. (Fig. 7 & 8) A single "beep" will confirm reception of the command.

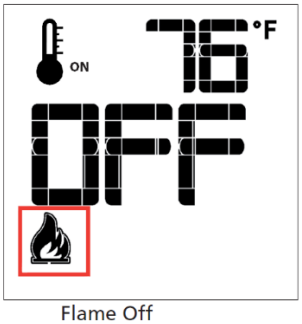

Fig. 7: Flame Off

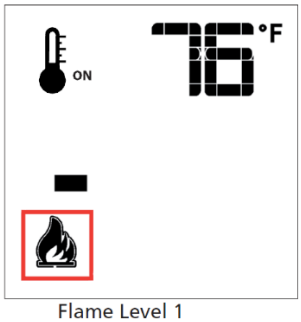

Flame Level 1

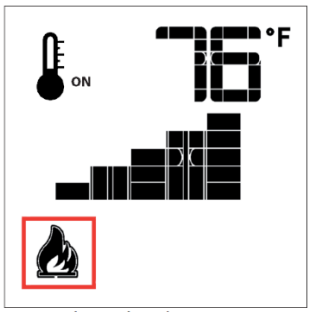

Fig. 8: Flame level 5

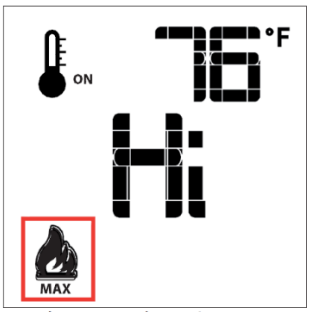

Flame Level Maximum

Room Thermostat (Transmitter Operation)

The Remote Control can operate as a room thermostat. The thermostat can be set to a desired temperature to control the comfort level in a room.
To activate this function, press the Thermostat Key (Fig. 1). The LCD display on the Transmitter will change to show that the room thermostat is "ON" and the set temperature is now displayed (Fig. 9). To adjust the set temperature, press the Up or Down Arrow Keys until the desired set temperature is displayed on the LCD screen of the Transmitter.

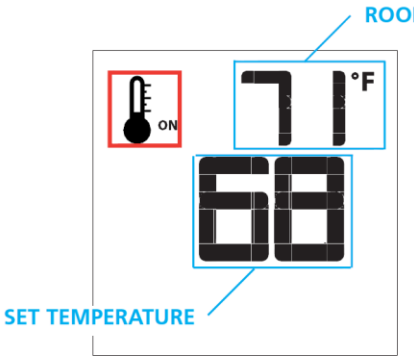

Fig. 9

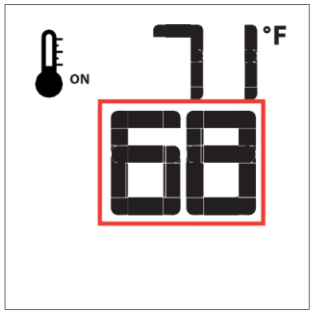

Fig. 10

Smart Thermostat (Transmitter Operation)

The Smart Thermostat function adjusts the flame height in accordance to the difference between the set point temperature and the actual room temperatures. As the room temperature gets closer to the set point the Smart Function will modulate the flame down.
To activate this function, press the Thermostat Key (Fig. 1) until the word "SMART" appears to the right of the temperature bulb graphic (Fig. 11).
To adjust the set temperature, press the Up or Down Arrow Keys until the desidered set temperature is displayed on the LCD screen of the Transmitter (Fig. 12).

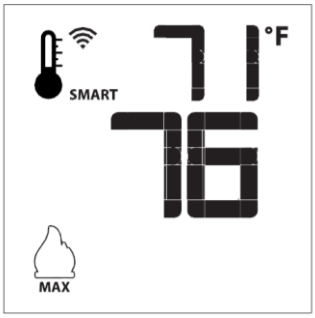

Fig. 11: Smart flame function

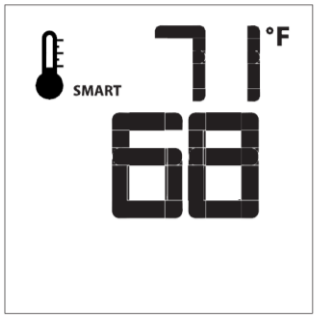

Fig. 12

Note:
When Smart Thermostat is activated, manual flame height adjustment is disabled.

Fan Speed Control

If the appliance is equipped with a hot air circulating fan, the speed of the fan can be controlled by the Proflame system. The fan speed can be adjusted through six (6) speeds. To activate this function use the Mode Key (fig.1) to index to the fan control icon (Fig. 13). Use the Up/Down Arrow Keys (Fig.1) to turn on, off or adjust the fan speed (fig. 14). A single "beep" will confirm reception of the command.



Fig. 13

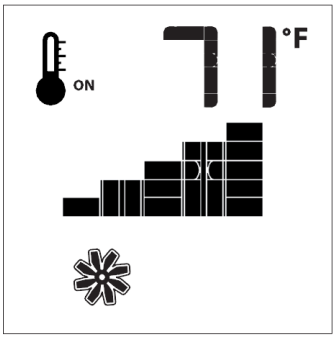

Fig. 14

Remote dimmer control (Halogen lights only)

The auxiliary function controls the AUX power outlet by the dimmable light control. To activate this function use the Mode Key (fig. 1) to index to the AUX icon (fig. 15 & 16).
The intensity of the output can be adjusted through six (6) levels. Use the Up/Down Arrow Keys (Fig.1) adjust the output level (fig. 16). A single "beep" will confirm reception of the command.

Note:
This function is only available in Room Thermostat or Smart Thermostat Control Mode.



Fig. 15

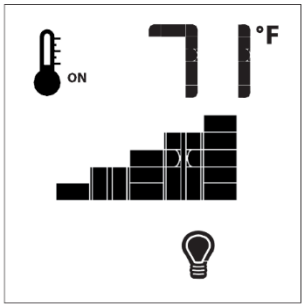

Fig. 16

WMBH – Wall Mount Battery Holder – Proflame 1 and 2 IPI Models - Option

The WMBH provides the option for a more convenient and accessible location for the backup batteries.
NOTE: The WMBH is **NOT** a remote control receiver. It functions as a Battery Holder and mode selector switch **ONLY**.

⚠ CAUTION- DO NOT PLUG THE ORIGINAL BATTERY HOLDER SUPPLIED WITH THE APPLIANCE INTO THE WMBH WIRING HARNESS. - NOT FOR USE WITH POWER VENTS -

Parts List:
[1] Battery Holder
[1] DCHS Mount Bracket
[1] Wall Mount Cover Plate
[1] 16 ft. Wiring Harness

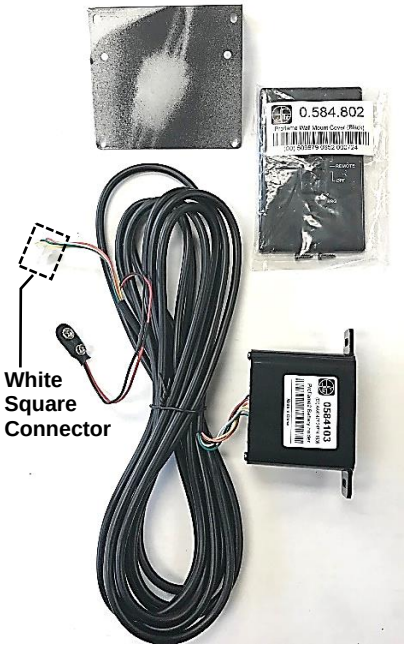

Installation:

- The Battery Holder can be mounted on a vertical wall stud using the DCHS as a mounting bracket.
- Ensure that the face is protruding 1/2” so that the face plate will be flush on the face of the wall.
- Drywall cutout size is 2” wide by 4-1/8” tall.
- Must be installed within 16ft of valve assembly (12ft recommended).

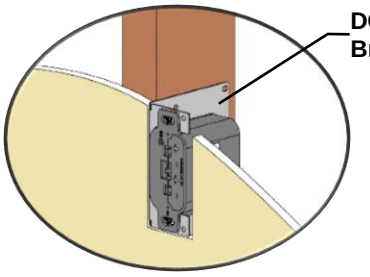



Operating Instructions:

- **Proflame 1:** Set the switch on the Battery Holder to either the **ON** or **REMOTE** position. The WMBH functions as a battery backup should a power outage occur.
- **Proflame 2:** Set the switch on the Battery Holder to the **REMOTE** position. **NOTE:** If the switch on the Battery Holder is set to **ON**, the remote control will be disabled. The WMBH functions as a battery backup should a power outage occur. Refer to the manual that accompanies the Battery Holder for further instructions.

Proflame 1:
-Plug **Battery Connector** into **Battery Holder** connection on wiring harness.

-The **Square Plug Connector** on the 16ft wiring harness is not used.

Proflame 2:
-Plug the **Square Plug Connector** into the **User Interface Socket** in the P2 Module.
-Plug the **Battery Connector** into **Battery Holder** connection on the Proflame 2 wiring harness.

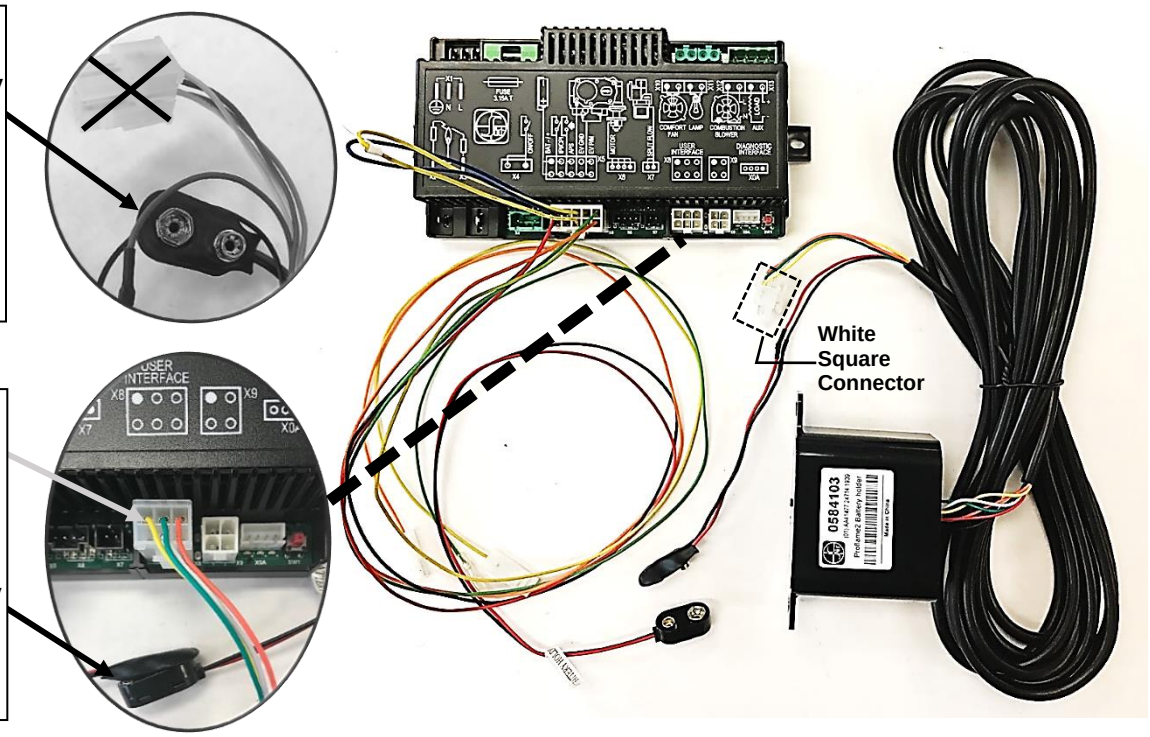

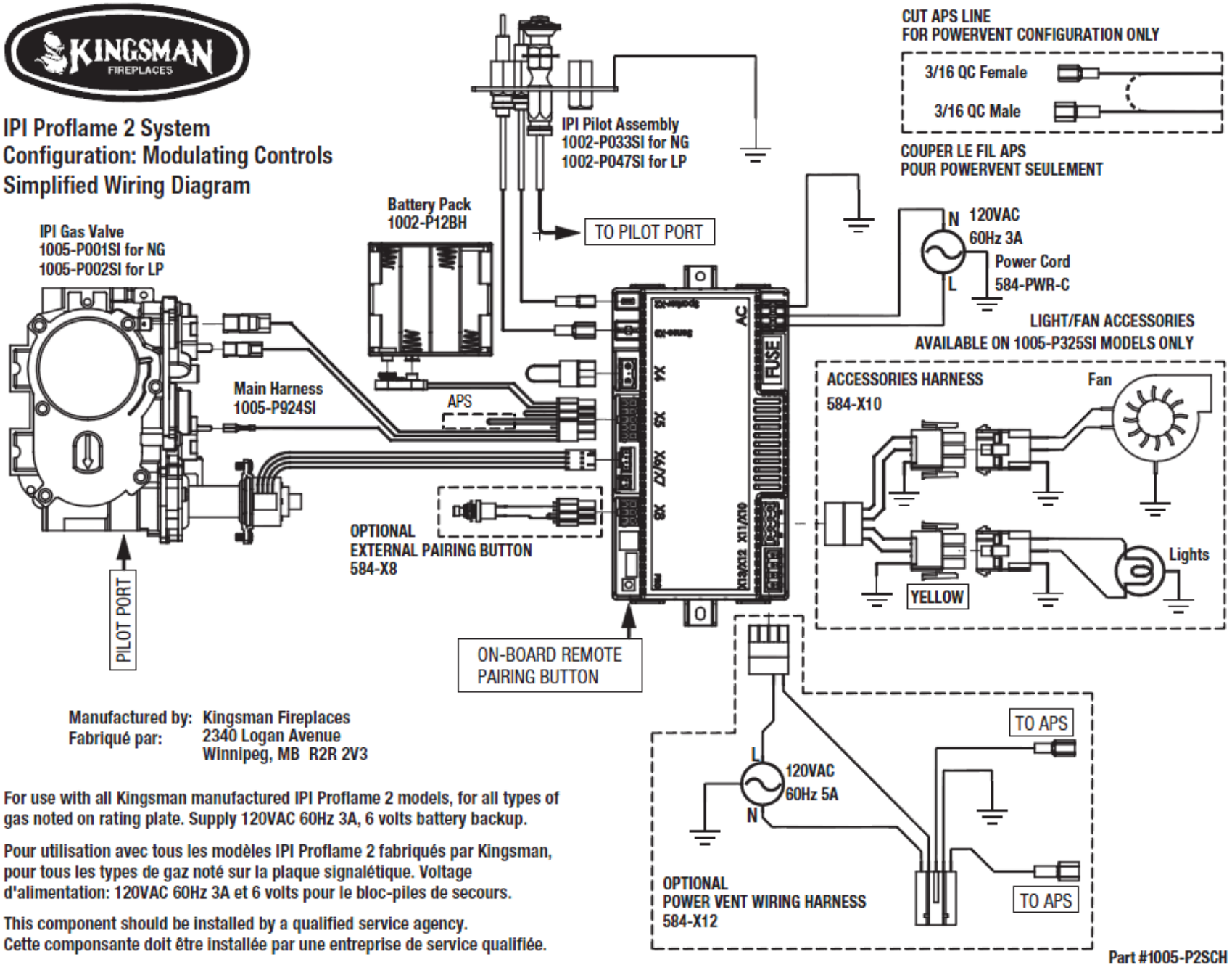

Manufactured by: Kingsman Fireplaces
Fabriqué par: 2340 Logan Avenue
Winnipeg, MB R2R 2V3

For use with all Kingsman manufactured IPI Proflame 2 models, for all types of gas noted on rating plate. Supply 120VAC 60Hz 3A, 6 volts battery backup.

Pour utilisation avec tous les modèles IPI Proflame 2 fabriqués par Kingsman, pour tous les types de gaz noté sur la plaque signalétique. Voltage d'alimentation: 120VAC 60Hz 3A et 6 volts pour le bloc-piles de secours.

This component should be installed by a qualified service agency.
Cette componsante doit être installée par une entreprise de service qualifiée.

ZCV34 Vent Terminal Clearances

NOTE: A HORIZONTAL VENT CERTIFIED GUARD (SAFETY CAGE) IS AVAILABLE WHEN REQUIRED BY LOCAL CODES.

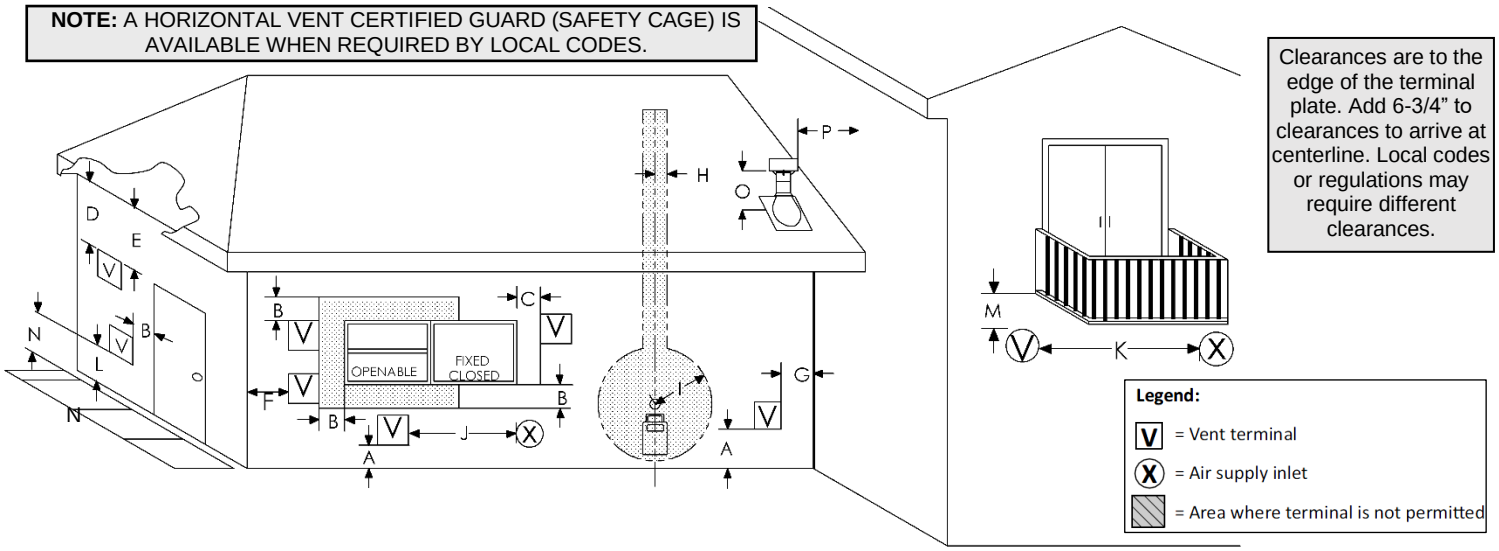

Clearances are to the edge of the terminal plate. Add 6-3/4" to clearances to arrive at centerline. Local codes or regulations may require different clearances.

		Canadian installations[1]	US installations[2]
A	Clearance above grade, veranda, porch, deck, or balcony	12 in (30 cm)	12 in (30 cm)
B	Clearance to window or door that may be opened	6 in (15 cm) for appliances ≤ 10,000 Btu/h (3 kW), 12 in (30 cm) for appliances > 10,000 Btu/h (3 kW) and ≤ 100,000 Btu/h (30 kW), 36 in (91 cm) for appliances > 100,000 Btu/h (30 kW)	6 in (15 cm) for appliances ≤ 10,000 Btu/h (3 kW), 9 in (23 cm) for appliances > 10,000 Btu/h (3 kW) and ≤ 50,000 Btu/h (15 kW), 12 in (30 cm) for appliances > 50,000 Btu/h (15 kW)
C	Clearance to permanently closed window	12 inches (30cm) recommended to prevent condensation on window	12 inches (30cm). 9 inches (23cm) for appliances 50,000 Btu's and lower
D	Vertical clearance to ventilated soffit located above the terminal within a horizontal distance of 2 feet (61 cm) from the center line of the terminal	18 inches (46cm)	18 inches (46cm)
E	Clearance to unventilated soffit	18 inches (46cm)	18 inches (46cm)
F	Clearance to outside corner	3" *	3" *
G	Clearance to inside corner	5" (13cm) *	5" (13cm) *
H	Clearance to each side of center line extended above meter/regulator assembly	3 ft (91 cm) within a height 15 ft (4.5 m) above the meter/regulator assembly	3 ft (91 cm) within a height 15 ft (4.5 m) above the meter/regulator assembly
I	Clearance to service regulator vent outlet	3 ft (91 cm)	3 ft (91 cm)*
J	Clearance to non-mechanical air supply inlet to building or the combustion air inlet to any other appliance	6 in (15 cm) for appliances ≤ 10,000 Btu/h (3 kW), 12 in (30 cm) for appliances > 10,000 Btu/h (3 kW) and ≤ 100,000 Btu/h (30 kW), 36 in (91 cm) for appliances > 100,000 Btu/h (30 kW)	6 in (15 cm) for appliances ≤ 10,000 Btu/h (3 kW), 9 in (23 cm) for appliances > 10,000 Btu/h (3 kW) and ≤ 50,000 Btu/h (15 kW), 12 in (30 cm) for appliances > 50,000 Btu/h (15 kW)
K	Clearance to a mechanical air supply inlet	6 ft (1.83 m)	3 ft (91 cm) above if within 10 ft (3 m) horizontally
L	Clearance above paved sidewalk or paved driveway located on public property	7 ft (2.13 m)	*(Notes: 2)
M	Clearance under veranda, porch deck, or balcony	18 inches (46cm) ‡	18 inches (46cm) *
N	Where a vent termination may cause hazardous frost or ice accumulations on adjacent property surfaces	**(Notes: 1)	*(Notes: 2)
O	Clearance above highest point of exit on roof	18 in (45cm)	18 in (45cm)
P	Clearance to perpendicular or adjacent wall	24 in (60cm)	24 in (60cm)

Notes:

1) In accordance with the current CSA B149.1, Natural Gas and Propane Installation Code.

2) In accordance with the current ANSI Z223.1/NFPA 54, National Fuel Gas Code.

***** Clearance in accordance with local installation codes and the requirements of the gas supplier.

****** A vent shall not terminate directly above a paved sidewalk or paved driveway that is located between two single family dwellings and serves both dwellings. Note: This does not apply to non-condensing appliances (Province of Ontario ONLY).

‡ Permitted only if veranda, porch, deck, or balcony is fully open on a minimum of two sides beneath the floor.

It is imperative that the vent termination be located observing the minimum clearances as shown. There must not be any obstruction such as bushes, garden sheds, fences, decks or utility buildings within 24" from the front of the termination plate.

Do not locate termination where excessive snow or ice build-up may occur. Be sure to check vent termination area after snow falls and clear to prevent accidental blockage of venting system. When using snow blowers, make sure snow is not directed towards vent termination area.

Venting terminal shall not be recessed into a wall or siding. If finishing the outside wall with vinyl or wood siding it is **required** that a Siding Shield be installed, Part Number ZDVSSLR.

General Vent Installation Information

⚠ **WARNING:** DO NOT mix parts from different systems unless stated in the manual.

This gas appliance is approved to be vented either through the side wall or vertically through the roof. Only Kingsman Flex (Z-Flex) Venting Kits and components specifically approved and LABELED for this appliance may be used. This appliance is also approved for use with MG-Duravent Direct Vent system (DirectVent Pro and DirectVent Pro Concentric Flex), BDM Pro Form Direct Vent, Ameri-Vent Direct Vent Pipe System, ICC Excel Direct, Metal Fab Sure-Seal DV and Selkirk Direct Temp.

Rigid or Hard Pipe

When using MG Duravent, Ameri-Vent pipe, BDM Pro Form Direct Vent, ICC Excel Direct, Metal Fab Sure-Seal DV and or Selkirk Direct Temp a Duravent hard pipe adapter must be used (part # ZDVDFA for fireplaces, and part # ZDVDKA for Stoves and Serene Series). Follow installation instructions provided by MG Duravent/Ameri-Vent/Selkirk Direct Temp, ICC Excel Direct, and Metal Fab Sure-Seal DV for installation of pipe and adhere to the clearance to combustibles provided in this manual.

Apply a bead of Mill Pac high temp sealant at the flue of the appliance when using a Duravent adapter.

NOTE: It is critical to the proper and safe operation of this fireplace that on all connections the inner liner and the outer casing are both caulked with liberal amounts of sealant. Do not use any kind of tape or silicone other than that recommended in this manual. Use Mill Pac Sealant.

NOTE: These actions are essential for proper resealing or reinstallation of the vent-air intake system.

REMEMBER THAT A 1/4" VERTICAL RISE IS REQUIRED FOR EVERY 12" OF HORIZONTAL RUN.

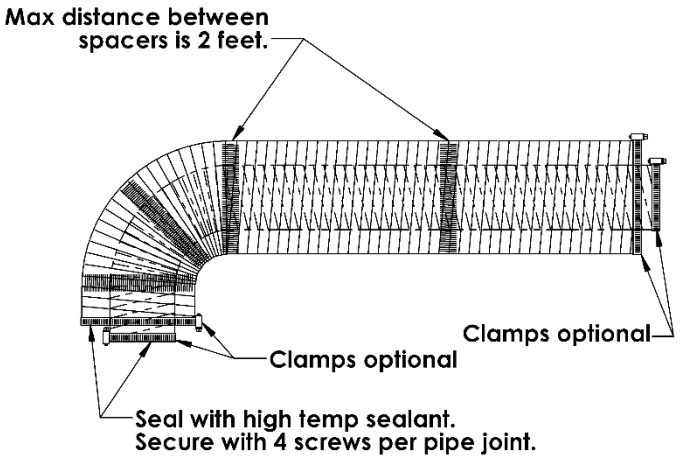

Flex Pipe Venting

Kingsman Flex pipe is shipped in unexpanded length. When installing pipe expand the lengths. Pipe can be expanded to twice their lengths e.g., 4ft. to 8ft. Fully expand pipe and cut off excess. Do not use more than 2 couplers to extend short pipes. Single sections are preferred in an installation attaching at the fireplace and termination.

Place the spring spaces provided approximately every two feet to stabilize 4" flex in the center of 7" flex. When forming bends place spring in bend or before and after. (See Fig. 1). Horizontal runs require support metal straps every 2 feet. In offset installation support straps should be used to stabilize pipe.

Expand 4" and 7" flex pipe to the point that the 7" protrudes approximately 2 to 3 inches past outer wall and the 4" flex protrudes approximately 2 to 3 inches past the 7" flex. (See Fig. 1). Attach the 4" pipe to the termination first and secure with sealant and screws then attach the 7" flex to the termination with caulking and screws. Termination may then be moved back to the outer wall and attached to home screwing into the framing. Silicone around termination to waterproof. If siding shield is going to be used attach this using same attaching hole as the top of termination after termination has been caulked for water proofing.

Use Hi Temp Sealant

Apply a bead of Mill Pac high temp sealant to all joints and use four screws to secure each pipe at fireplace, termination and any joint if joining any sections of pipe.

Preventing Moisture Problems

Insulate wall thimbles and attic insulation shields for vertical attic terminations with non-combustible mineral wool Insulation (Roxul, Rockwool, Thermafiber UltraBatt, etc.). Attach and seal the outer perimeter of the wall thimble or attic insulation shield to the existing vapor barrier.

FDVHT Termination

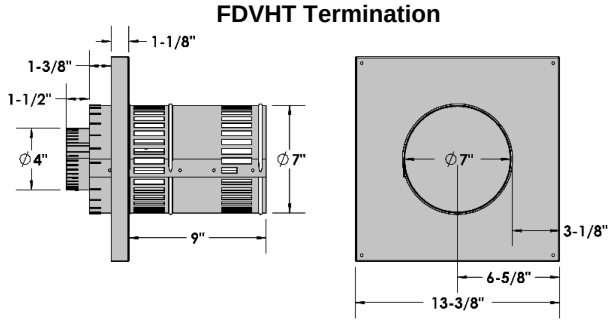

FDVHSQ Termination

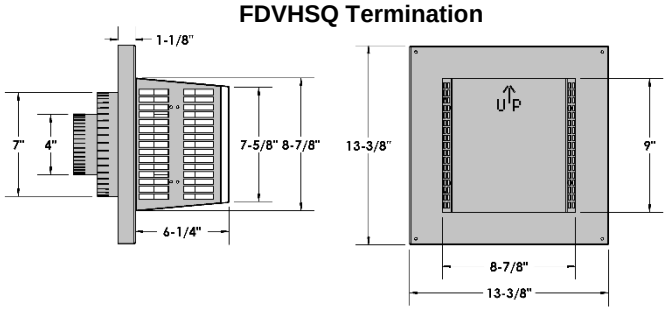

1. To determine the minimum distance from the bottom of fireplace to center of vent see the Framing Your Gas Fireplace section. Cut a hole through the wall allowing for an 11” x 11” (inside diameter) in combustible walls for wall thimble or an 8” diameter hole in a non-combustible wall (See Figure 2).
2. For the clearance to combustible above a 90-degree bend see Clearance to Combustibles section.
3. Select the approximate vent length, precise measurements are not needed as your flex pipe can be expanded to twice its shipped length for ease of installation.
4. To install wall thimble center over 11” x 11” (inch) framing from both sides of wall and secure. Route flex vent pipe through wall thimble (See Figure 1).

Z58WTS Wall Thimble Shield - Must be used for Non-Vented enclosures with horizontal venting where the top of the enclosure is less than 12 inches from the top of the vent.

ZDVWT Wall Thimble

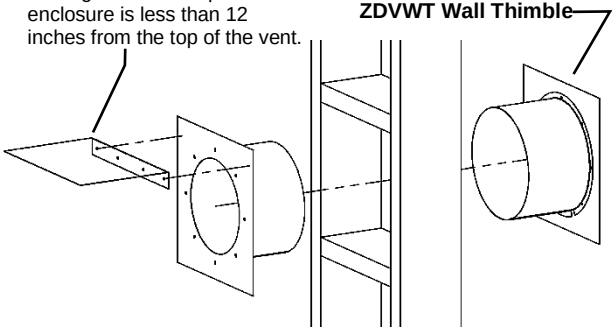

5. Before joining pipes, apply a bead of high temperature sealant (Mill Pac) to end of pipe. First attach the four-inch (4”) flue pipe to the vent termination with sealant, and secure with the four screws provided. At this time make sure the spacer springs are attached to the (4”) flex pipe as required. Then attach the seven-inch (7”) pipe by the same method.
6. Mount vent termination and seal to wall using caulking around the wall thimble to weather proof. After installing the vent termination, double check to make sure the pipe extends properly through wall thimble and into vent termination.
7. Before joining pipes to fireplace flue, apply a bead of high temperature sealant (Mill Pac) to end of pipe. First attach the four-inch (4”) flue pipe to fireplace with sealant, and secure with the four screws provided. At this time verify that the spacer springs are attached properly to the (4”) flex pipe as required. Then attach the seven-inch (7”) pipe by the same method.
8. Support horizontal pipes every two (2) feet (61 cm) with metal strap bands. Re-check fireplace to make sure it is levelled and properly positioned and secured.
9. Support vertical pipes to maintain a minimum of 1” or greater clearance to combustibles with metal strapping bands.
10. If finishing the outside wall with vinyl or wood siding it is **<u>required</u>** that a Siding Shield be installed, Part Number ZDVSSLR.

Note: Vent Termination must not be recessed into wall or siding.

WARNING: A HORIZONTAL VENT CERTIFIED GUARD (SAFETY CAGE) IS AVAILABLE WHEN REQUIRED BY LOCAL CODES.

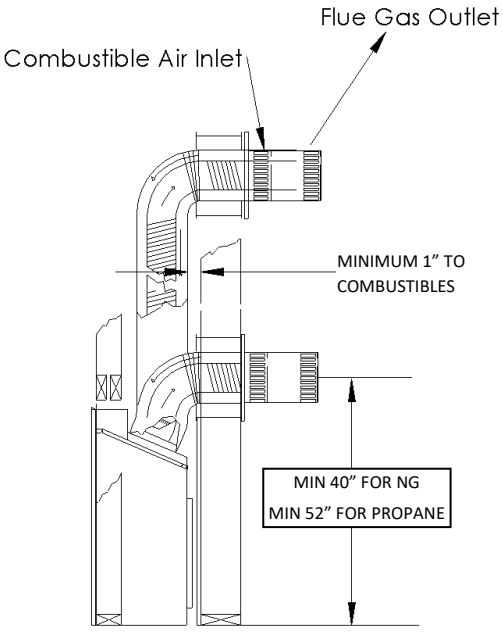

Figure 1

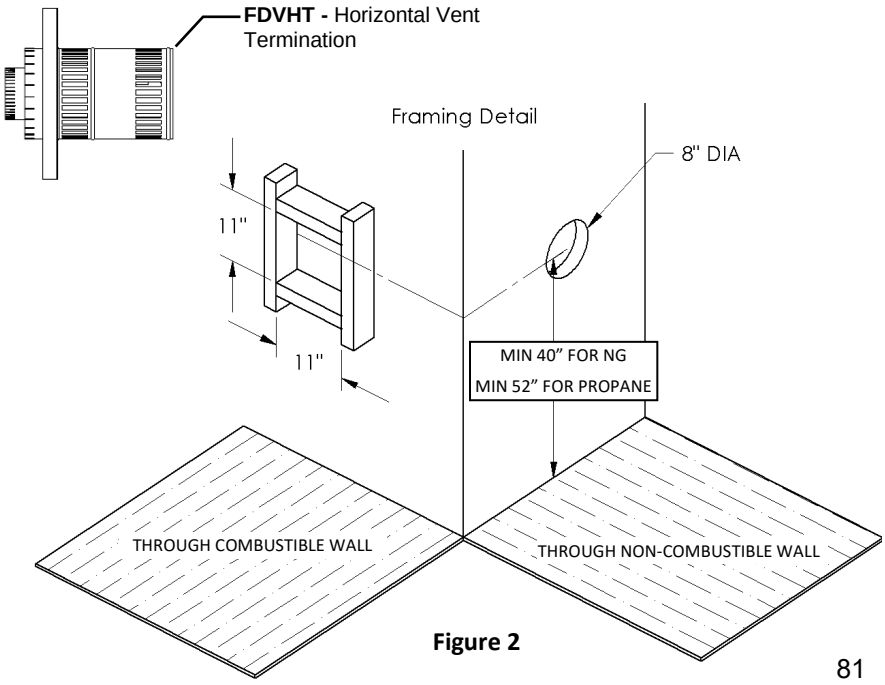

Figure 2

Since it is very important that the vent system maintain its balance between the combustion air intake and the flue gas exhaust, certain limitations as to vent configurations apply and must be strictly adhered to.
The table showing the relationship between vertical and horizontal side wall venting will help to determine the various vent lengths.
The maximum horizontal run is 20 ft/6.1 m when the vertical run is 7 ft/2.1m (Figure C). Note: 1/4" vertical rise is required for every 12" of horizontal run.
The maximum number of 45 degree bends per side wall installation is two (2) in the horizontal run and then you must reduce the length of the horizontal by 18 inches for each 45 degree bend.

How to Use the Horizontal Vent Table

1. Determine the height of the system and the number of bends required.
2. Having determined the vertical distance, determine the maximum horizontal section allowed.
3. Vent table has been established for 90˚ horizontal/vertical runs. Flex pipe runs not having 90˚ bends will not fall into vent table standards.

Horizontal Venting Table from Bottom of Fireplace

For venting to a maximum of 43ft (13.1 meters).

Total Vertical		Max Total Horizontal	
Feet	**Meters**	**Feet**	**Meters**
NG: 40" Min	1.02	4	1.2
Propane: 52" Min	1.32	4	1.2
6	1.8	16	4.9
7	2.1	20	6.1
8	2.4	20	6.1
9	1.8	20	6.1
10	3.0	20	6.1
11	3.4	20	6.1
12	3.7	20	6.1
13	4.0	20	6.1
14	4.3	20	6.1
15	4.6	20	6.1
20	6.1	20	6.1
25	7.6	15	4.6
30	9.1	10	3
43 (Max)	13.1	0	0

IMPORTANT: Always locate the fireplace in such a way that a minimum of offsets and/or horizontal runs are required. A Minimum 1/4" vertical rise is required for every 12" horizontal run.

IMPORTANT: Minimum clearance between vent pipes and combustible materials is 1 inch (25mm).

NOTE: The final location of the fireplace must be such that the horizontal vent dimensions fall with- in those stated on the graph. The Maximum Vertical vent run is 43ft. (13.1 meters).

The maximum vertical run is 43 ft/13.1 meters.
Special Note: For each 45 degree bend installed in the horizontal run, the length of the horizontal run must be reduced by 18" (45cm). This does not apply if the 45 degree bends are installed on the vertical part of the vent system.
Example: If according to the table, the length of the horizontal run is 10 feet, and two 45 degree bends are required, the horizontal run length must be reduced to 7 feet.
2 additional 90° bends or equals are allowed. The horizontal run must be reduced by 36" per each 90° bend, or 18" per each 45° bend.

Example A:
If the vertical dimension from the floor of the fireplace is 6ft, the horizontal run to the wall flange of the vent termination must not exceed 16ft.

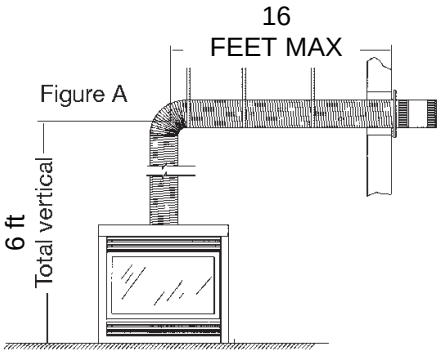

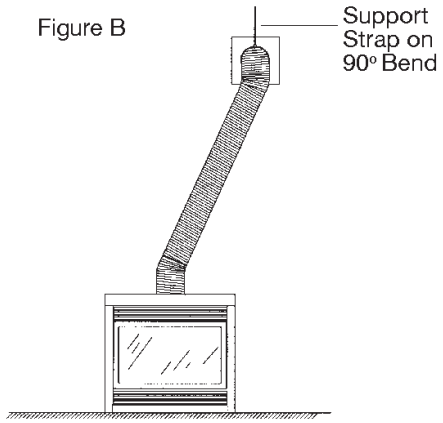

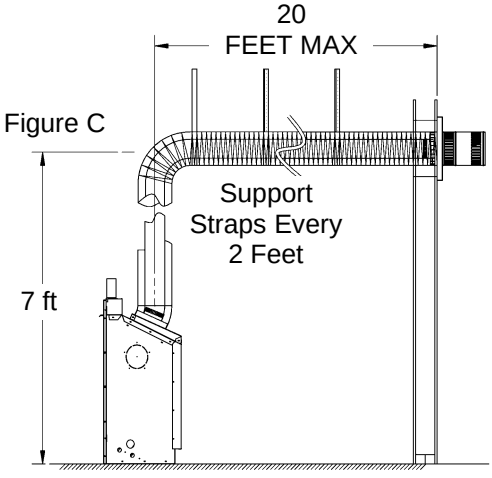

ZCV34 Flue Restrictors

Flue Restrictors are supplied with the appliance. For longer vertically vented installations and power vent installations it is necessary to use the Flue Restrictors. The flue is fully open from the factory for short horizontal and vertical runs.

Non-Baffled units ZCV34N, ZCV34NE, ZCV34NE2, ZCV34LP, ZCV34LPE, ZCV34LPE2 have [2] Flue Restrictors:

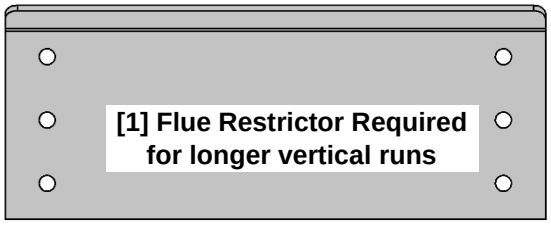

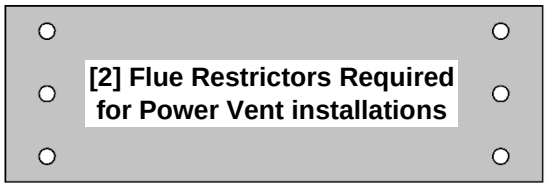

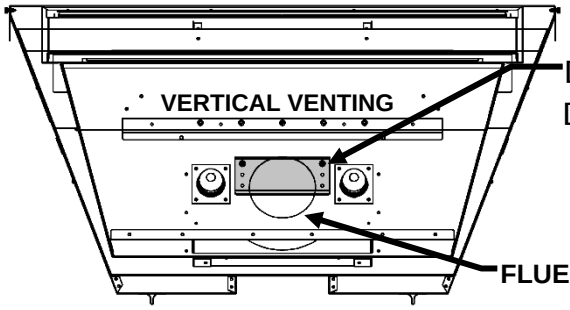

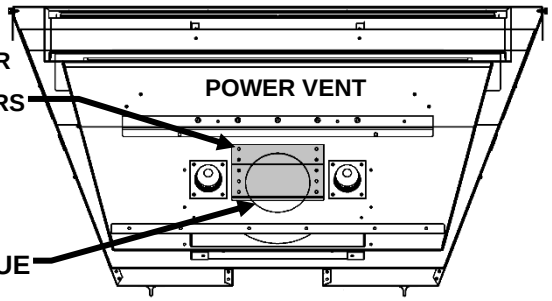

ZCV34NH, ZCV34NHE, ZCV34NHE2, ZCV34LPH, ZCV34LPHE, ZCVLPHE2 have [3] Flue Restrictors:



VERTICAL VENTING

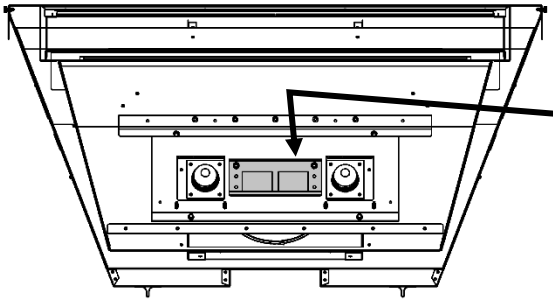

POWER VENTING:

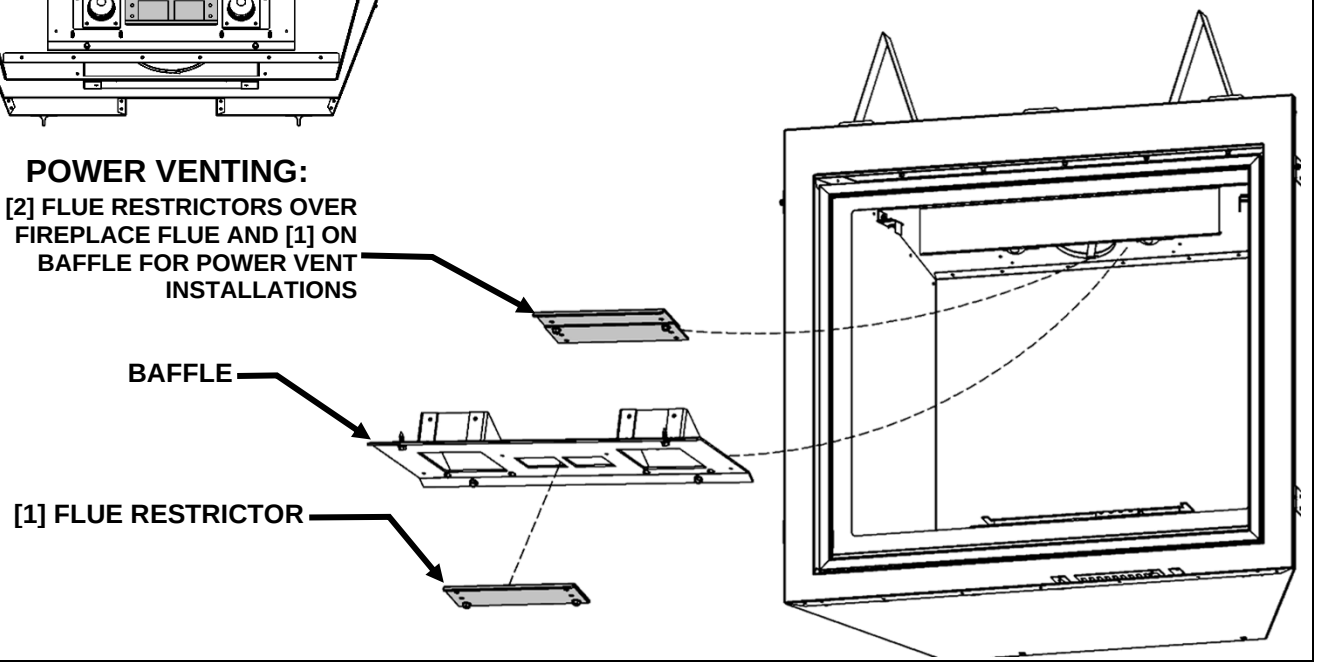

Z47ST24 / Z47ST36 Horizontal Snorkel Terminations

Two snorkel terminations are available if a vertical rise is necessary on the exterior side of a building:

Z47ST24 (24” Tall, 14-1/2” Center to Center) **Z47ST36** (36” Tall, 26-1/2” Center to Center)

Follow standard horizontal venting installation procedures. If the Snorkel Termination is to be located below grade, a window well is recommended with adequate and proper drainage as per local codes. Leave 2” clearance below snorkel to prevent water from entering the Snorkel Termination. Do not enclose the Snorkel within a wall or other type of enclosure and **do not back fill**. Ensure that grade level slopes away from the building. Follow all local codes.

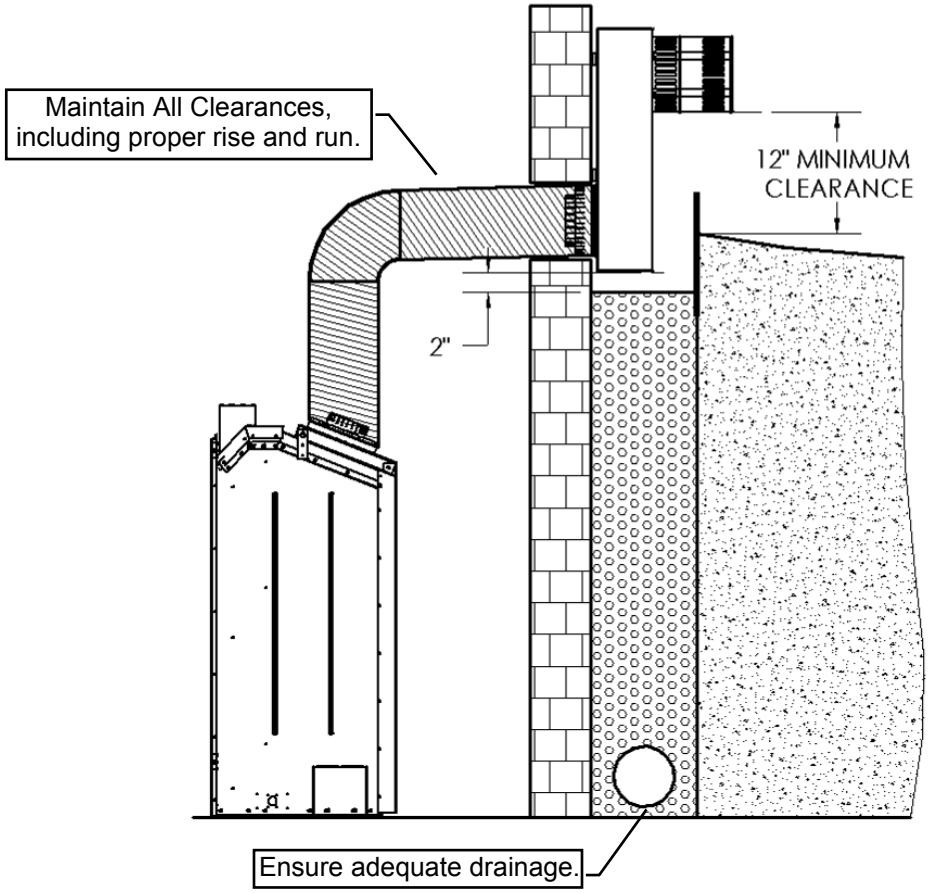

-FOLLOW ALL LOCAL CODES-

- A safety cage (Z57STSC) is also available.

Place safety cage over snorkel and mount with [4] DT screws (supplied with safety cage).

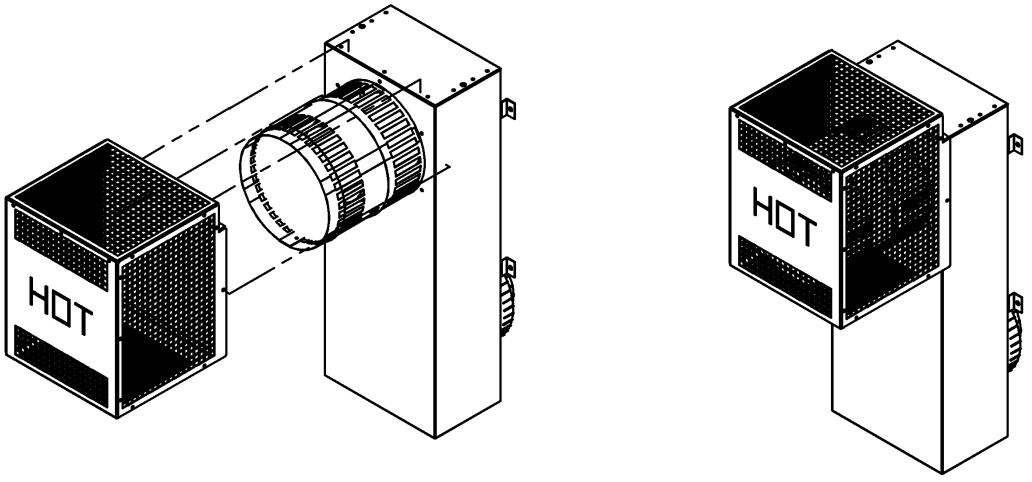

Venting Straight Up Through Roof

An Attic Insulation Shield must be installed where the vent passes from a lower living space into an attic space where the chimney is not enclosed. It is designed to keep insulation materials away from the chimney.
When installing the Attic Insulation Shield where the chimney passes from a living space to an attic space, install the shield from below and nail in place using 1" spiral nails.
A fire stop must be installed on the bottom side of the joists when passing through a ceiling or floor. If an attic insulation shield is to be used, a fire stop is not required.

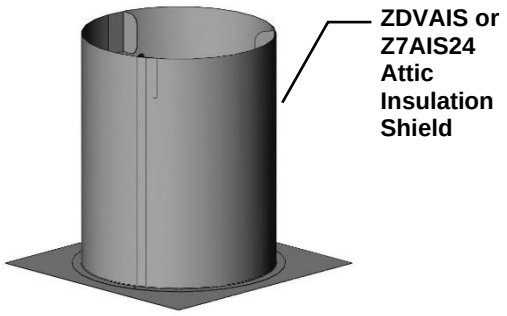

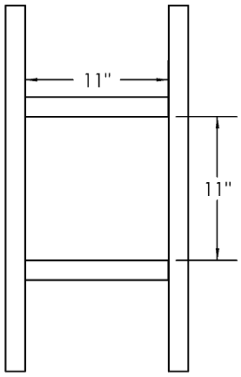

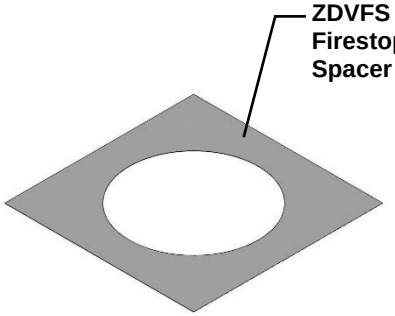

Using Flex Bends

Avoid cutting joists by offsetting the flex pipe.
When using 45° bends a bend support is required directly above the highest bend.
When installing a bend in a joist area a minimum of 4" clearance to combustible to the top of bend must be maintained, sides and bottom of pipe, a 1" clearance to combustibles must be maintained. If running horizontal through an area a 1-1/2" minimum clearance to the top of the horizontal pipe must be maintained.
Maximum vertical height of system should not exceed 43 feet.
Use roof support and rigid pipe at roof level. Flex pipe is not permitted within roof support.
When penetrating the roof a rigid galvanized pipe must be used. Attach flex pipe to the rigid pipe with high temperature sealant, secure with four screws assuring the flex pipe and rigid pipe are secured. Attach rigid pipe to termination with sealant and screw with 4 sheet metal screws. The Inner flex pipe must be secured with 4 screws which must penetrate both the flex pipe and inner section of termination. Attach 7” rigid pipe to 7” termination with sealant and screw with 4 sheet metal screws.
Vertical termination clearance is 18" [45.7cm] above the roof, measured from highest point of exit on the roof line.
Support vertical pipes to maintain minimum of one inch or greater clearances to combustibles.

Roof Flashing

Ensure that you have the proper roof flashing by checking your roof pitch using a level and two rulers, or by using a roof pitch card. Slide a Roof Flashing suitable to your roof slope over the vent. Place the edge of the flashing plate that will be on the higher part of the roof slope under the shingles. Both the sides and the lower edge lay on top of the shingles.

NOTE: At the top edge of the flashing plate, lift the shingles and nail the plate to the roof deck, then cement the shingles to the plate with a suitable waterproof mastic.

Ensure that the chimney is plumb. Square up the flashing plate and nail in place to the roof deck. Use 12 nails with neoprene washers or cover the heads with a suitable waterproof mastic. Wrap the storm collar around the vent above the flashing. Secure the ends together loosely with nut and bolt supplied. Slide the collar down the vent until it comes in contact with the flashing. Tighten the bolt and seal the Storm Collar to the vent with a suitable waterproof non-combustible mastic.
The flashing and storm collar should be painted to match the roof shingles. This will extend its life and improve the appearance. Clean, prime and paint with suitable painting products.

Vertical Venting in Cold Climates

In cold climate conditions where temperatures go below -10 degrees Celsius or 14 degrees Fahrenheit, we recommend that the chase be insulated and where the vent pipe enters into the attic space that the pipe be wrapped with an insulated Mylar sleeve. This will increase the temperature of the vent and help the appliance to vent properly in cold weather conditions.
It is also important in vertical vented direct vent appliances that the appliance be operated daily during the winter months as this will help stop the termination from freezing up.

We recommend using a thermostat set at room temperature to allow the unit to cycle.
For IPI models it may be necessary to set the appliance to Standing Pilot mode to maintain heat in the cavity. The purpose of this procedure is to prevent cold air from penetrating the chimney and then onto the living space. Therefore, when the internal temperature is slightly elevated the fireplace is able to freely exhaust its combustion and hence making it easier to start up.

-ALSO SEE DIAGRAMS ON FOLLOWING PAGES-

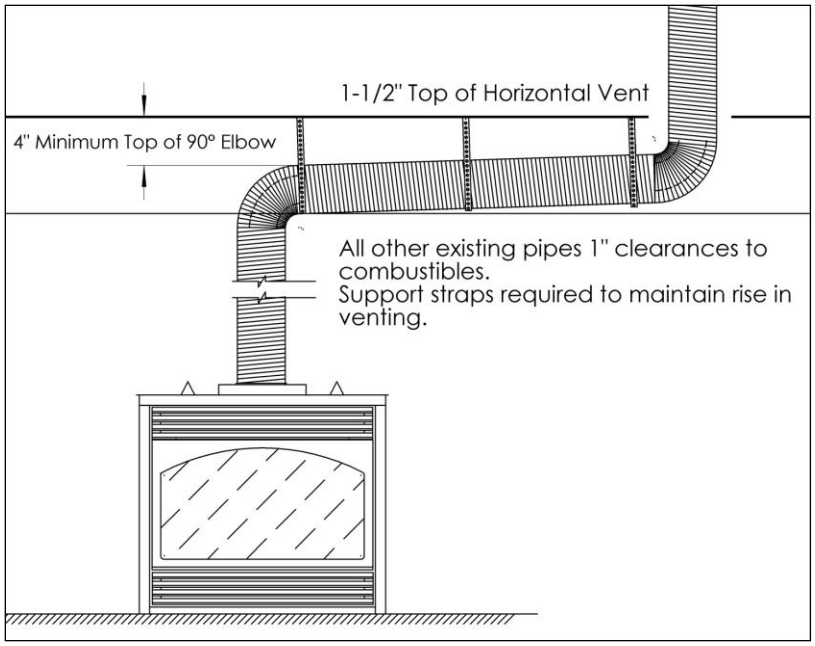

Clearances in horizontal venting.

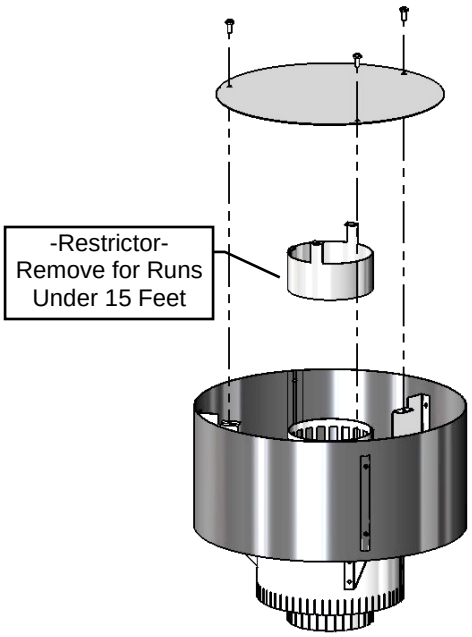

FDVVT40

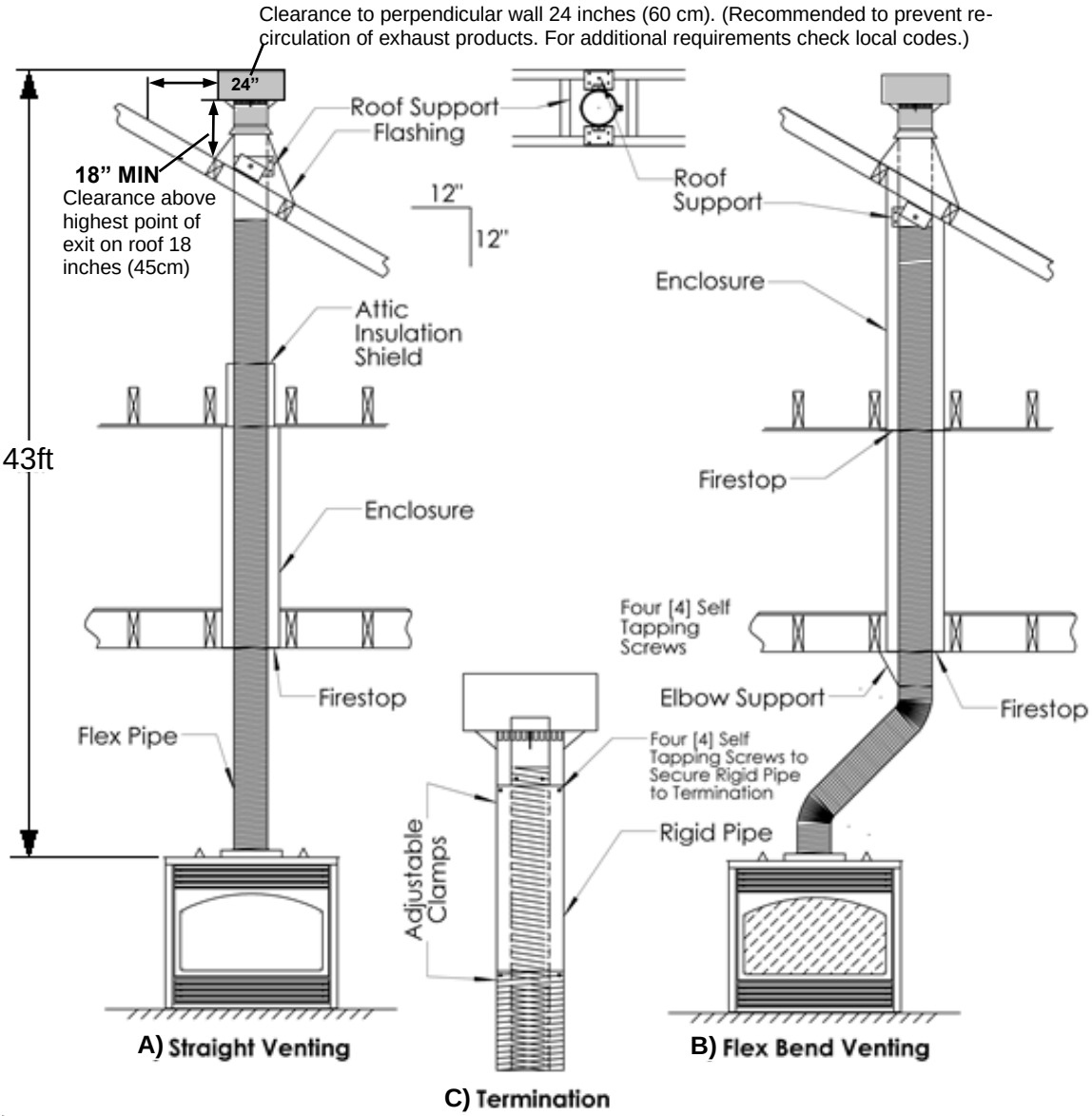

A) Straight-through roof support configuration; **B)** Flex bend configuration; **C)** Termination mounting

ZCV34 Venting - Cathedral Ceiling

Just as with a normal ceiling, an **Attic Insulation Shield** must be installed where the fireplace vent passes from a lower living space into an attic space when installing a fireplace into a room with a cathedral ceiling. This will keep insulation and other combustibles away from the vent pipe. A ***Support Box*** must be built in order to install the Attic Insulation Shield correctly.

A **Fire Stop** must be installed on the bottom side of joists when passing through an uninsulated ceiling or floor.

WARNING: HEAT CANNOT BE DISCHARGED INTO THE WALLS, FLOOR, OR CEILING. Heat must exit through the required 2" opening at the top of the chase. **Use Hi Temp Sealant.**

Insulate Attic Insulation Shield with non-combustible mineral wool insulation, and attach and seal outer perimeter to the existing vapor barrier.

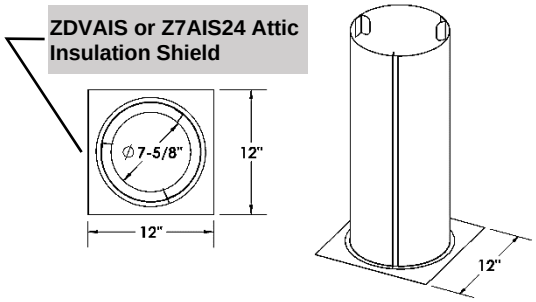

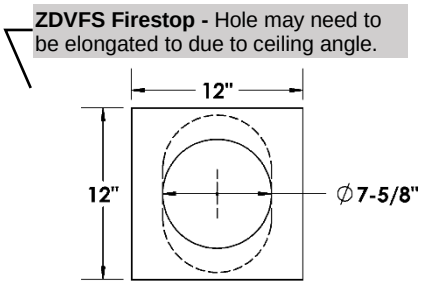

Option 1 - Angled Chase Opening

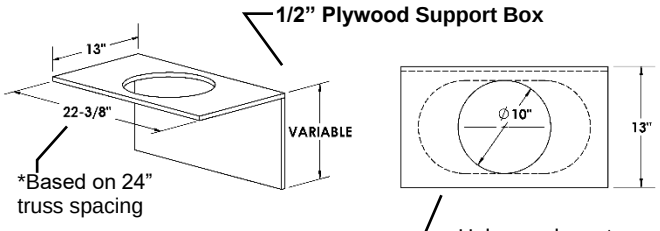

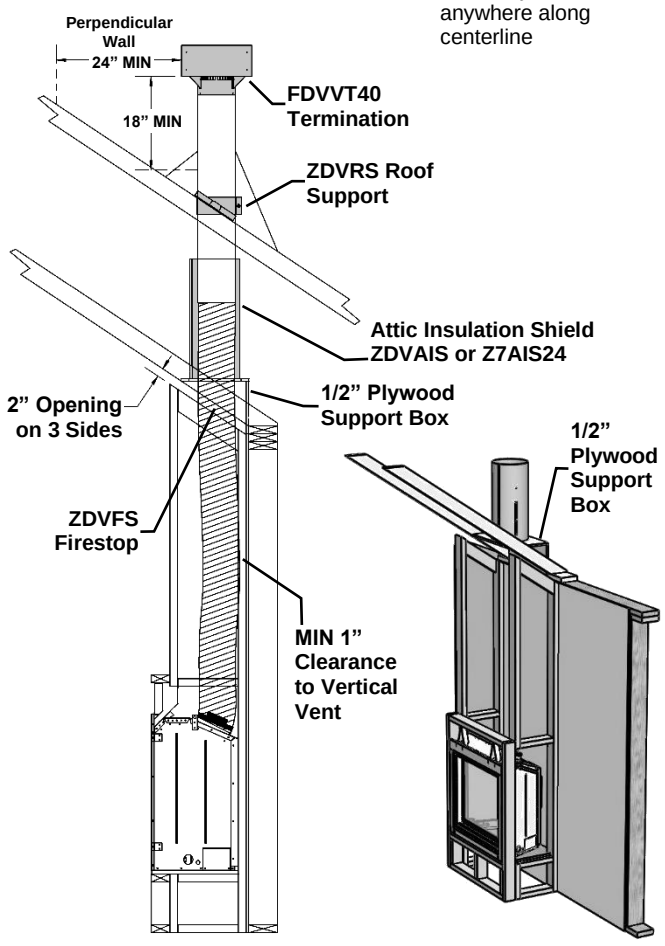

Option 2 - Horizontal Chase Opening

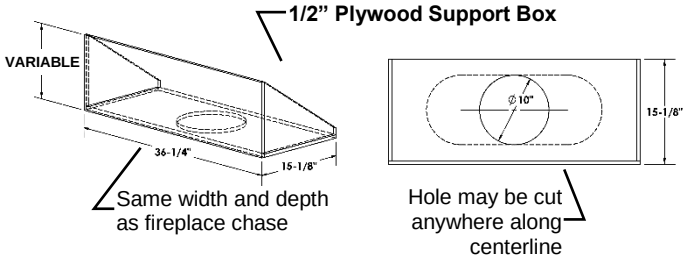

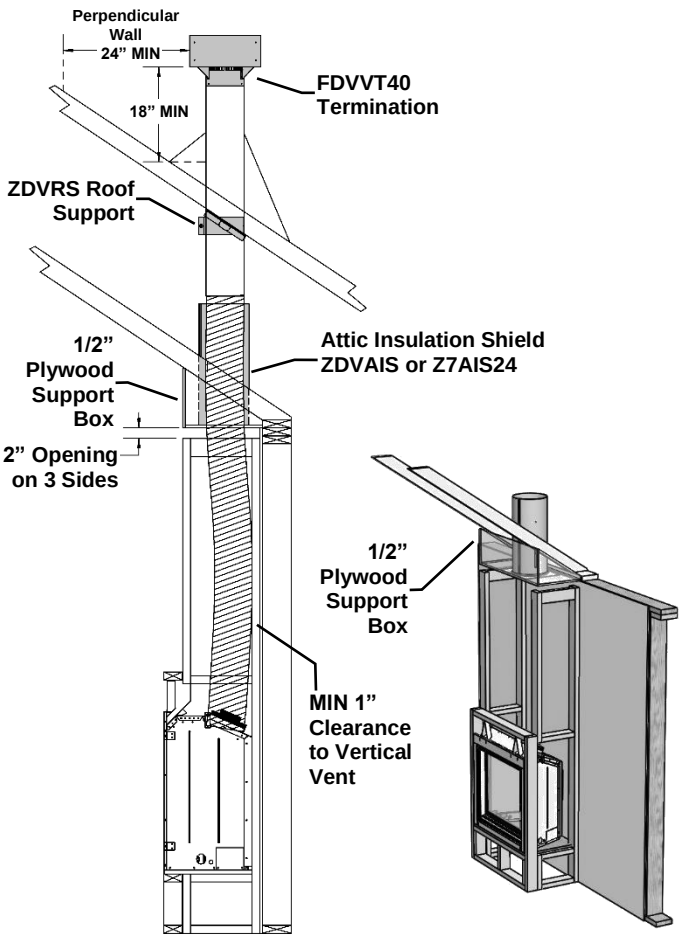

Fireplace Installations Using Co Linear Flex Kits for Non-Baffled Units: ZCV34N, ZCV34NE, ZCV34NE2, ZCV34LP, ZCV34LPE, ZCV34LPE2

⚠ WARNING CO-AXIAL TO CO-LINEAR VENTING CONFIGURATIONS MUST ONLY BE USED IN A NON-COMBUSTIBLE CHIMNEY OR ENCLOSURE. INSTALLATION IN A COMBUSTIBLE ENCLOSURE COULD RESULT IN A FIRE. MINIMUM VENT HEIGHT IS 12 FEET. MAXIMUM VENT HEIGHT IS 43 FEET.

Hard Pipe Adapter	Co Axial to Co Linear Appliance Connector Options	Size of Flex- 3x3 (Min 12ft / Max 43ft)	Termination Options
ZDVDFA	46DVA-CLAA 46DVA-GCL	IDVFK25 (25ft Kit) ZDV3FC (Flex Connectors)	IDVVT36 (Kingsman)- Requires IDVFK25 (25ft Flex Kit) 46DVA-CL33 High-Wind Termination (c/w35ft of Flex)



46DVA-CL33 HIGH WIND TERMINATION

BASEPLATE

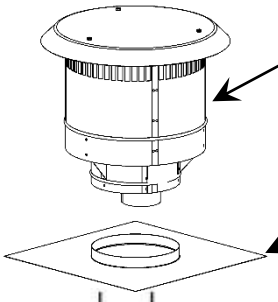

IDVVT36 KINGSMAN TERMINATION & BASEPLATE

BASEPLATE

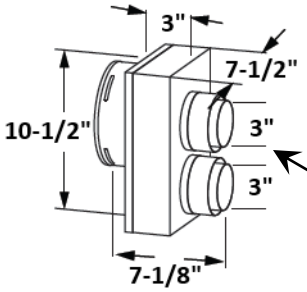

3x3 FLEX LINER

CO-AXIAL TO CO-LINEAR APPLIANCE CONNECTOR **46DVA-GCL**

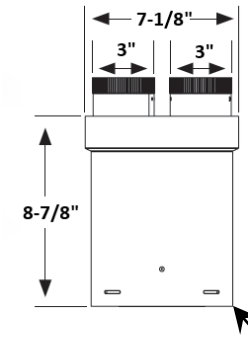

CO-AXIAL TO CO-LINEAR APPLIANCE CONNECTOR **46DVA-CLAA**

HARD PIPE ADAPTER **ZDVDFA**

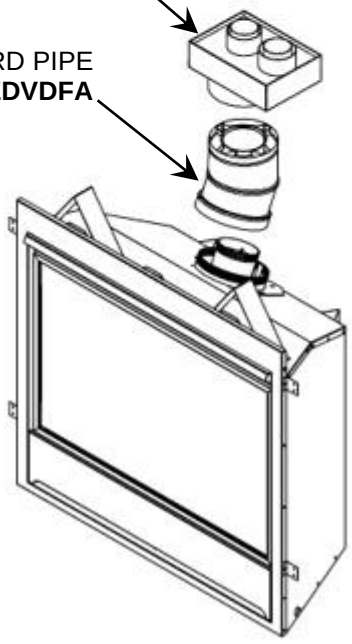

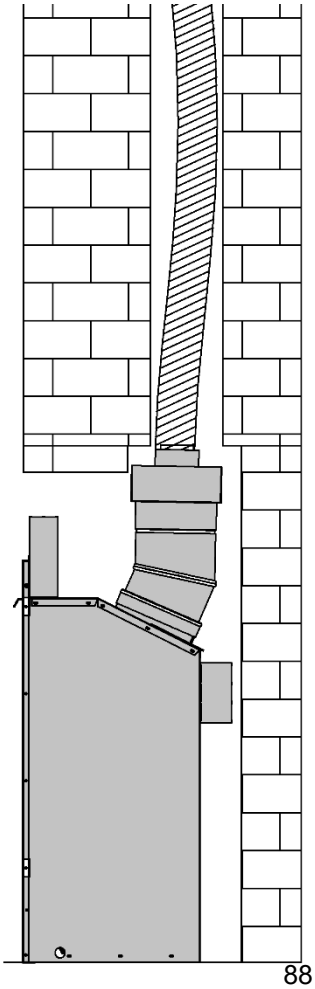

Fireplace Installations Using Co Linear Flex Kits for Baffled Units: ZCV34NH, ZCV34NHE, ZCV34NHE2, ZCV34LPH, ZCV34LPHE, ZCV34LPHE2

⚠ WARNING CO-AXIAL TO CO-LINEAR VENTING CONFIGURATIONS MUST ONLY BE USED IN A NON-COMBUSTIBLE CHIMNEY OR ENCLOSURE. INSTALLATION IN A COMBUSTIBLE ENCLOSURE COULD RESULT IN A FIRE. MINIMUM VENT HEIGHT IS 12 FEET. MAXIMUM VENT HEIGHT IS 43 FEET.

Hard Pipe Adapter	Co Axial to Co Linear Appliance Connector Options	Size of Flex- 4x3 (Min 12ft / Max 43ft)	Termination Options
ZDVDFA	46DVA-34CLAA 46DVA-GCL34	I43FK25 (25ft Kit) ZDV3FC (Flex Connectors) ZDV4FC (Flex Connectors)	IDVVT43 (Kingsman)- Requires I43FK25 (25ft Flex Kit) 46DVA-CL33H High-Wind Termination (c/w35ft of Flex)



46DVA-CL33H HIGH WIND TERMINATION

BASEPLATE

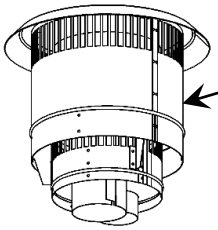

IDVVT43 KINGSMAN TERMINATION & BASEPLATE

BASEPLATE

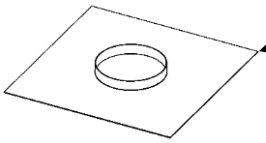

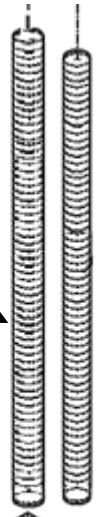

4X3 FLEX LINER

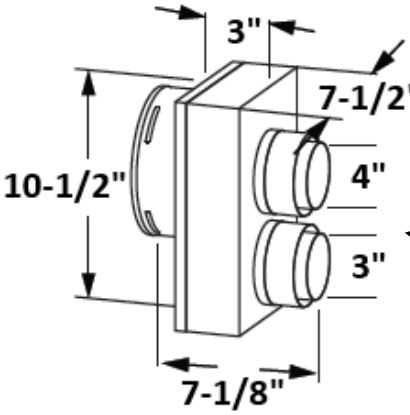

CO-AXIAL TO CO-LINEAR APPLIANCE CONNECTOR **4DVA-GCL34**

HARD PIPE ADAPTER **ZDVDFA**

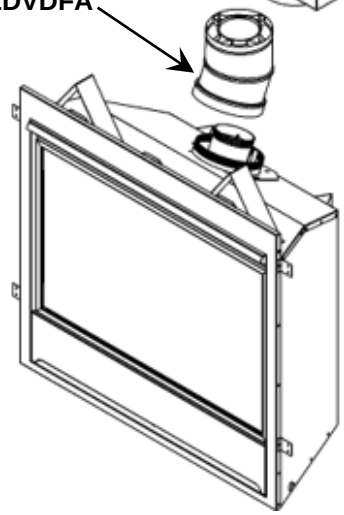

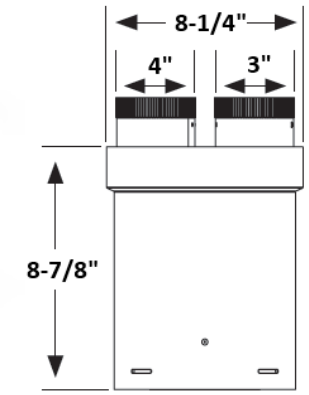

CO-AXIAL TO CO-LINEAR APPLIANCE CONNECTOR **46DVA-34CLAA**

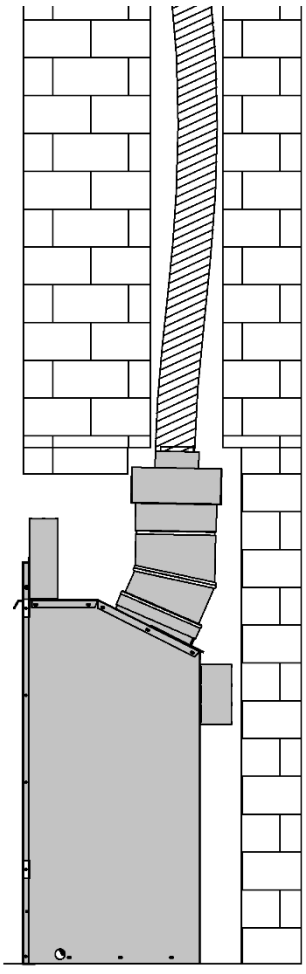

Approved for Power Vent PVH58 / PVH58FM

- This appliance is approved for use with Kingsman Horizontal Power Vents -

A Horizontal Power Vent Termination is intended for use where standard venting configurations are not possible. **Refer to Power Vent Manual for proper installation and use.**

- **NOTE:** MODELS EQUIPPPED WITH MILLIVOLT/ STANDING PILOT IGNITION: Downward vertical vent runs are **NOT** permitted.
- **NOTE:** MODELS EQUIPPPED WITH INTERMITTENT PILOT IGNITION (Proflame 1 or Proflame 2): Downward vertical vent runs are permitted, however, Cold Climate Switch (Standing Pilot Mode) must **NOT** be used.

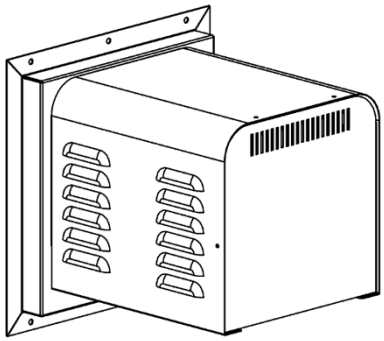

PVH58

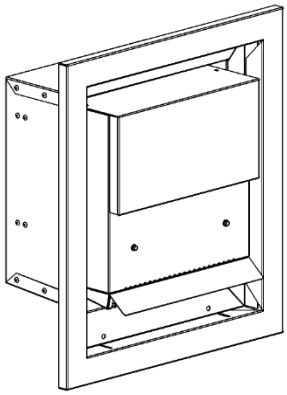

PVH58FM

ZCV34 - Maximum & Minimum Vent Lengths using Power Vents:

3" / 5" Rigid:
MIN: 20' Equivalent Length, 5 Elbows max
MAX: 125' Equivalent Length, 5 Elbows max

4" / 7" Flex:
MIN: 12' Equivalent Length, 5 Elbows max
MAX: 125' Equivalent Length, 5 Elbows max

4" / 6-5/8" Rigid:
MIN: 13' Equivalent Length, 5 Elbows max
MAX: 125' Equivalent Length, 5 Elbows max

Units Can be Reduced to 3 x 5" or 4 x 6-5/8" Venting
(A 12 Inch Length of 5/8 M&G Duravent Pipe Must be Connected to Fireplace Flue First.)

3 x 5" Venting:

-**PVA5835**- Pipe Reducer for Fireplace

-**PVA3558**- Pipe Increaser for Termination

4 x 6-5/8" Venting:

-**ZDVDRA**- Pipe Reducer for Fireplace

-**ZDVDIA**- Pipe Increaser for Termination





At Fireplace Flue:

PVA5835 for 3 x 5" Venting

ZDVDRA for 4 x 6-5/8" Venting



For Power Vent Termination:

PVA3558 for 3 x 5" Venting

ZDVDIA for 4 x 6-5/8" Venting

PVH58 Power Vent Parts List for 4/7 Venting

POWER VENT PARTS LIST – 4/7 VENTING

NUMBER	DESCRIPTION
PVH58	Horizontal Power Vent Starter Kit - Exterior Mount
PVH58FM	Horizontal Power Vent Kit - Flush Mount

Note: Must use a one-foot section of 5/8 DV hard pipe to connect to the Power Vent Termination (not supplied)

CHOOSE CONTROL MODULE OR HARNESS DEPENDENT ON VALVE SYSTEM

PVC58MV	Power Vent Control Module - for Millivolt Models
PVC58IPI	Power Vent Control Module - for Proflame 1 - IPI Models
584-X12	Harness for Proflame 2 IPI - Deluxe Models
PVH20H	Main Wiring Harness Assembly – Extension Harness (20ft)

CHOOSE VENTING TO BE USED: SECTION 1 - HARD PIPE, SECTION 2 FLEX VENT

SECTION 1 DIRECT VENT HARD PIPE 4x6-5/8" – for entire installation

(Two Adapters needed: one at Flue and one at Termination)

	Flue of Fireplace
ZDVDKA	Duravent Adapter – for Flat Flue
ZDVDFA	Duravent Adapter – for Sloped Flue
	Termination End
ZDVDIA	Duravent Hard Pipe Adapter- (used to connect 4x6-/8" to 5/8 Hard Pipe)

Note: Must use a one-foot section of 5/8 DV hard pipe (not supplied) to connect to the Power Vent Termination.

SECTION 2 FLEX VENT - Used for entire installation – order Z47PVA

Note: Must use a one-foot section of 5/8 DV hard pipe connected to the power vent on all installations.

	Termination End
Z47PVA	Flex Pipe Adapter Kit - (to adapt flex pipe to power vent to hard pipe)

Note: Must use a one-foot section of 5/8 DV hard pipe (not supplied) to connect to the Power Vent Termination.

SECTION 3 DIRECT VENT HARD PIPE 3/5" - for entire installation

(Three Adapters needed two at Flue and one at Termination)

Flue of Fireplace - Choose appropriate adapter for 4x6-5/8"

ZDVDFA Duravent Fireplace Adapter 4x6-5/8 - Sloped Flue

ZDVDKA Duravent Stove Adapter 4x6-5/8" - Flat (Serene 47)

Convert from 4x6-5/8" to 3/5" MG HP

PVA4635 Duravent Adapter- 4x6-5/8 TO 3/5 - FLUE

Convert to Termination - 3/5" to 5/8"

PVA3558 Duravent Adapter for Power Vent Termination - 3/5" to 5/8"

Note: Must use a one-foot section of 5/8 DV hard pipe to connect to the Power Vent Termination (not supplied)

FLEX VENTING KITS

ZDVFK5	Flex Kit (4” & 7” Dia.) x 2.5’ (Unexpanded) 5’ Expanded
ZDVFK8	Flex Kit (4" & 7" Dia.) x 8' (c/w Springs, Screws, Mill Pac)
ZDVFK20	Flex Kit (4" & 7" Dia.) x 20' (c/w Springs, Screws, Mill Pac)

POWER VENT ACCESSORIES

ZDV4FC	Flex Connector 4” Diameter
ZDV7FC	Flex Connector 7” Diameter
ZDV4FCL	Flex Clamp 4"
ZDV7FCL	Flex Clamp 7"
ZDV4SS	Spring 4" Standoff Spacer
PVH58WT	Wall Thimble for Power Vent

ZCV34 - Parts List -

Part No.	Description
Fireplaces	
ZCV34N	Heater Rated Fireplace, NG, Low E Tempered Glass, Safety Screen Barrier, Millivolt
ZCV34NH	Heater Rated Fireplace, NG, Ceramic Glass, Safety Screen Barrier, Millivolt
ZCV34NE	Heater Rated Fireplace, NG, Low E Tempered Glass, Safety Screen Barrier, Proflame 1 IPI System
ZCV34NHE	Heater Rated Fireplace, NG, Ceramic Glass, Safety Screen Barrier, Proflame 1 IPI System
ZCV34NE2	Heater Rated Fireplace, NG, Low E Tempered Glass, Safety Screen Barrier, Proflame 2 IPI System, Remote Control, Halogen Lights, Fan
ZCV34NHE2	Heater Rated Fireplace, NG, Ceramic Glass, Safety Screen Barrier, Proflame 2 IPI System, Remote Control, Halogen Lights, Fan
ZCV34LP	Heater Rated Fireplace, Propane, Low E Tempered Glass, Safety Screen Barrier, Millivolt
ZCV34LPH	Heater Rated Fireplace, Propane, Ceramic Glass, Safety Screen Barrier, Millivolt
ZCV34LPE	Heater Rated Fireplace, Propane, Low E Tempered Glass, Safety Screen Barrier, Proflame 1 IPI System
ZCV34LPHE	Heater Rated Fireplace, Propane, Ceramic Glass, Safety Screen Barrier, Proflame 1 IPI System
ZCV34LPE2	Heater Rated Fireplace, Propane, Low E Tempered Glass, Safety Screen Barrier, Proflame 2 IPI System, Remote Control, Halogen Lights, Fan
ZCV34LPHE2	Heater Rated Fireplace, Propane, Ceramic Glass, Safety Screen Barrier, Proflame 2 IPI System, Remote Control, Halogen Lights, Fan
Enclosure Grills - Option	
V34EG	Enclosure Grill, 4-3/8"H x 32-5/16" W, 3 louver grill (ready to paint)
V34EGS	Enclosure Side Grills [Qty 2] (ready to paint) 6" H x 11-1/4" W, 6 louver grills (ready to paint)
Surrounds - Option	
ZCV34S1BL	Surround- Hearth Mount Black, 33-7/8"W x 30-3/4"H
ZCV34S1PFBL	Surround- Wide Picture Frame Black, 36-5/16"W x 33-3/8"H
ZCV34S2PFBL	Surround- Picture Frame Black, 31-11/16"W x 28-3/4"H
Optional Accessories	
34ZCV-TLK	Tile Lip Kit (4 pieces)
Z46FK	Fan Kit
Z46FK2	Fan Kit PF2 (Replacement)
Refractory Liners - Option	
ZCV34PL	Porcelain Liner Kit
ZCV34RLT	Refractory Liner Traditional
ZCV34RLH	Refractory Liner Herringbone
Media Options	
WARNING: DO NOT OPERATE THIS APPLIANCE WITHOUT DECORATIVE GLASS EMBERS ON BURNER AND MEDIA TRAY	
MQG5W	Decorative Glass 1/2" White 5LB
MQG5A	Decorative Ember Glass Cobalt Blue 5LB
MQG5B	Decorative Ember Glass – Black 5LB
MQG5ZG	Decorative Glass- Zircon Glacier Ice 5LB
MQG5C	Decorative Glass Bronze 5LB
MQROCK2	Rock Set Natural
MQROCK3	Rock Set Multi-Color
MQSTONE	Decorative Stones
MQEMBER	Glowing Embers
RBCB1	Cannonballs- Assorted size and colors
LOGC44	Oak Log Set - 8 pc. Set
MQLOGF453	Driftwood Log Set – 5 pc. Set
MQRBD3	Driftwood Log Set – 5 pc. Set
MQRBRW	Birchwood Log Set – 5 pc. Set
MQLOGF34BW	Birchwood Log Set
MQLOGF34OAK	Oak Log Set
Replacement Safety Barrier	
ZCV34CSS	Safety Screen Barrier Replacement
Firebox Glass & Gasket	
34ZCV-310SS	Ceramic Glass - 27-1/2" x 23-1/8" (Gasket Required)
34ZCV-320	Low E Tempered Glass - 27-1/2" x 23-1/8"
51MQ-123A	Door Latch Assembly
Replacement Burner Assembly / Burner	
34ZCV-200A	Fireplace Burner
34ZCV-BLP	Millivolt Burner Assembly- Propane c/w Valve System
34ZCV-BN	Millivolt Burner Assembly- Natural Gas c/w Valve System
34ZCV-BLPE	Proflame 1 Burner Assembly- Propane c/w Valve System
34ZCV-BNE	Proflame 1 Burner Assembly- Natural Gas c/w Valve System
34ZCV-BLPE2	Proflame 2 Burner Assembly- Propane c/w Valve System
34ZCV-BNE2	Proflame 2 Burner Assembly- Natural Gas c/w Valve System
Conversion Kit	
34ZCV-CKLP	Millivolt LP Conversion Kit for

34ZCV-CKNG	Millivolt NG Conversion Kit
34ZCV-CKLPI	Proflame 1 LP Conversion Kit for
34ZCV-CKNGI	Proflame 1 NG Conversion Kit
34ZCV-CKLP2	Proflame 2 LP Conversion Kit for
34ZCV-CKNG2	Proflame 2 NG Conversion Kit

Valve Systems

1001-P633SI	SIT Millivolt Valve Nova LP Hi/Lo
1003-P651SI	SIT Millivolt Valve Nova LP Hi/Lo
1001-P634SI	SIT Millivolt Valve Nova NG Hi/Lo
1003-P652SI	SIT Millivolt Valve Nova NG Hi/Lo
1006-P003SI	SIT Proflame 1 Valve Nova LP Hi/Lo
1006-P002SI	SIT Proflame 1 Valve Nova NG Hi/Lo
1005-P002SI	SIT Proflame 2 Valve Nova LP
1005-P001SI	SIT Proflame 2 Valve Nova NG

Pilot Assemblies

1001-P713SI	SIT Millivolt Pilot Assembly LP
1001-P714SI	SIT Millivolt Pilot Assembly NG
1002-P047SI	SIT IPI Pilot Assembly LP
1002-P033SI	SIT IPI Pilot Assembly NG
42MCVP-258-3	Pilot Shield - for ZCV34 (Replacement Part)

Optional Thermostats and Remote Controls

GTRC	Remote Control Millivolt - Thermostat
GTMRCN	Remote Control Millivolt - Thermostat/Modulating - NG
GTMRCP	Remote Control Millivolt - Thermostat/Modulating - LP
EGTRC	Remote Control IPI PF1 - Thermostat
EGTMRCN	Remote Control IPI PF1 - Thermostat/Modulating - NG
EGTMRCP	Remote Control IPI PF1 - Thermostat/Modulating - LP
RCP2WIFI	**WI-FI Dongle and Harness Kit - for Proflame 2 Appliances** (Control your fireplace with your smartphone - App required)
Z2MT	Thermostat Digital - Vertical Wall Mount - MV/PF1
Z80PT	Thermostat Programmable Digital - Wall Mount - MV/PF1
WMBH	Wall Mount - Battery Backup Holder Kit - c/w 16 FT Harness - PF1/2 (Convenient and accessible location for Battery Backup for IPI Systems)

Miscellaneous Parts

1000-150GE	Silicone GE Red IS806 #736
1000-150MP	Hi-Temp Millpac Sealant 840099
1000-255	Orifice Brass - (State Size)
FP15GC	Stainless Steel Gas Connector

Electrical Components

34ZCV-P77912	Lamp Halogen c/w 48” lead wires
3927ZDV-P601	Halogen Solid State Transformer 12V 60W

Replacement Bulb 10W 12V 64418 or Sylvania 58691 (Lightbulbs not covered under Warranty)

Kingsman Fireplace Venting

ZDVHSK	Horizontal Vent Starter Kit - 3 FT Length Horizontal Vent Termination, Wall Thimble, 36” Flex Pipe, Mill Pac
ZDVHSK5	Horizontal Vent Starter Kit - 5 FT Length Horizontal Vent Termination, Wall Thimble, 60” Flex Pipe, Mill Pac
ZDVHSKSQ	**Horizontal Square Termination Vent Starter Kit -3 FT Length** Horizontal Vent Termination, Wall Thimble, Wall Thimble, 36” Flex Pipe, Mill Pac
ZDVHSKSQ5	**Horizontal Square Termination Vent Starter Kit -5 FT Length** Horizontal Vent Termination, Wall Thimble, Wall Thimble, 60” Flex Pipe, Mill Pac
ZDVDKA	Duravent Fireplace Adapter
FDVVT40	Vertical Vent Termination
FDVHT	Horizontal Vent Termination
FDVHSQ	Horizontal Square Termination
Z47ST24	Horizontal Snorkel Termination (24” Tall, 14-1/2” Center to Center)
Z47ST36	Horizontal Snorkel Termination (36” Tall, 26-1/2” Center to Center)
Z57STSC	Safety Cage for Horizontal Snorkel Termination
FDVHSCU	Safety Cage for Horizontal Termination
ZDVAIS	Attic Insulation Shield
Z7AIS24	Attic Insulation Shield 24”
ZDVVOS	Offset Support
ZDVFS	Firestop Spacer
ZDVRS	Roof Support
ZDVWT	Wall Thimble (Horizontal Venting)
Z58WTS	Wall Thimble Shield - Must be used for Non-Vented enclosures with horizontal venting.
ZDVSS	Siding Shield for FDVHT
ZDVSSLR	Siding Shield - Large Return
ZDV48GP	Galvanized Pipe 7” Dia. x 48” (Vertical Installations)
ZDVAAF	Flashing 7” c/w Storm Collar (1/12 to 7/12)
ZDVAF2	Flashing 7” c/w Storm Collar (8/12 to 12/12)
ZDVAF3	Flashing 7” c/w Storm Collar Flat
ZDV7SC	Storm Collar 7”
ZDVFK5	Flex Kit (4” & 7” Dia.) x 2.5’ (Unexpanded) 5’ Expanded
ZDVFK8	Flex Kit (4” & 7” Dia.) x 4’ (Unexpanded) 8’ Expanded
ZDVFK20	Flex Kit (4” & 7” Dia.) x 10’ (Unexpanded) 20’ Expanded *Kits are complete with spring stand-offs & silicone.
ZDV4FC	Flex Connector 4” Diameter
ZDV7FC	Flex Connector 7” Diameter
ZDV4SS	Spring 4” Standoff Spacer

LIMITED LIFETIME WARRANTY

This Limited Lifetime Warranty applies only while the unit remains at the site of the original installation and only if the unit is installed inside the continental United States, Alaska, Hawaii, and Canada. The warranty applies only if the unit is installed and operated in accordance with the printed instructions and in compliance with applicable installation and building codes and good trade practices.

BASIC ONE YEAR WARRANTY

During the first year after installation of the appliance, we will provide a replacement for any component part of your unit found to be defective in materials or workmanship, including labour costs. Repair work requires prior approval by Kingsman, labour costs are based on a predetermined rate schedule and any repair work must be done through an authorized Kingsman dealer.
(Excluded Components: Accent Light Bulbs, Gasketing, Glass Fronts, and Paint)

LIMITED LIFETIME WARRANTY

The heat exchanger, combustion chamber and burner of every Kingsman product excluding the Outdoor Firepit are warranted against materials or workmanship during the period the product is owned by the original owner. The part to be replaced must be returned to our distributor in exchange for the replacement part. Any labor, material, freight and/or handling charges associated with any repair or replacement pursuant to this Limited Lifetime Warranty will not be covered by this warranty.

GENERAL TERMS

In lieu of providing a replacement part, we may, at our option, provide the distributor's component purchase price from us or a credit equal to the distributor's component purchase price from us toward the purchase of any new unit which we distribute. If a credit is given in lieu of a replacement part, the rating plate from the unit being replaced must be submitted on a warranty claim, and the unit being replaced must be made available to our distributor for disposition.

In establishing the date of installation for any purpose, including determination of the starting date for the term of this Limited Lifetime Warranty, reasonable proof of the original installation date must be presented*, otherwise the effective date will be based upon the date of manufacture plus thirty (30) days.

We will not be responsible for and you, the user, will pay for: (a) damages caused by accident, abuse, negligence, misuse, riot, fire, flood, or Acts of God (b) damages caused by operating the unit where there is a corrosive atmosphere containing chlorine, fluorine, or any other damaging chemicals (other than in a normal residential environment) (c) damages caused by any unauthorized alteration or repair of the unit affecting its stability or performance (d) damages caused by improper matching or application of the unit or the unit's components (e) damages caused by failing to provide proper maintenance and service to the unit (f) any expenses incurred for erecting, disconnecting or dismantling the unit (g) parts or supplies used in connection with service or maintenance (h) damage repairs, inoperation or inefficiency resulting from faulty installation or application (i) electricity or fuel costs or any increase in electricity or fuel cost whatsoever including additional or unusual use of supplemental electric heat.

We shall not be liable for any incidental, consequential, or special damages or expenses in connection with any use or failure of this unit. We have not made and do not make any representation or warranty of fitness for a particular use or purpose, and there is no implied condition of fitness for a particular use or purpose. We make no express warranties except as stated in this Limited Lifetime Warranty. No one is authorized to change this Limited Lifetime Warranty or to create for us any other obligation or liability in connections with this unit. Any implied warranties shall last for one year after the original installation. Some states and provinces do not allow the exclusion or limitation of incidental or consequential damages or do not allow limitations on how long an implied warranty or condition lasts, so the above limitations or exclusions may not apply to you. The provisions of this limited warranty are in additions to and not a modification of or subtraction from any statutory warranties and other rights and remedies provided by law.

Save this certificate. It gives you specific legal rights, and you may also have other rights which may vary from state to state and province to province.

In the event your unit needs servicing, contact your dealer or contractor who installed or serviced your unit. When requesting service, please have the model and serial number from each unit readily available. If your dealer needs assistance, the distributor is available for support and we, in turn support the distributor's efforts.

Fill in the installation date and model and serial numbers of the unit in the space provided below and retain this limited warranty for your files.

Model No. _____ **Serial No.** _____ **Date installed** _____

Dealer or Contractor Name: _____

*To receive advantage of your warranty, you must retain the original records that can establish the installation date of your unit.

The Ultimate in Design, Engineering & Quality