- Installation Instructions -

Intertek C#4000720

marquis FIREPLACE COLLECTION
BENTLEY

Model Numbers: ZCV39N, ZCV39NE, ZCV39NE2, ZCV39LP, ZCV39LPE, ZCV39LPE2
ZCV39NH, ZCV39NHE, ZCV39NHE2, ZCV39LPH, ZCV39LPHE, ZCV39LPHE2

ZCV42N, ZCV42NE, ZCV42NE2, ZCV42LP, ZCV42LPE, ZCV42LPE2
ZCV42NH, ZCV42NHE, ZCV42NHE2, ZCV42LPH, ZCV42LPHE, ZCV42LPHE2

Certified to: CSA/ANSI Z21.88:19 • CSA 2.33:19
and CSA2.17-2017

⚠ WARNING:
FIRE OR EXPLOSION HAZARD
Failure to follow safety warnings exactly could result in serious injury, death, or property damage.

-Do not store or use gasoline or other flammable vapors and liquids in the vicinity of this or any other appliance**.**

-WHAT TO DO IF YOU SMELL GAS

- Do not try to light any appliance.
- Do not touch any electrical switch; do not use any phone in your building.
- Leave the building immediately.
- Immediately call your gas supplier from a neighbor's phone. Follow the gas supplier's instructions.
- If you cannot reach your gas supplier, call the fire department

-Installation and service must be performed by a qualified installer, service agency or the gas supplier.

INSTALLER: Leave this manual with the appliance. **CONSUMER:** Retain this manual for future reference.

This appliance may be installed in an aftermarket, permanently located, manufactured home (USA only) or mobile home, where not prohibited by local codes.

This appliance is only for use with the type of gas indicated on the rating plate. This appliance is not convertible for use with other gases, unless a certified kit is used.

NOT FOR USE WITH SOLID FUEL

For Propane Horizontal installations the venting must be an additional one foot above the minimum vertical rise off the flue before going horizontal.

Kingsman Fireplaces maintains a program of continuous testing, refinement and improvements of all its products. Some aspect of units shown here may be changed at any time without notice or obligation.

A Division of R-Co. Inc. 2340 Logan Ave.
Winnipeg, Manitoba Canada R2R 2V3 Ph.: (204) 632-1962
Printed in Canada November 3, 2026 Part# 39ZCV-MAN19

IT IS THE RESPONSIBILITY OF THE HOME OWNER TO ENSURE THAT NO ONE TOUCHES A HOT APPLIANCE.

- If the barrier becomes damaged, the barrier shall be replaced with the manufacturer's barrier for this appliance.
- Any safety screen, guard, or barrier removed for servicing the appliance, must be replaced prior to operating the appliance.
- Children and adults should be alerted to the hazards of the high surface temperatures of this appliance and should stay away to avoid burns or ignition of clothing.
- Do not clean when the glass is hot.
- Young children should be carefully supervised when they are in the same room as the appliance. Toddlers, young children and others may be susceptible to accidental contact burns.
- A physical barrier is recommended if there are at risk individuals in the house. To restrict access to a fireplace or stove, install an adjustable safety gate to keep toddlers, young children and other at-risk individuals out of the room and away from hot surfaces.
- Do not leave the fireplace remote control where it is accessible to children.

DANGER



HOT GLASS WILL CAUSE BURNS.

DO NOT TOUCH GLASS UNTIL COOLED.

NEVER ALLOW CHILDREN TO TOUCH GLASS.

A barrier designed to reduce the risk of burns from the hot viewing glass is provided with this appliance and must be installed for the protection of children and other at-risk individuals.

If the barrier becomes damaged, the barrier must be replaced with the manufacturer's barrier for this appliance.

WARNING:

A HORIZONTAL VENT CERTIFIED GUARD (SAFETY CAGE) IS AVAILABLE WHEN REQUIRED BY LOCAL CODES.

SAFETY CAGES ARE AVAILABLE FOR ALL HORIZONTAL VENT TERMINATIONS. CHECK WITH YOUR DEALER.

- **TERMINATION CAP IS HOT!** Do not place flammable materials on or within 24 inches of termination caps.
- It is imperative that the vent termination be located observing the minimum clearances as shown in manual.
- There must not be any obstruction such as bushes, garden sheds, fences, decks or utility buildings within 24" from the front of the termination plate.
- Do not locate termination where excessive snow or ice build-up may occur. Be sure to check vent termination area after snow falls and clear to prevent accidental blockage of venting system. When using snow blowers, make sure snow is not directed towards vent termination area.
- Venting terminal shall not be recessed into a wall or siding.

Table of Contents

Table of Contents..... 3-4

Warnings, Installations and Operations - Installation Regulations…….. 5

Installation Requirements for the Commonwealth of Massachusetts, Carbon Monoxide (CO) Detector…… 6

Pre-installation Questions and Answers / Operations and Maintenance Instructions... 7

Fireplace Installations in Covered Outdoor Locations……... 8

Mobile Home/Manufactured Housing Installation……..... 9

Framing Your Gas Fireplace…… 10

Non-Vented Chase VS Vented Chase - Choose Your Installation…… 11

Venting in the Chase – Warning…… 12

Vented Chase Requirements…… 13

Vented Chase- Removal of Vent Covers… 13

V39EG Grill Installation for ZCV39 / 42 Vented Chase…….. 14

V39EGS Side Grill Installation for ZCV39 / 42 Vented Chase……. 15

Framing- Nailing Tab Guide……. 16

ZCV39 INSTALLATION – NON-VENTED CHASE

Locating Your Appliance / Fireplace Dimensions……... 17

Framing Dimensions for Non-Vented Chase…… 18

Framing Dimensions for Non-Vented Chase Built Outside of Room…… 19

Mantel Clearances for Non-Vented Chase…… 20

Clearance to Combustibles for Non-Vented Chase…… 21

Facing Requirements for Non-Vented Chase…… 22

ZCV39 INSTALLATION – VENTED CHASE

Framing Dimensions for Vented Chase (built outside of room) V39EG Grill……... 23

Framing Dimensions for Vented Chase with V39EG -OR- V39EGS Grills…….. 24

Framing Dimensions for Vented Chase with Open Top…… 25

Framing Dimensions- Recessed Vented Chase- V39EG -OR- V39EGS Grills……... 26

Framing Dimensions - Recessed Vented Chase with Open Top…… 27

Mantel Clearances- for Vented Chase……. 28

Clearance to Combustibles for Vented Chase…… 29

Facing Requirements for Vented Chase…… 30

Electrical Receptacle in a Vented Chase… 31

ZCV42 INSTALLATION – NON-VENTED CHASE

Locating Your Appliance / Fireplace Dimensions…….. 32

Framing Dimensions for Non-Vented Chase…… 33

Framing Dimensions for Non-Vented Chase Built Outside of Room…… 34

Mantel Clearances for Non-Vented Chase…… 35

Clearance to Combustibles for Non-Vented Chase…… 36

Facing Requirements for Non-Vented Chase…… 37

ZCV42 INSTALLATION – VENTED CHASE

Framing Dimensions for Vented Chase (built outside of room) V39EG Grill…….. 38

Framing Dimensions for Vented Chase with V39EG -OR- V39EGS Grills…….. 39

Framing Dimensions for Vented Chase with Open Top…… 40

Framing Dimensions - Recessed Vented Chase - V39EG -OR- V39EGS Grills…….. 41

Framing Dimensions - Recessed Vented Chase with Open Top…… 42

Mantel Clearances- for Vented Chase…… 43

Clearance to Combustibles for Vented Chase…… 44

Facing Requirements for Vented Chase…. 45

Electrical Receptacle in a Vented Chase… 46

BASIC FINISHING: ZCV39 & ZCV42

CSS3 Screen Installation……... 47

Inside Fit Safety Screen Series 2 Installation…… 48

Surround Installation……... 49

Basic Finishing for S1 or S1PF Surround… 50-51

S2PF Surround Dimensions…….. 52

Basic Finishing for S2PF Surround: Concrete Board…… 52

Basic Finishing for S2PF Surround: Stone or Brick…….. 53

Basic Finishing for S2PF Surround: Tile Border…… 54

MQ39DD / MQ42DD Doors: Stone, Brick, or Tile Border…… 55-56

MQZCV39DD / MQZCV42DD Designer Door Installations…… 57
ZCV-TLK Tile Lip Kit…… 58

Kits and Accessories

51UHS Box…….…… 59
Component Locations…… 60
Z46FK Fan Kit Installation…….. 61
Split Receptacle- Fan Speed Control Outside of Fireplace…… 62
Porcelain Liner Installation…… 63
Brick Liner Installation…… 64
Cutting Refractory Liners to work with GT Glass Trays…….. 65
ZCV39GT/ ZCV42GT Glass Tray Setup….. 66
ULK2 Universal Light Kit…… 67-68
LogF3- 7 Piece Setup…… 69
Log C3 / F3 - 5 Piece Setup…….. 70
MQLOGF39BW 7 Piece Birch Log Set…… 71
MQ42D Driftwood…… 72-73
RBCB1 Cannonballs……... 74
MQ Dealer Accessories for ZCV39 / ZCV42…… 75-77
MQ Log F9 Setup…… 78-79

General Installation, Use, and Maintenance

Glass Door Installation…… 80
Door and Glass Information……... 81
Gas Line Installation…… 82
Millivolt System, Lighting, and Burner Control……... 83
Lighting Instructions for Millivolt Valve with 7 Day Timer…….. 84
Annual Inspection List for Determining Safe Operation of a Direct Vent Gas Fireplace…… 85
Burner System Maintenance…… 86
Conversion Kit Instructions – PART A……. 86-87
Gas Conversion for Top Convertible Pilot – Part B…… 88
Gas Conversion for Modulator – PART C… 89
Burner Removal / Burner System Removal / Installation…….. 90

Proflame 1 IPI Section

Overview……..... 91
Remote Control Operation..... 92
IPI Electronic Ignition Parts List …… 93
IPI Schematic Drawing #1: Basic Manual Hi / Lo – Manual On / Off..... 94
Configuration #2: Remote ON/OFF and Manual HI/LO Capabilities…… 94
Operating the Receiver Without Batteries For GT / EGT / GTM / EGTM Remote Controls…… 95
Configuration #3: Remote ON/OFF, variable HI/LO, and fan capabilities…….. 96
IPI Lighting Instructions…….. 97

Proflame 2 IPI System

Proflame 2 IPI System Parts List..... 98
Proflame 2 IFC Module and Remote Control..... 99
Cold Climates – CPI Setting - Proflame 2 Remote Control..... 100
Proflame 2 Remote Control..... 101-102
Proflame 2 Label Diagram..... 103
WMBH – Wall Mount Battery Holder-Option…… 104

Venting

Vent Terminal Clearances..... 105
General Vent Installation Information…….. 106
Installation of Side Wall Venting..... 107
Venting Routes and Components / Horizontal Vent Table…… 108
Horizontal Snorkel Terminations…….. 109
Venting Straight Up Through Roof..... 110-111
Venting - Cathedral Ceiling…… 112
Fireplace Installations Using Co Linear Flex Kits…… 113
Approved for PVH58 / PVH58FM Power Vent…… 114
Power Vent Control Module Installation..... 115

Parts Lists

Power Vent Parts List for 4/7 Venting…….. 116
ZCV39 Parts List…….. 117-118
ZCV42 Parts List…….. 119-120

Troubleshooting the Gas Control System… 121

Limited Lifetime Warranty…….. 122

Warnings, Installations and Operations - Installation Regulations

This gas appliance must be installed by a qualified installer in accordance with local building codes, or in the absence of local codes, with the current CAN/CSA-B149.1 or .2 Installation Code (in Canada) or the current National Fuel Gas Code Z223.1- NFPA 54 when installed in the United States. This appliance, when installed, must be electrically connected and grounded in accordance with local codes, or in the absence of local codes, with the current CSA C22.1 Canadian Electrical Code or with the National Electrical Code; ANSI/NFPA 70 when installed in the United States.

⚠ WARNING

FOR SAFE INSTALLATION AND OPERATION OF YOUR GAS FIREPLACE PLEASE NOTE THE FOLLOWING:

1. Do not clean when the glass is hot.
2. Do not use abrasive cleaners.
3. Using a substitute glass will void all product warranties.
4. For safe operation, glass doors must be closed.
5. When purging the gas line, the glass front must be removed.
6. Do not strike or abuse glass. Take care to avoid breakage.
7. Do not alter gas orifice.
8. No substitute materials may be used other than factory supplied components.
9. This appliance gives off high temperatures and should be located out of heavy traffic areas and away from furniture and draperies.
10. Children and adults should be alerted to the hazards of the high surface temperatures of this appliance and should stay away to avoid burns or ignition of clothing.
11. Young children should be carefully supervised when they are in the same room as the appliance. Toddlers, young children and others may be susceptible to accidental contact burns. A physical barrier is recommended if there are at risk individuals in the house. To restrict access to a fireplace or stove, install an adjustable safety gate to keep toddlers, young children and other at risk individuals out of the room and away from hot surfaces.
12. Under no circumstances should any solid fuels (wood, paper) be used in this appliance.
13. Under no circumstances should this appliance be modified. Any parts that have to be removed for servicing should be replaced prior to operating this appliance.
14. Any safety screen, guard, or barrier removed for servicing an appliance must be replaced prior to operating the appliance.
15. Installation and repair should be done by a qualified service person. The appliance should be inspected before use and at least annually by a professional service person. More frequent cleaning may be required due to excessive lint from carpeting, bedding material, et cetera. It is imperative that control compartments, burners and circulating air passageways of the appliance be kept clean. Make sure that the gas valve and pilot light are turned off before you attempt to clean this unit.
16. Clothing or other flammable material should not be placed on or near the appliance. This appliance should not be used as a drying rack for clothing nor should Christmas stockings or decorations be hung from it.
17. Do not use this heater if any part has been under water. Immediately call a qualified service technician to inspect the heater and to replace any part of the control system and any gas control which has been under water.
18. Do not operate appliance unless completely installed as per installation instructions.
19. Failure to position the parts in accordance with these diagrams or failure to use only parts specifically approved with this appliance may result in property damage or personal injury.
20. **WARNING: Do not operate appliance with the glass front removed, cracked or broken. Replacement of the glass should be done by a licensed or qualified service person.**
21. The appliance area must be kept clear and free from combustible materials, gasoline, and other flammable vapors and liquids.
22. The front of the fireplace gives off high temperatures that could ignite combustible material which is kept close to the front of the unit.
23. Ensure that power to the Fireplace is turned off before servicing.
24. Do not operate this Fireplace without the glass front or with a broken glass.
25. Improper installation, adjustment, alteration, service or maintenance can cause injury or property damage. Refer to the owner's information manual provided with this appliance. For assistance or additional information consult a qualified installer, service agency, or the gas supplier.
26. Operation of this appliance when not connected to a properly installed and maintained venting system or tampering with the blocked vent shutoff system can result in carbon monoxide (CO) poisoning and possible death.
27. This appliance is equipped with a three-prong (grounding) plug for your protection against shock hazard and should be plugged directly into a properly grounded three-prong receptacle. Do not cut or remove the grounding prong from this plug.
28. **NOT INTENDED FOR USE AS A PRIMARY HEAT SOURCE.** This appliance is tested and approved as either supplemental room heat or as a decorative appliance. It should not be factored as primary heat in residential heating calculations.
29. This appliance must not be connected to a chimney flue serving a separate solid-fuel burning appliance.
30. Remove all loose materials from the appliance (manual, remote control, etc.) before connecting gas and electricity.
31. Ensure that the remote control is "OFF" before connecting gas and electricity to the appliance.

Installation Requirements for the Commonwealth of Massachusetts

In the Commonwealth of Massachusetts, the installer or service agent shall be a plumber or gas fitter licensed by the Commonwealth.

When installed in the Commonwealth of Massachusetts or where applicable codes; the unit shall be installed with a CO detector per the requirements listed below.

1. For direct-vent appliances, mechanical-vent heating appliances or domestic hot water equipment, where the bottom of the vent terminal and the air intake is installed below four feet above grade the following requirements must be satisfied:
   - **A.** If there is not one already present, on each floor level where there are bedroom(s), a carbon monoxide detector and alarm shall be placed in the living area outside the bedroom(s). The carbon monoxide detector shall comply with NFPA 720.
   - **B.** A carbon monoxide detector shall be located in the room that houses the appliance or equipment and shall:
     - Be powered by the same electrical circuit as the appliance or equipment such that only one service switch services both the appliance and the carbon monoxide detector;
     - Have battery back-up power;
     - Meet ANSI./UL 2034 Standards and comply with NFPA 720; and
     - Have been approved and listed by a Nationally Recognized Testing Laboratory as recognized under 527 CMR.
   - **C.** A Product-approved vent terminal must be used, and if applicable, a Product-approved air intake must be used. Installation shall be in strict compliance with the manufacturer's instructions. A copy of the installation instructions shall remain with the appliance or equipment at the completion of the installation.
   - **D.** A metal or plastic identification plate shall be mounted at the exterior of the building, four feet directly above the location of vent terminal. The plate shall be of sufficient size to be easily read from a distance of eight feet away, and read "Gas Vent Directly Below".
2. For direct-vent appliances, mechanical-vent heating appliances or domestic hot water equipment where the bottom of the vent terminal and the air intake is installed above four feet above grade the following requirements must be satisfied:
   - **A.** If there is not one already present, on each floor level where there are bedroom(s), a carbon monoxide detector and alarm shall be placed in the living area outside the bedroom(s). The carbon monoxide detector shall comply with NFPA 720.
   - **B.** A carbon monoxide detector shall:
     - Be located in the room that houses the appliance or equipment;
     - Be either hard-wired or battery powered or both; and
     - Shall comply with NFPA 720.

A Product-approved vent terminal must be used, and if applicable, a Product-approved air intake must be used. Installation shall be in strict compliance with the manufacturer instructions. A copy of the installation instructions shall remain with the appliance or equipment at the completion of the installation.

For the state of Massachusetts a **T-handle gas shut-off valve** must be used on a gas appliance. This T-handle gas shut-off valve must be listed and approved by the state of Massachusetts. This is in reference to the state of Massachusetts state code CMR238.

Carbon Monoxide (CO) Detector

NOTE: It is recommended that a Carbon Monoxide (CO) Detector be installed in or near bedrooms and on all levels of your home. Place a detector about 15ft [4.5m] outside the room that houses your gas appliance.

Certified for installation in a bedroom or bed/sitting room. In Canada must be installed with listed millivolt thermostat. In USA see local codes.

⚠ WARNING

This product and the fuels used to operate this product (liquid propane or natural gas), and the products of combustion of such fuels, can expose you to chemicals including benzene, which is known to the State of California to cause cancer and reproductive harm. For more information go to: www.P65Warnings.ca.gov.

Pre-installation Questions and Answers

About curing of the paint
Your stove or fireplace has been painted with the highest quality silicone stove paint. This paint dries quickly in 15-20 minutes when first applied at the factory. However, due to the high temperature silicone components, the paint will cure when heat is applied to the appliance as it is first used. The following information applies to the curing process to get the paint fully hard and durable. **Note: Use of painter's tape is not recommended, as it may damage the paint.**

Fire the appliance four successive times for 10 minutes each firing and a 5 minute cool down between each. Be aware during log and firebox paint curing that a white deposit may be developing on the inside of the glass doors. It is important to remove this white deposit from the glass doors using a fireplace glass cleaner.

- Babies, small children, pregnant women and pets should leave the area during the cure phase.
- Ventilate well, open doors and windows.
- Do not touch during curing.

Why does my fireplace or stove give off odor?

It is normal for your fireplace to give off some odor at first. This is due to the curing of the paint, adhesives, silicones and any undetected oil from the manufacturing process as well as the finishing materials used with the installations (e.g. marble, tile and the adhesives used to adhere this product to the walls can react with heat and cause odors).

It is recommended that you burn your gas fireplace or stove for a minimum of four hours at a time with the fan off (if a fan is present) after the curing of the paint has been completed. These odors can last upward to 40 hours of burn time; keep burning at a minimum of four hours per use until odors dissipate.

Noise coming from the fireplace?

Noise is caused by the expansion and contraction of metal as the appliance heats up and cools down. This is normal and is similar to the sounds produced by a furnace or heating duct. This noise does not affect the operation or longevity of your fireplace.
It is also normal for the fan to make some noise when it comes on. This noise can be reduced somewhat by turning down the speed of the fan with the variable speed control. Be aware, however, that this will reduce the volume of heated air circulated into the room by the fan.

Note to the Installer:
Be sure appliance is working properly and its operation (including remote control operation, if included) is fully explained to and understood by the customer.

Operations and Maintenance Instructions

For safe installation and operation note the following:

- Be sure to read and understand all the instructions in this manual before operation of appliance.
- Ensure all wiring is correct and properly enclosed to prevent possible shock.
- Check for gas leaks.
- Make sure the glass door is properly installed before operation. Never operate the appliance with the glass door removed.
- Make sure venting and termination cap are installed and unobstructed.
- If brick or porcelain liners are used, ensure they are installed.
- Verify that the pilot can be seen when lighting the appliance. If not, the log or rock placement is incorrect.
- If the unit is turned off, you must wait a minimum of 60 seconds before re-lighting it.
- Venting systems should be periodically examined by a qualified agency.
- The flow of combustion and ventilation air must not be obstructed.
- The Burner/Log Assembly has been engineered and permanently adjusted for proper flame control.
- Periodically remove the logs from the grate assembly and vacuum any loose particles from the grate and burner areas. See Log Placement page to remove logs. Vacuum burner parts and replace logs.
- Never use your gas fireplace as a cooking device.
- Label all wires prior to disconnection when servicing controls. Wiring errors can cause improper and dangerous operation. Verify proper operation after servicing.
- Areas in and around the Chase Vent Openings should be cleaned annually.

Fireplace Installations in Covered Outdoor Locations
– FOR BASIC MILLIVOLT UNITS ONLY- NO FAN – NO LIGHTS-

CAUTION – Installation of an indoor gas fireplace with an outdoor exposure is not covered under the (ANSI Z21.88 – CSA 2.22 or ANSI Z21.50 – CSA 2.33) standard(s) used to certify the indoor gas-fired fireplace. The Intertek safety certification will not apply to this installation method. This installation method must be deemed acceptable by the Authority Having Jurisdiction (AHJ) prior to the indoor gas fireplace being installed.

Kingsman and Marquis Direct Vent fireplaces may be installed into outdoor locations provided they are suitably protected from direct water impingement. However, all installation clearances in the appliance manual must be observed. Framing, Clearances to Combustibles, Mantel Heights, Facing Requirements, Venting Installation, etc. **Use supplied Safety Screen. No vented chase is allowed outdoors.**

- All wiring connections to line power shall be in accordance with outdoor requirements of; -NECA NFPA 70 in the USA -Canadian Electrical Code, CSA C22.1 for Canada.
- The Fireplace is not to be operated in temperatures below freezing (0°C / 32°F).
- ⚠ **NOTE: TEMPERED GLASS WARNING:** Tempered glass is vulnerable to rapid and/or extreme changes in temperature (thermal shock). Take care to prevent water from contacting the fireplace, especially if it is hot.
- See-Through Units are suitable for an outdoor location, but not on the outside wall of a house or other structure, as air flows through both sides of the fireplace.
- A Minimum sheltering cover (overhang) of 1/2 the distance from the base of the fireplace to the ceiling (base of roofline) is required**.**

EXAMPLE: The bottom of the fireplace is 84” from the ceiling.
Therefore, 42” of sheltering cover is required above fireplace.

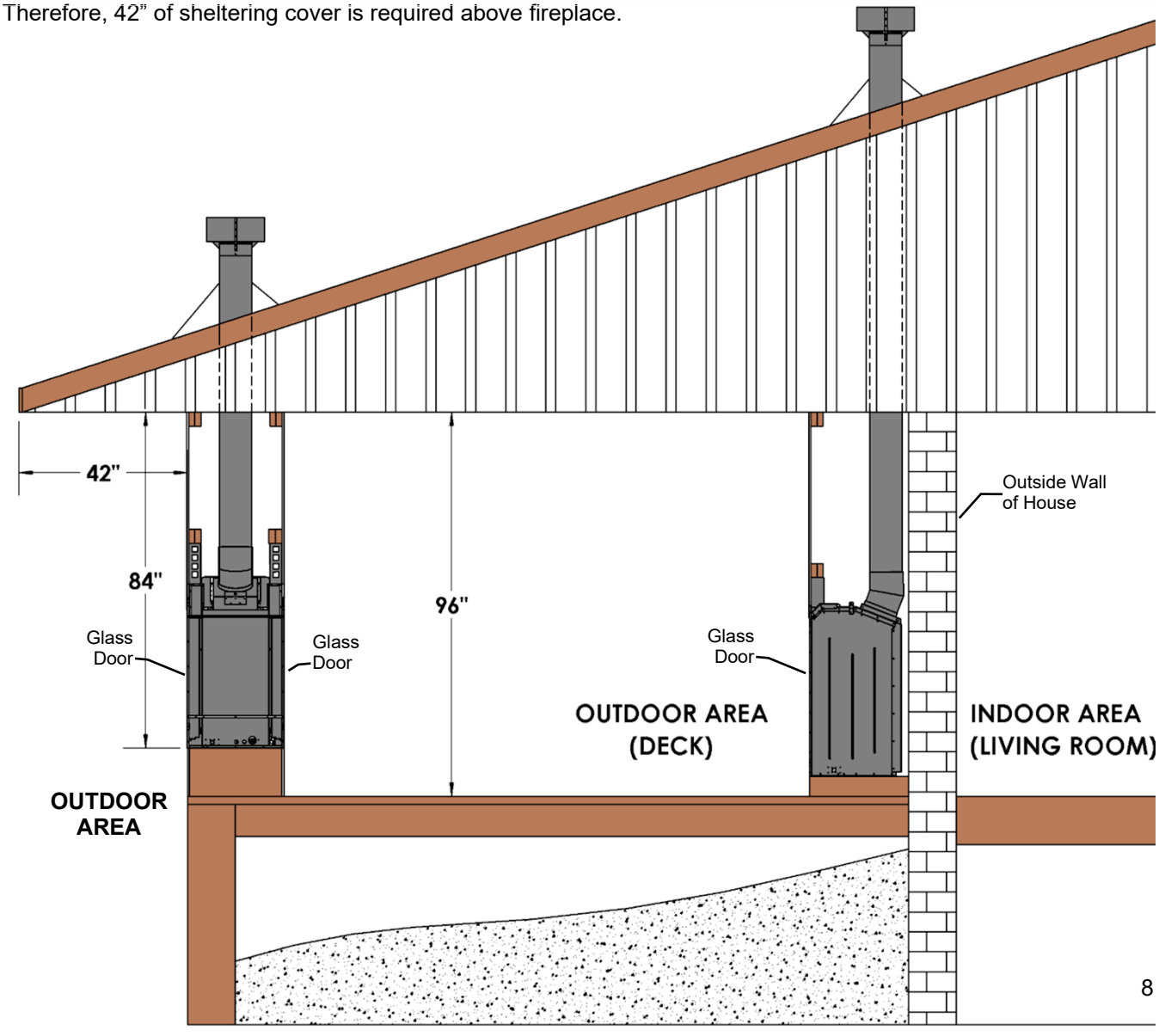

Mobile Home/Manufactured Housing Installation

This Direct Vent System Appliance must be installed in accordance with the manufacturer's installation instructions and the Manufactured Home Construction and Safety Standard Title 24 CFR, Part 3280, or the current Standard for Fire Safety Criteria for Manufactured Home Installations, Sites, and Communities ANSI/NFPA 501A, and with CAN/CSA Z240 MH Mobile Home Standard in Canada.

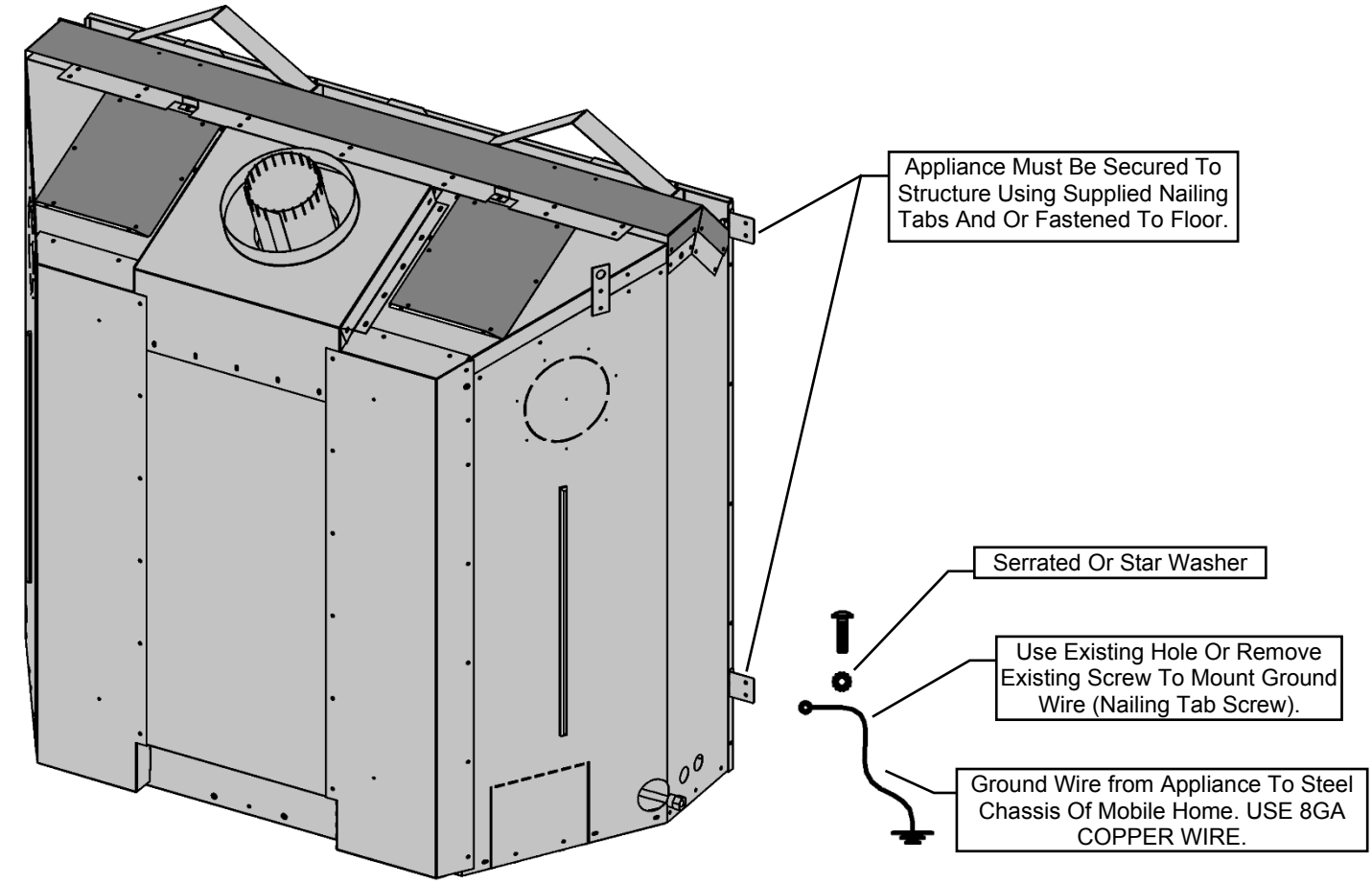

THE VENTED GAS FIREPLACE HEATERS IN THIS MANUAL MAY BE INSTALLED IN MANUFACTURED (MOBILE) HOMES AFTER FIRST SALE IN THE USA.

THE VENTED GAS FIREPLACE HEATERS IN THIS MANUAL MAY BE INSTALLED IN MANUFACTURED (MOBILE) HOMES IN CANADA.

Please follow the current ANSI/NFPA 70 National Electrical Code in the USA and CAN/CSA C22.1 Canadian National Electrical Code in Canada.

An appliance must be grounded to the steel chassis of the home with 8 ga. copper wire using a serrated or star washer to penetrate paint or protective coating to insure grounding.
Use carriage bolt at the attachment point (see diagram above) to secure the appliance to the floor.

⚠ Warning: Do not compromise the structural integrity of the manufactured home wall, floor or ceiling, during installation of appliance or venting.

For required venting components see venting installation in appropriate section of this manual.

Certified for installation in a bedroom or bed/sitting room. In Canada must be installed with listed millivolt thermostat. In USA see local codes.

ZCV39 / ZCV42 Framing Your Gas Fireplace

This section is intended for qualified installers only. Before beginning, make note of where the gas and electrical accesses are located on the unit. This will streamline the construction process. Furthermore, familiarize yourself with the venting and clearance requirements (see Venting section) for this appliance. Failure to comply with those requirements can seriously compromise the safety and operation of the fireplace.

Specifications

1. Cold climate installation recommendation: When installing this fireplace against non insulated exterior wall or chase, it is recommended that the outer walls be insulated to conform to applicable insulation codes. Drywall & vapor barrier must be installed over insulation to prevent contact of insulation and unit.
2. Choose fireplace location and frame in accordance with the fireplace framing dimensions specified (view diagrams).
3. Drywall or other combustible material can extend up to the Drywall Stops located on the sides of the unit, and up to the bottom and top.
4. A Hearth is not required for this unit.

Vertical Venting in Cold Climates

In cold climate conditions where temperatures go below -10 degrees Celsius or 14 degrees Fahrenheit, we recommend that the chase be insulated and where the vent pipe enters into the attic space that the pipe be wrapped with an insulated Mylar sleeve. This will increase the temperature of the vent and help the appliance to vent properly in cold weather conditions.

It is also important in vertical vented direct vent appliances that the appliance be operated daily during the winter months as this will help stop the termination from freezing up. We recommend using a thermostat set at room temperature to allow the unit to cycle.

For IPI models it may be necessary to set the appliance to Standing Pilot mode to maintain heat in the cavity. The purpose of this procedure is to prevent cold air from penetrating the chimney and then onto the living space. Therefore, when the internal temperature is slightly elevated the fireplace is able to freely exhaust its combustion and hence making it easier to startup.

Certified for installation in a bedroom or bedsitting room. In Canada must be installed with listed millivolt thermostat (In USA see local codes).

Stand-off Locations

Make note of where the stand-off locations are. These stand-offs are provided as indicators to illustrate the boundaries for framing. Therefore, no framing material is permitted to extend beyond these stand-offs.

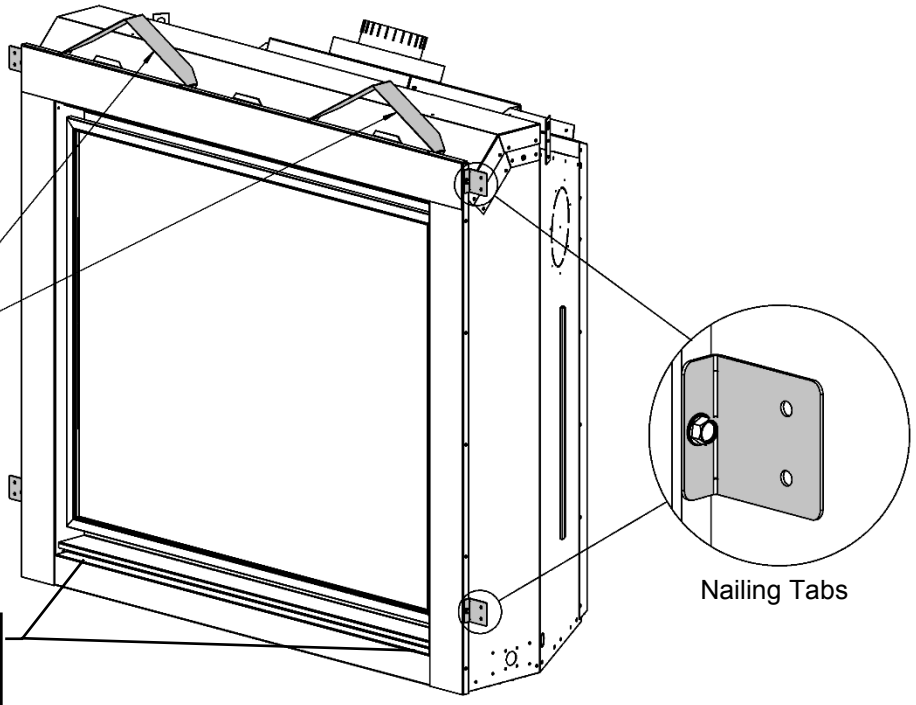

Caution: Standoffs on top of the unit must be folded into position & screwed down **Prior** to installation.

Nailing Tabs

Holes are provided in bottom of unit to secure appliance to floor after installation.

ZCV39 / 42 – Non-Vented Chase VS Vented Chase - Choose Your Installation

FRAMED AS NON-VENTED CHASE:
(Fireplace is installed <u>As Shipped</u>, with Ventilation Plates in place.)

This is a traditional fireplace installation where the fireplace is built into a non-vented chase.

- Only non-combustible materials may cover the face of the fireplace.
- Chase wall surface temperature will be warmer.
- Mantel height is higher than Vented Chase.

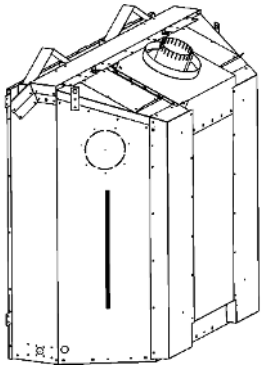

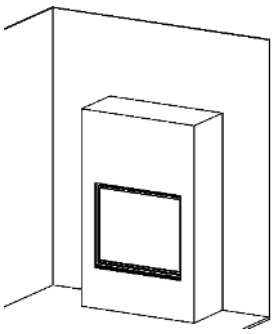

Chase built into room

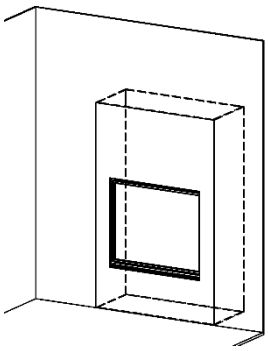

Chase built outside of room (Doghouse)

FRAMED AS VENTED CHASE:
(<u>Ventilation Plates are removed</u> from fireplace before it is installed into a Vented Chase.)

- Combustible materials may cover face of fireplace.
- TV's or Artwork can be placed above fireplace.
- Chase walls will be cool to the touch.
- Mantel height is lower than Non-Vented Chase.
- Chase must be vented at the top with a specified grill **(V39EG, V39EGS Side Grills)** or opening size.

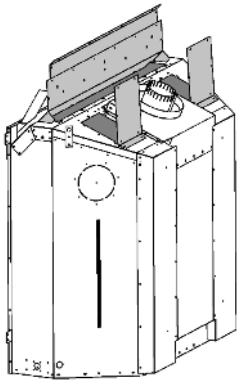

NOTE: <u>For oversized enclosures</u> (i.e., along a long wall), it is recommended to seal them off internally. This will help to remove heat and prevent hot spots. **Be sure to maintain all required clearances and minimum dimensions.**

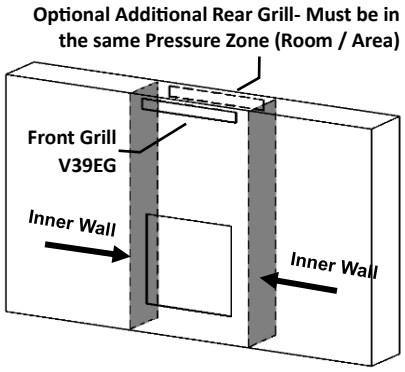

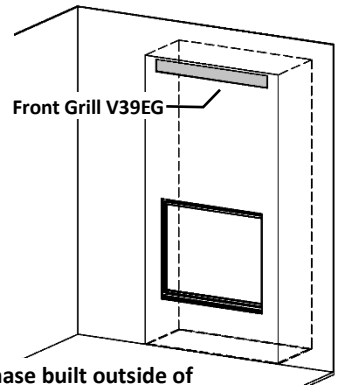

Chase built outside of room (Doghouse)

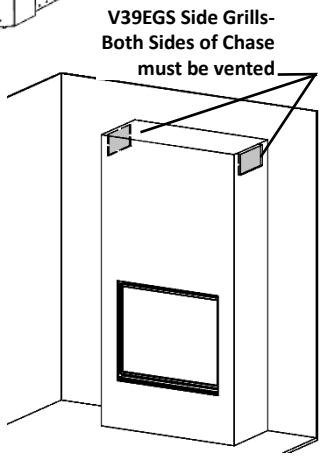

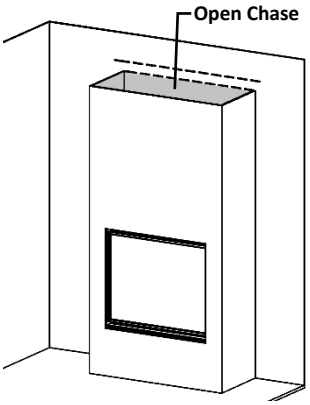

<u>Vented Chase- Recessed Options:</u> Ventilation Plates must be removed

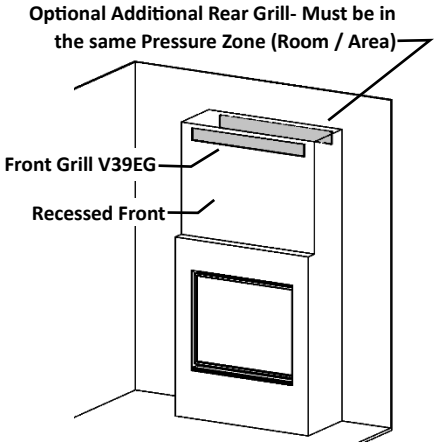

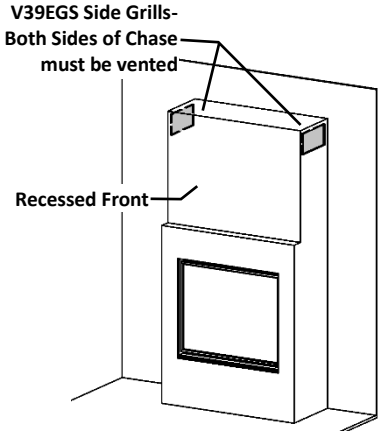

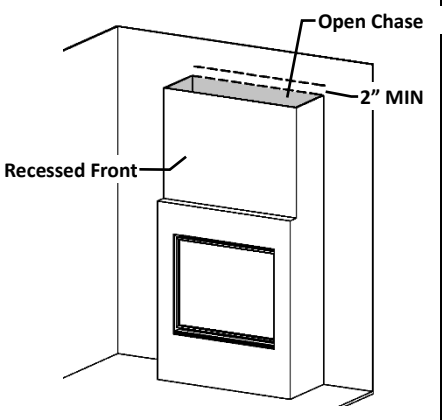

ZCV39 & ZCV42 Venting in the Chase - Warning - Venting Must Not Impede Air Flow in the Enclosure

A minor offset to avoid studs or joists is allowed. 1” clearance to combustibles must be maintained.

Horizontal Venting – Exit the Enclosure through the back wall directly above the flue. Use a Wall Thimble to protect combustibles. **DO NOT RUN HORIZONTAL VENTING INSIDE THE ENCLOSURE.**

Vertical Venting – Exit the Enclosure before any major offsets are made (see below). A Firestop or Attic Insulation Shield must be used on the underside of the top of the Enclosure.

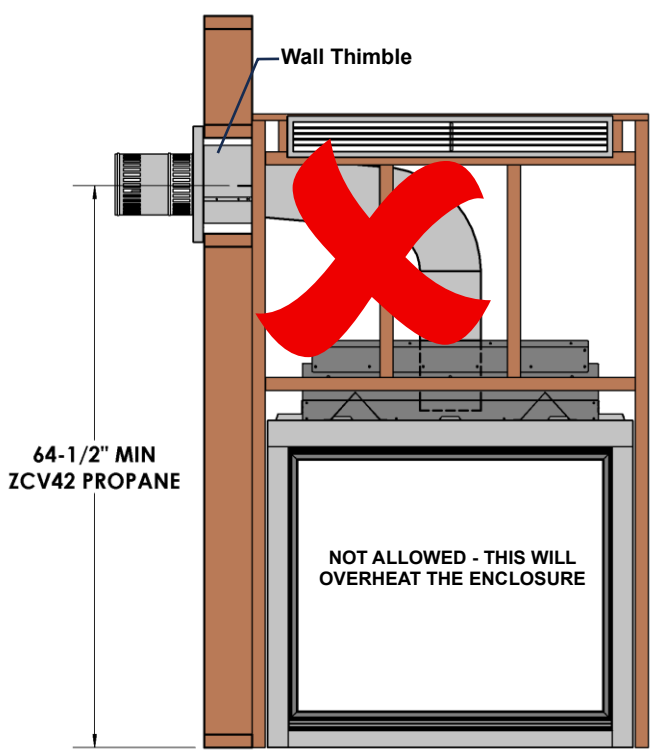

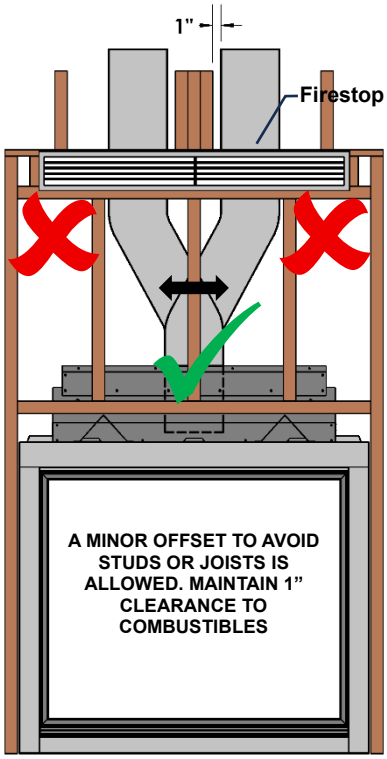

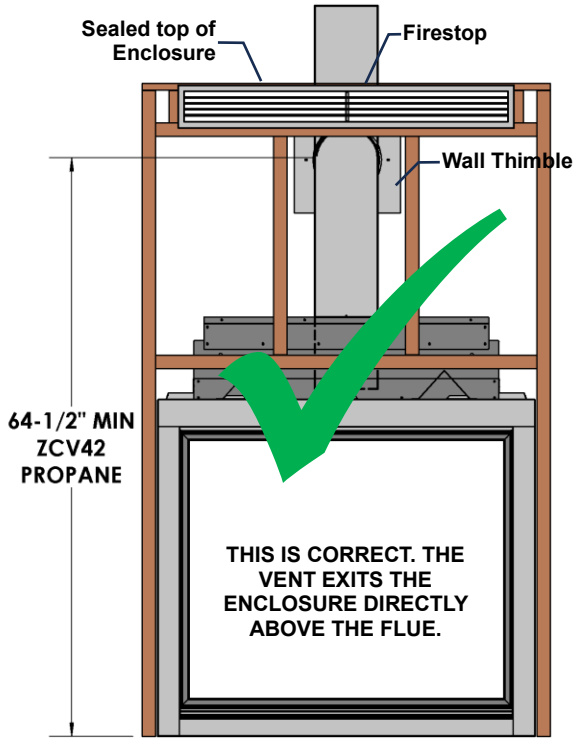

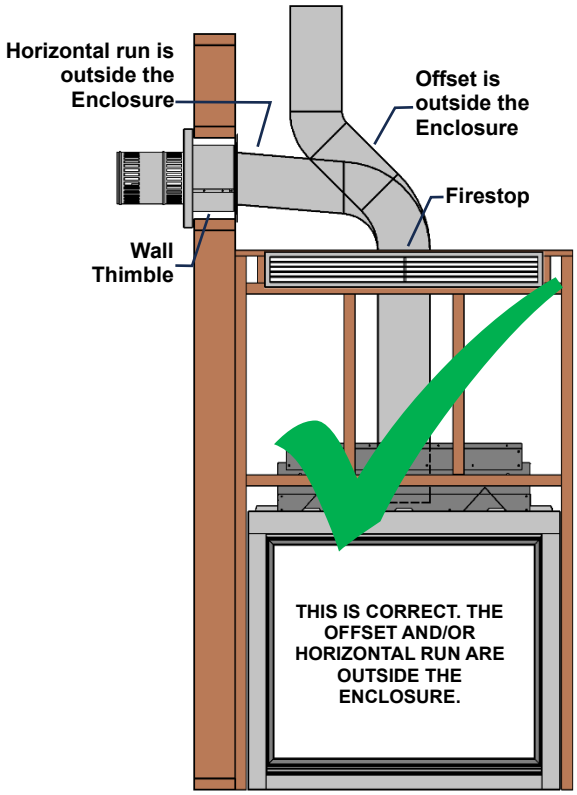

ZCV39 / 42 – Vented Chase Requirements

⚠ HEAT CANNOT BE DISCHARGED INTO THE WALLS, FLOOR, OR CEILING.

- Heat must exit through the required vented chase opening near the ceiling.
- The top of the enclosure must be sealed.
- Grill openings must be within 3/4" of enclosure top.
- An open chase must have a minimum 2" opening on 3 sides of the enclosure.

⚠ If using insulation in vented chase (i.e. for outside wall), wall board / drywall is required to support all insulation. Vented chase must be clean and free of all debris (i.e. loose insulation, pieces of wood, etc.)

ELECTRICAL WIRES IN CHASE MUST BE PROPERLY ATTACHED TO INSIDE WALL OF CHASE.

Please follow the current CSA C22.1 Canadian Electrical Code or the National Electrical Code; ANSI/NFPA 70 when installed in the United States.

ZCV39 / 42 -Vented Chase- Removal of Vent Covers- See Vented Chase Framing

⚠ CAUTION: IF VENTILATION PLATES ARE REMOVED, YOU MUST VENT THE CHASE!

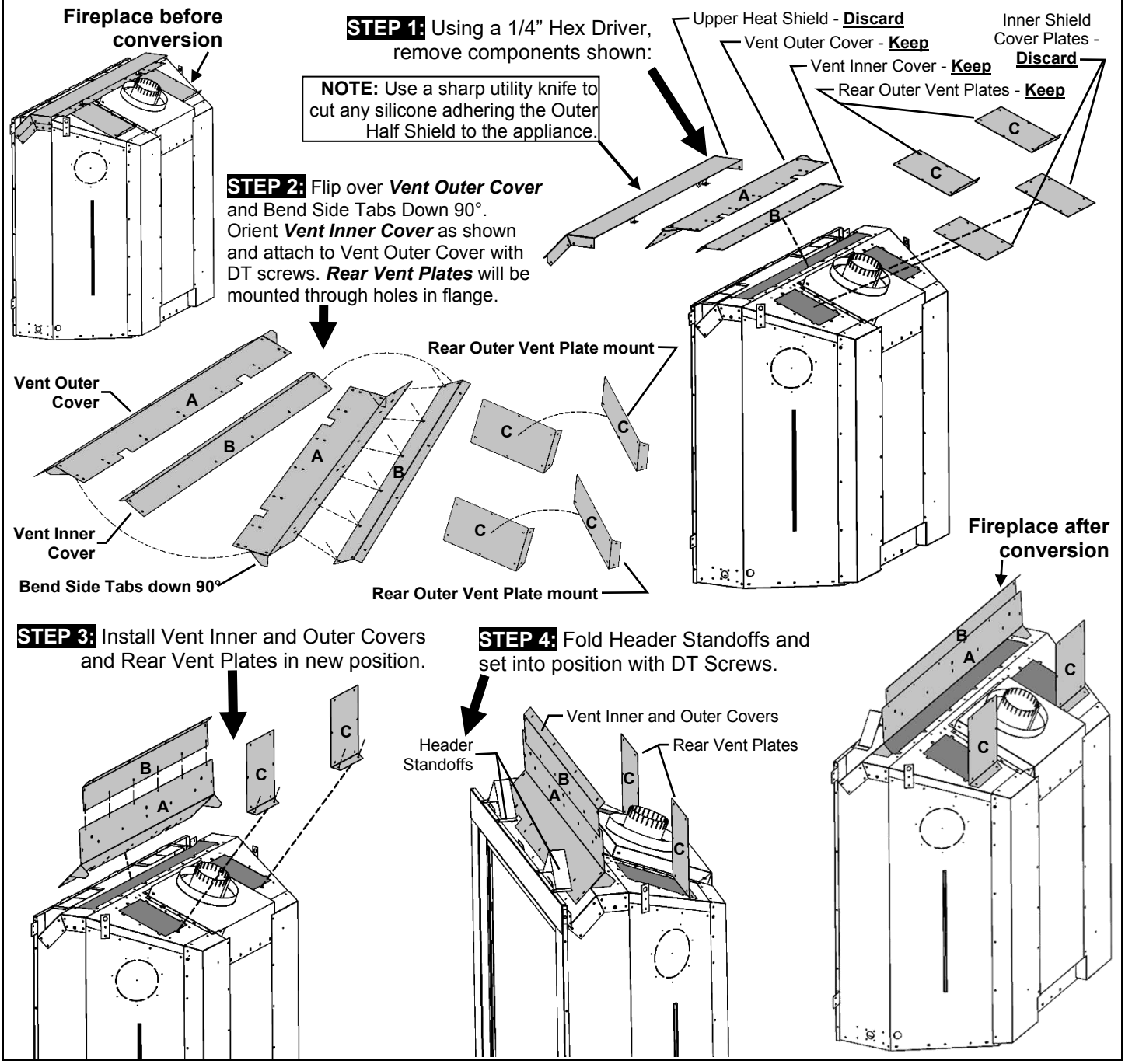

V39EG Grill Installation for ZCV39 / 42 Vented Chase -Option-

Ventilation Plates must be removed before installation into a Vented Chase

⚠ **Grill openings must be within 3/4" of enclosure top. This is to prevent excess heat from becoming trapped in the top of the chase. See Framing section of manual.**

Parts List:

[1] Louver Grill (ready to paint)

This Grill Meets Minimum Opening Air Free Requirements.

Required Opening Dimensions: 36-1/2" wide x 3-5/8" tall x 1-3/4" deep.

Outer Trim Dimensions: 37-1/2" wide x 4-13/16" tall.

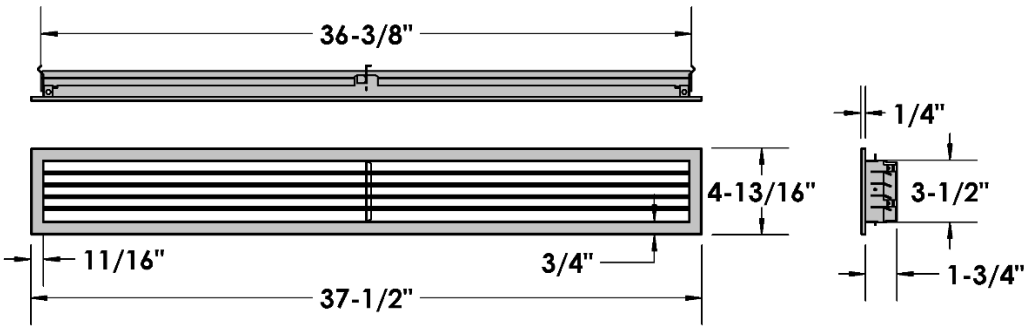

-Remove Ventilation Plates-
See ***Removal of Vent Covers*** section.

Installation: Insert Grill into opening and fasten to framing with a wood screw at each end.

TOP VIEW

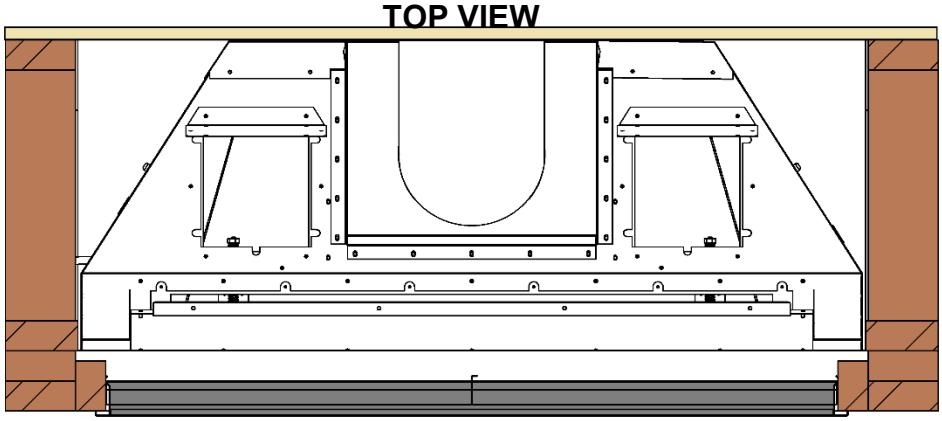

Grill opening must be flush within 3/4" of enclosure top.

SIDE VIEW

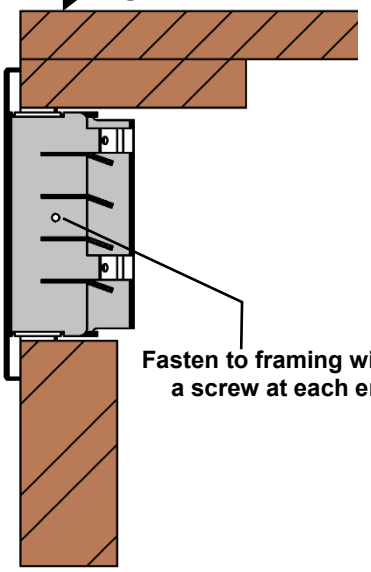

Fasten to framing with a screw at each end

Required opening: 36-1/2" x 3-5/8"

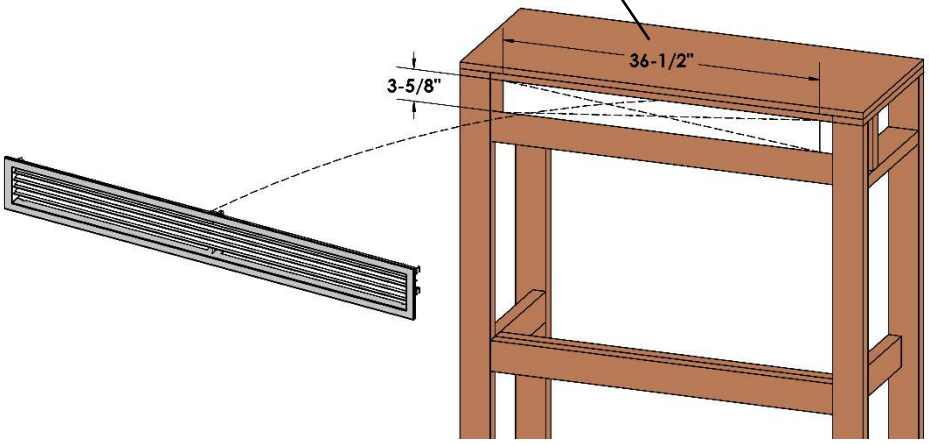

V39EGS Side Grill Installation for ZCV39 / 42 Vented Chase -Option-

Ventilation Plates must be removed before installation into a Vented Chase

⚠ **Grill openings must be within 3/4" of enclosure top. This is to prevent excess heat from becoming trapped in the top of the chase. See Framing section of manual.**

Parts List:
[Qty 2] Side Grill assemblies (ready to paint)

Grills must be installed on both sides of chase.
Required Opening Dimensions: 12-1/2" wide x 6-1/8" tall
Outer Trim Dimensions: 13-1/2" wide x 7-3/8" tall

-Remove Ventilation Plates-
See ***Removal of Vent Covers*** section.

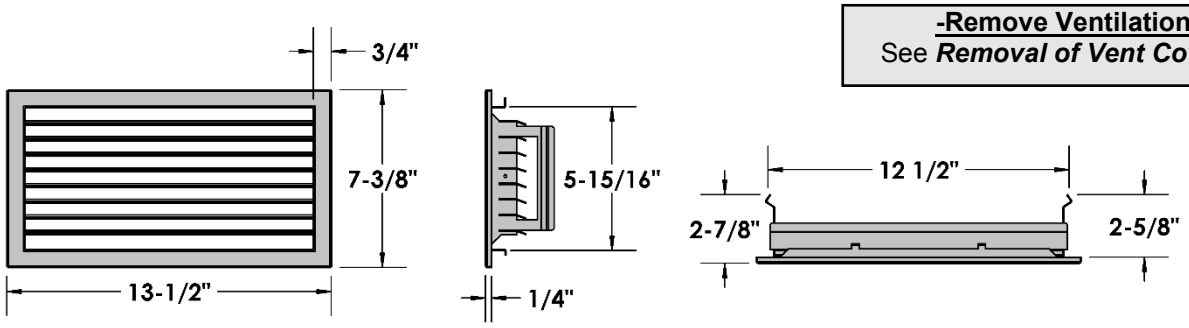

Installation: Insert Grills into openings and fasten to framing with a wood screw at each end.

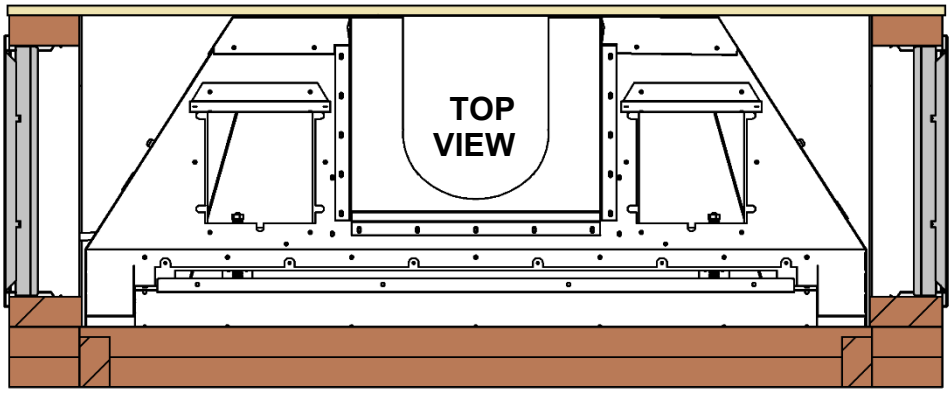

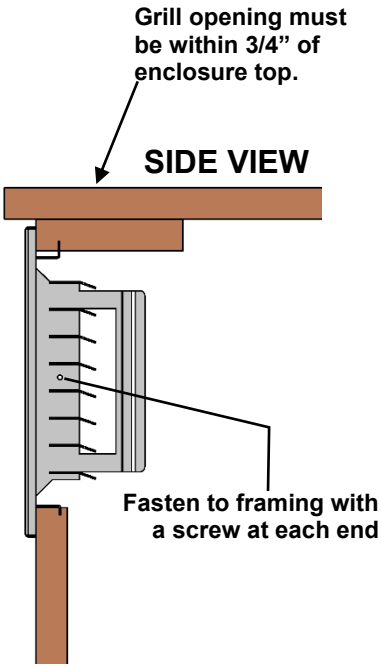

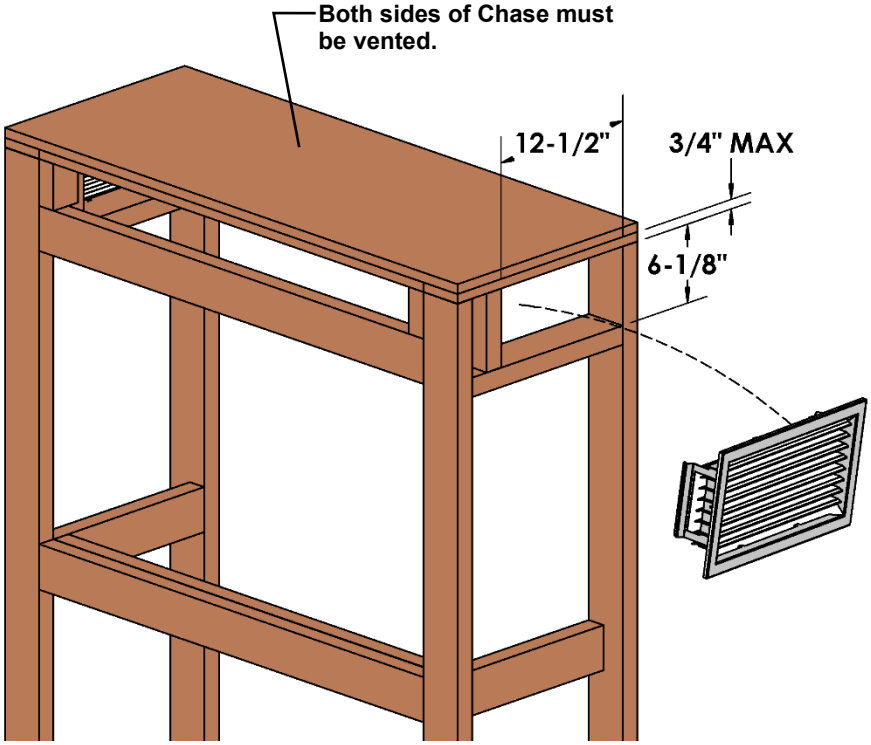

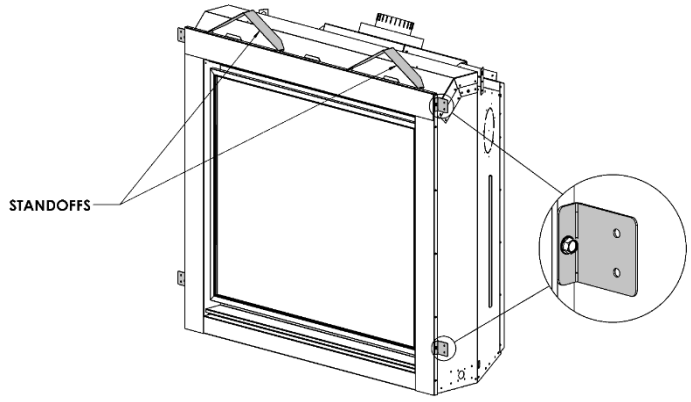

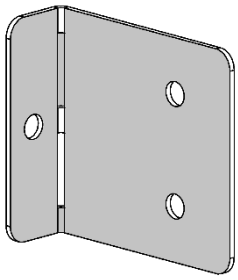

[Qty]2 Nailing Tabs are located on each side of the front frame.

These Nailing Tabs can be used in two ways:

1/2" Drywall Flush with Face of Fireplace – Fireplace and Combustible Wall to be covered with a surround or Non-Combustible Materials (e.g. Stone around Fireplace).

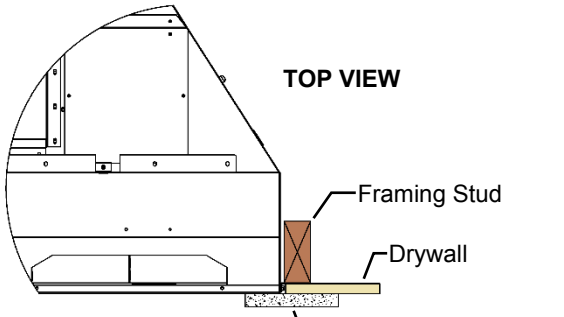

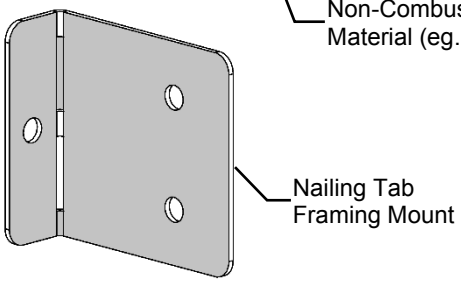

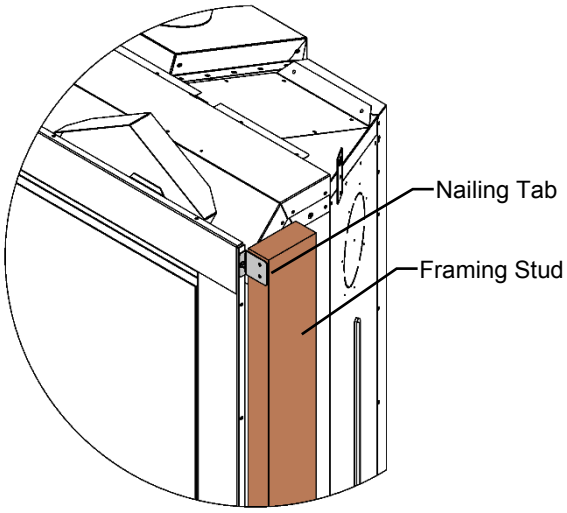

Framing Flush with Face of Fireplace -Fireplace to be covered with Non-Combustibles (e.g. Concrete Board) for **Flat Wall** appearance.

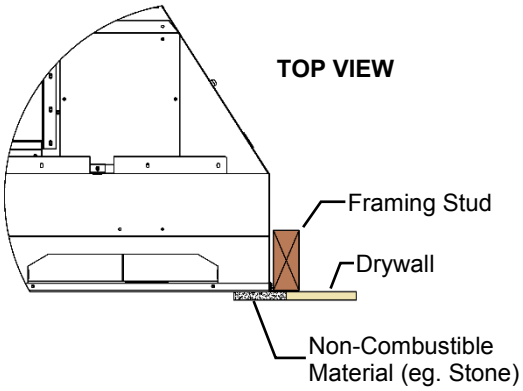

Nailing Tabs Must Be Rotated 180° And Folded Back onto Framing Stud.

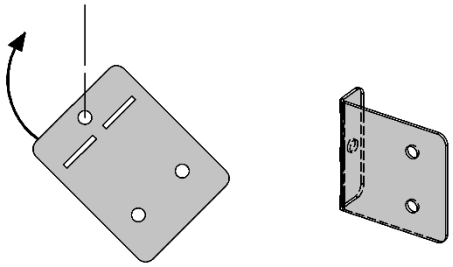

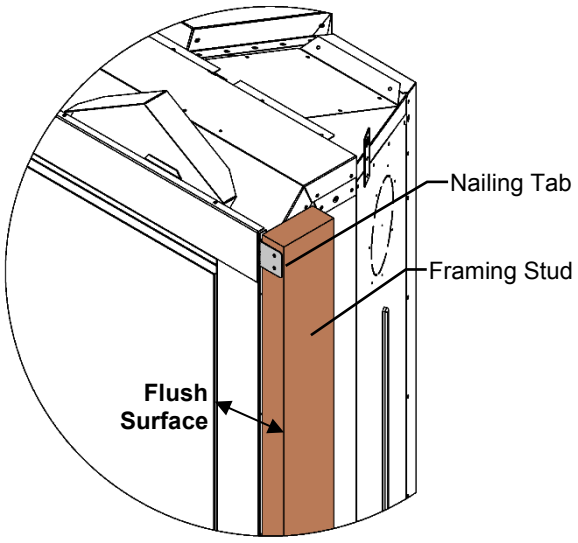

ZCV39 Locating Your Appliance

LOCATION KEY:

A. Flat on Wall

B. Across the Corner

C. As an Island*

D. As a Room Divider*

E. Flat on Wall Corner

F. Exterior Wall

See Mantel Leg Clearances Instruction for the proper placement of fireplace.

*Island installation with a top vent is possible as long as the horizontal portion of the vent system does not exceed 20 feet (6.1 m).

***NOTE:** Horizontal vent runs and offsets are not allowed inside the enclosure.

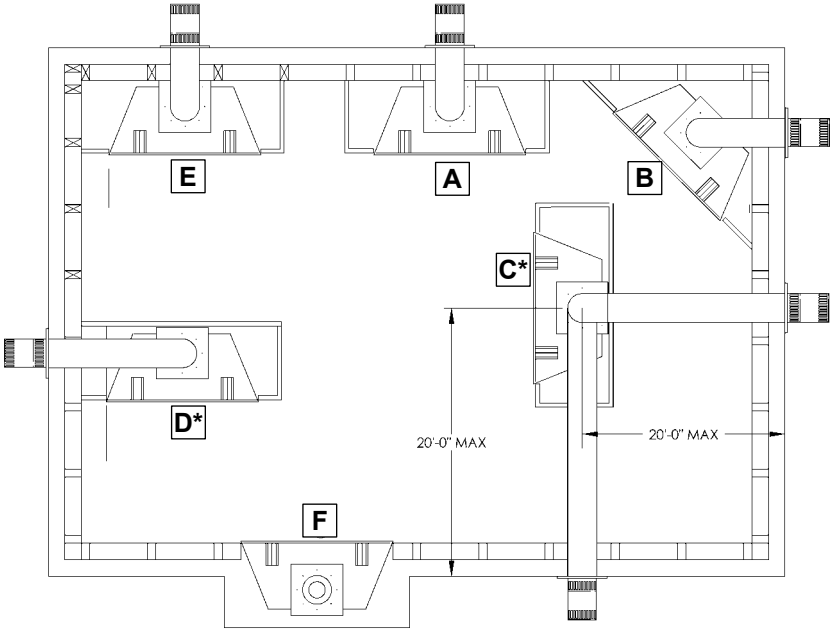

ZCV39 Fireplace Dimensions

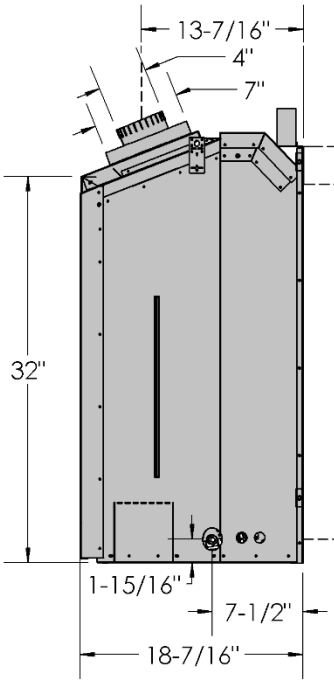

LEFT SIDE

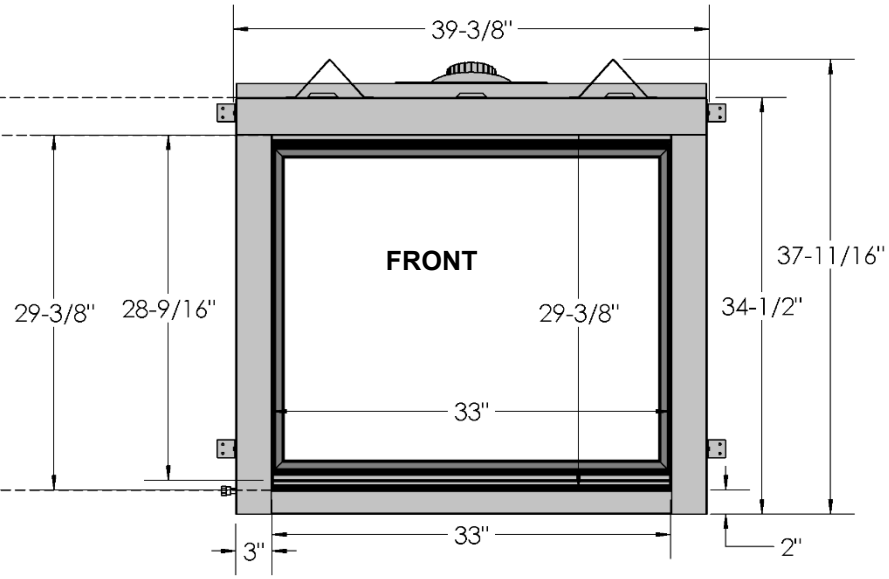

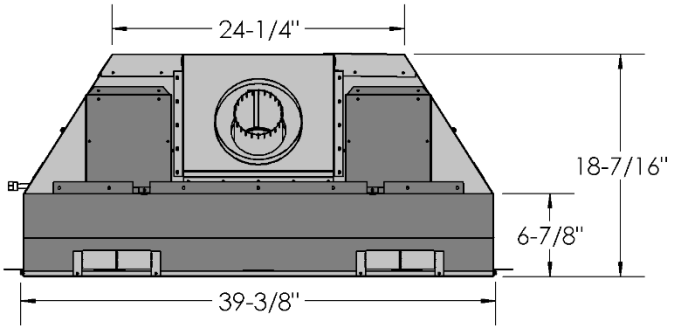

TOP

ZCV39 Framing Dimensions for Non-Vented Chase
Fireplace is installed As Shipped, with Ventilation Plates in place.

Determine whether face of fireplace will be:

- Flush with finished wall (e.g., for surround, cultured stone, or other noncombustible covering).
- Flush with framing (to be covered with concrete board for a Flat Wall appearance).

Refer to Nailing Tab Guide section also. **These structures are not load bearing.**

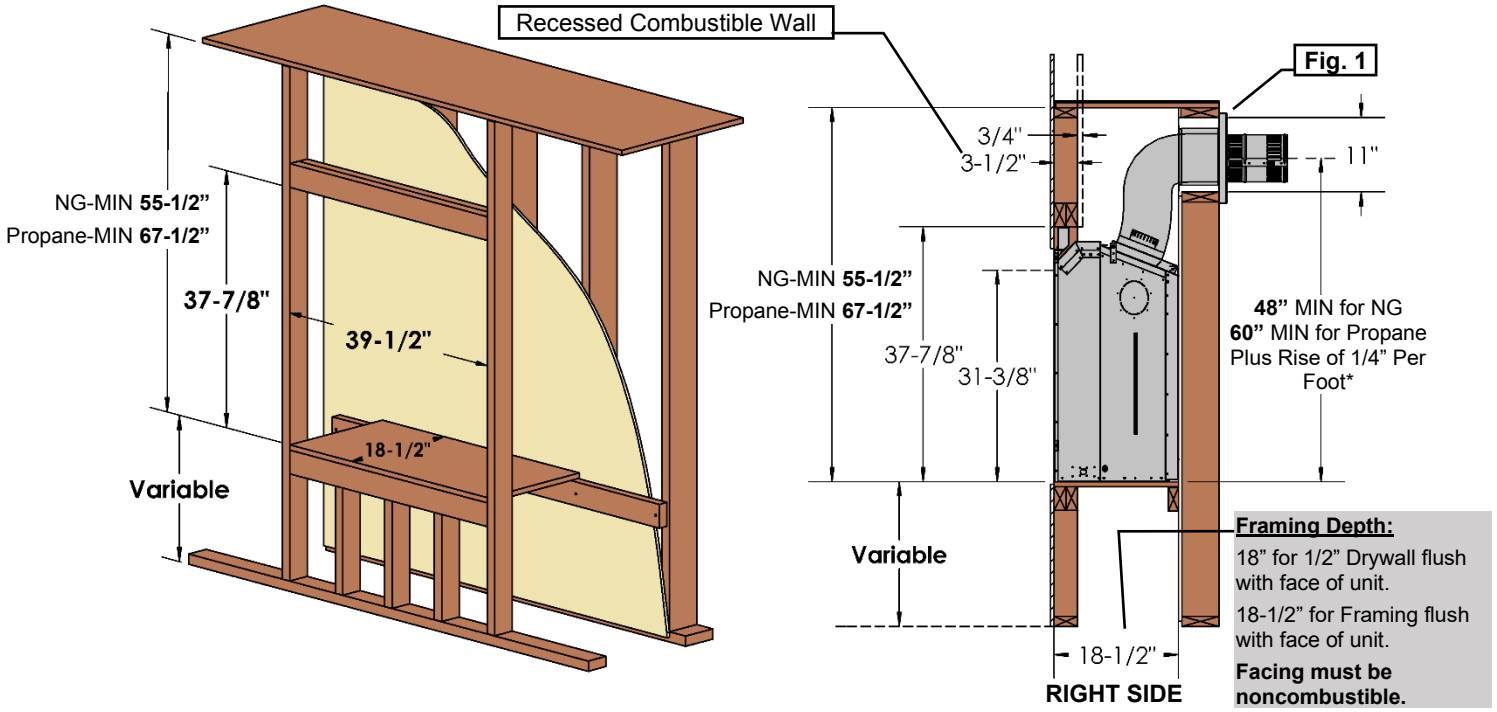

***For Propane Horizontal installations the venting must be an additional one foot above the minimum vertical rise off the flue before going horizontal.**

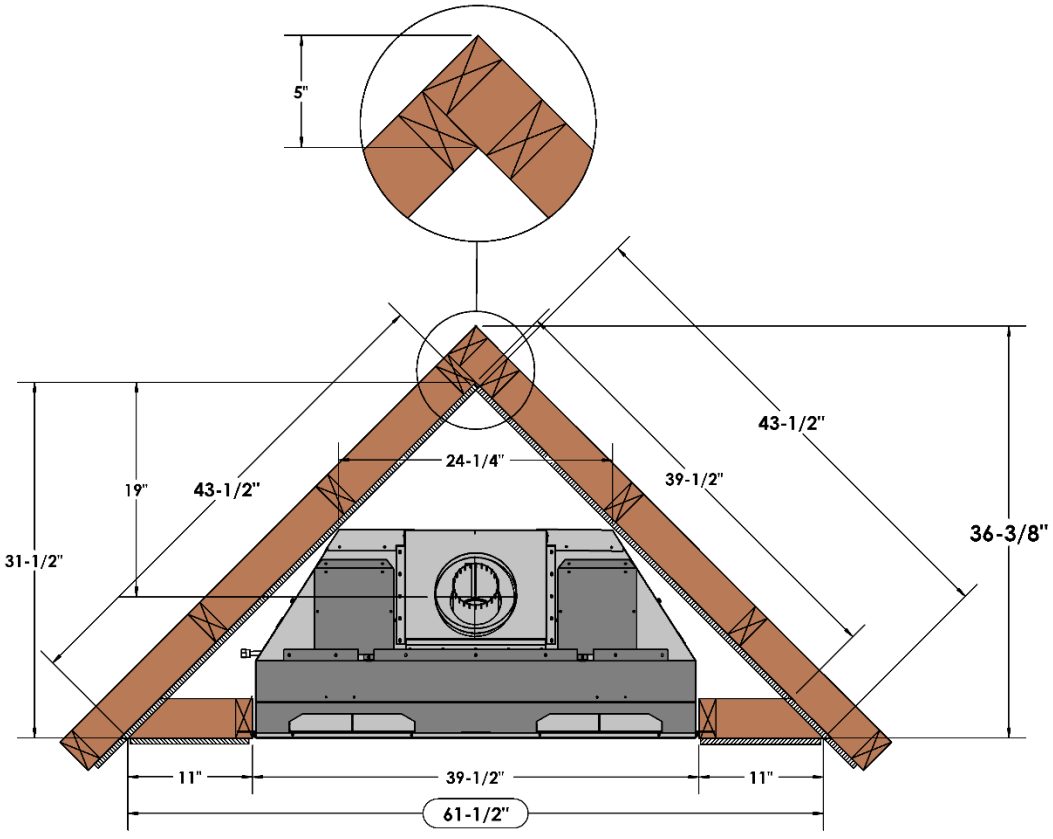

Fig.1
Framing for Horizontal Vent Termination
(See **Installation of Side Wall Venting** Section)

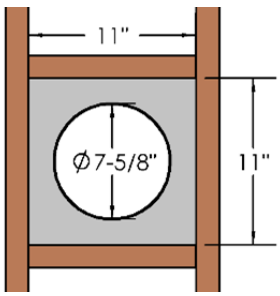

Vertical Venting MUST maintain 1" clearance to combustibles.

ZCV39 Framing Dimensions for Non-Vented Chase Built Outside of Room
Fireplace is installed As Shipped, with Ventilation Plates in place.

Determine whether face of fireplace will be flush with framing or finished wall.

Refer to Nailing Tab Guide also. **NOTE:** These structures are not load bearing.

No loose Combustibles (wood, wiring, etc.) are allowed inside the Chase area.

Chase built outside of room (Doghouse)

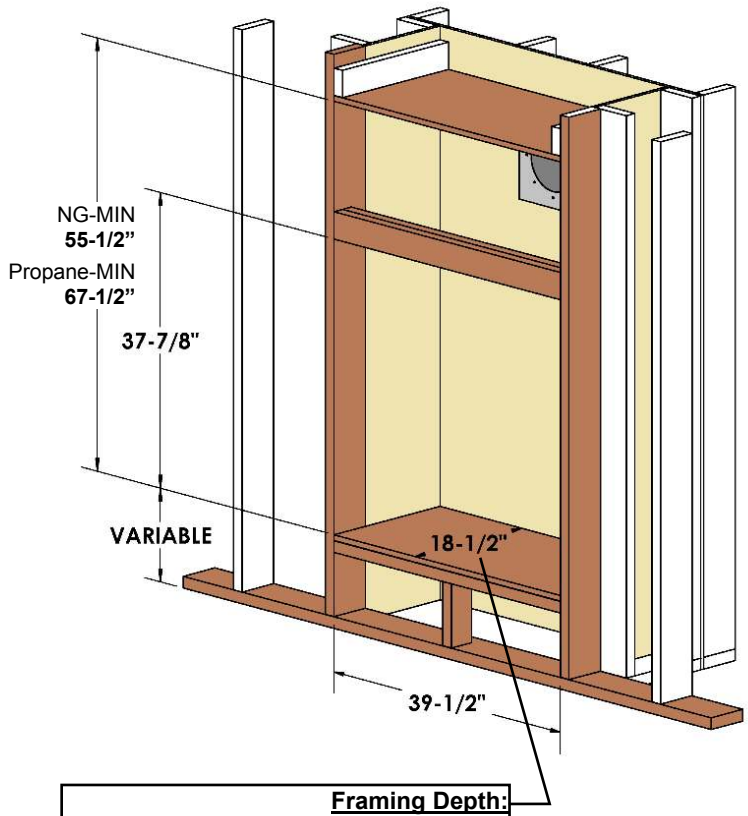

Framing Depth:
18” for 1/2” Drywall flush with face of unit.
18-1/2” for Framing flush with face of unit.
Facing must be noncombustible.

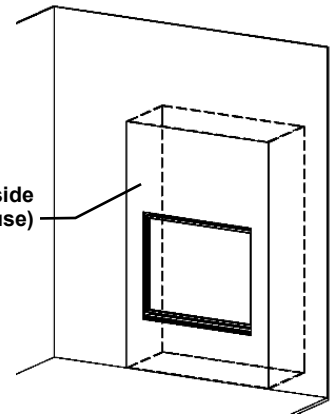

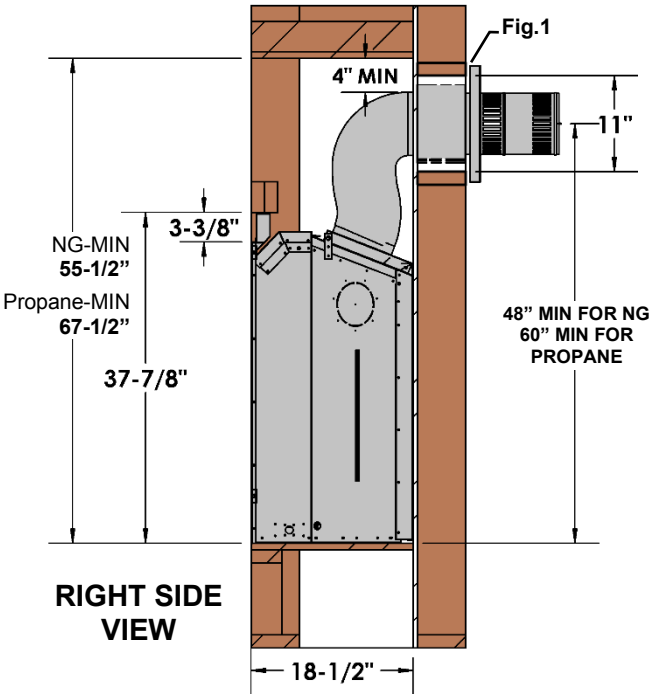

RIGHT SIDE VIEW

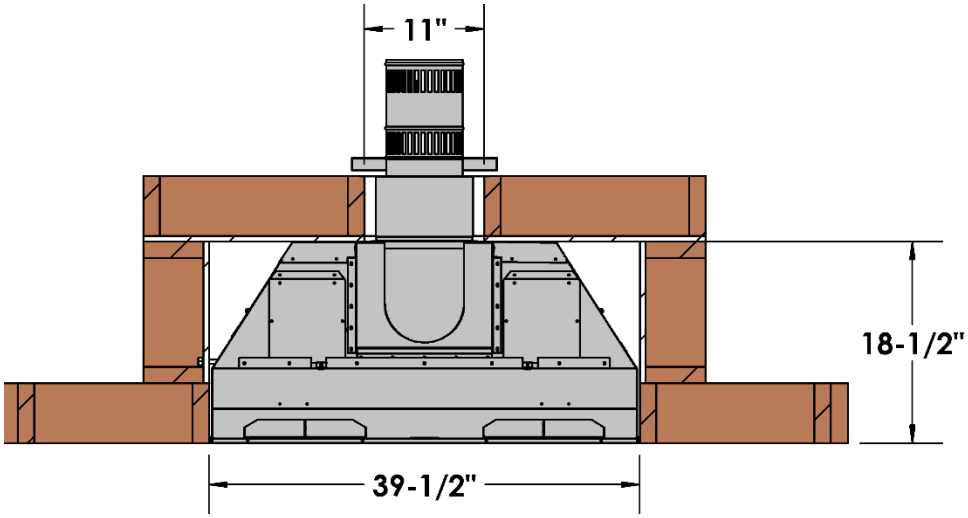

TOP VIEW

Fig.1
Framing for Horizontal Vent Termination
(See **Installation of Side Wall Venting** Section)

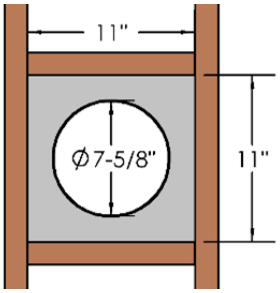

Vertical Venting MUST maintain 1” clearance to combustibles.

39ZCV Mantel Clearances for Non-Vented Chase
Fireplace is installed As Shipped, with Ventilation Plates in place.

Before installing any mantels, it is important to determine the combustibility of its material(s). There are two types of mantels to consider: Combustible and Non-Combustible.

A **Combustible Mantel** is one that consists of material(s) that may discolor, combust, or lose its integrity in the presence of heat. These types of mantels must strictly conform to the dimensional requirements shown.

Conversely, a **Non-Combustible Mantel** is one that is constructed with material(s) that will not combust. Check your local codes and regulations to determine whether your mantel is combustible or Non-Combustible.

The advantage to Non-Combustible Mantels is that it may extend right up to the tile lip of the fireplace. Combustible mantels must adhere to the dimensional restrictions shown.

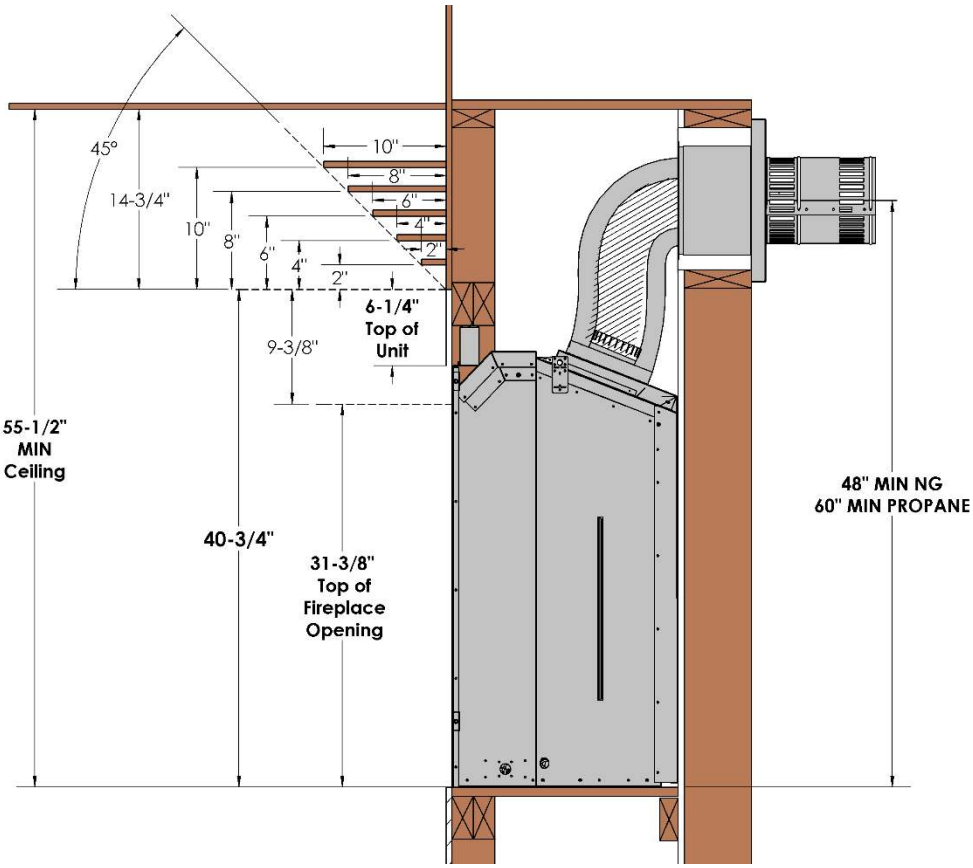

Mantel Dimensions are from front face or Non-Combustible Facing Materials covering fireplace.

⚠-Combustible Objects on Non-Combustible Mantel Warning-
Combustible objects must not be placed on a Non-combustible Mantel unless the mantel meets the dimensional requirements for a Combustible Mantel. Determine whether your mantel conforms to the requirements of a Combustible Mantel.

- Mantel Leg Clearances -

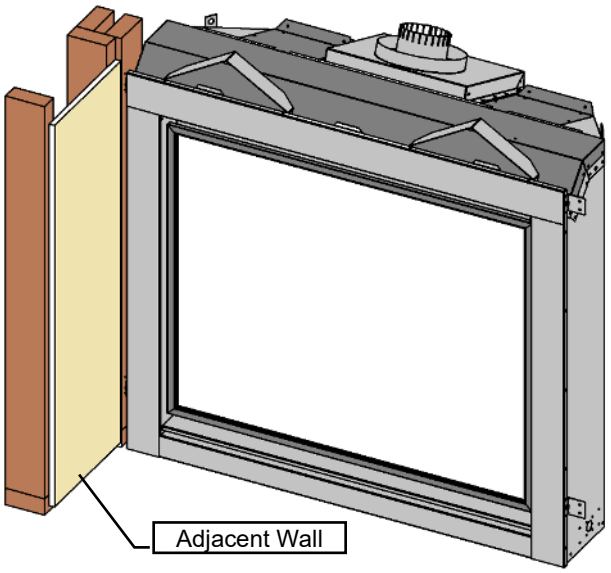

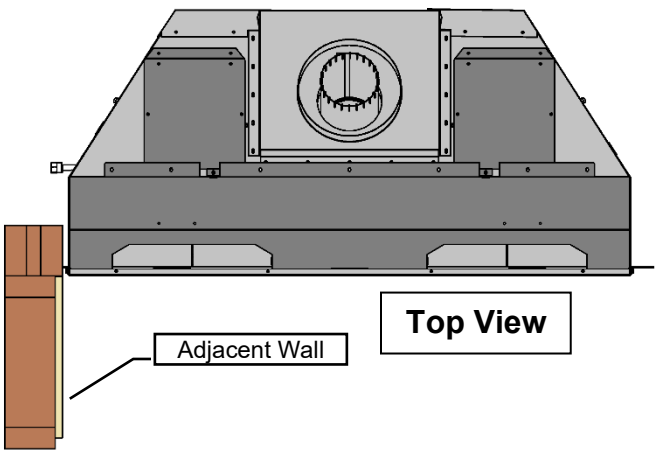

Top View

ZCV39 Clearance to Combustibles for Non-Vented Chase

Fireplace is installed As Shipped, with Ventilation Plates in place.

Clearance to Combustibles	ZCV39
Front	36” [92cm]
Back (from Stand-offs)	0” [0cm]
Side (from Stand-offs)	0” [0cm]
Floor*	0” [0cm]
Minimum Ceiling Height (from bottom of fireplace)	55-1/2” [141cm]
Top (from Stand-offs)	0” [0cm]
Top of 90° Bend in minimum Enclosure of 55-1/2”	4” [10.2cm]
Top of 90° Bend in Enclosure over 55-1/2”	4” [10.2cm]
VENTING SYSTEMS	
Top of Horizontal Pipe	1/1/2” [3.8cm]
Side & Bottom of Horizontal Pipe	1” [2.5cm] All Vent Systems
Vertical Vent Pipe	1” [2.5cm] All Vent Systems

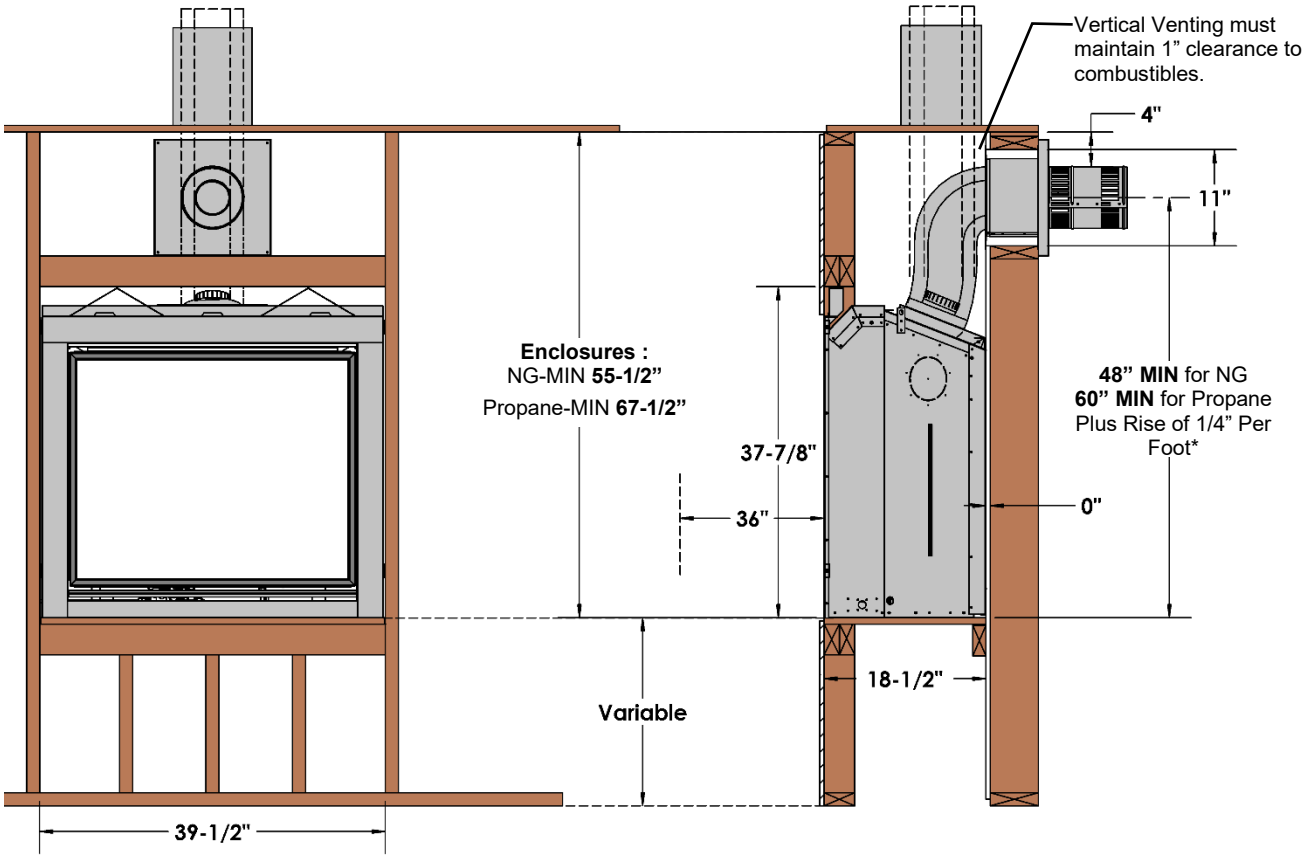

*Note: If appliance is installed directly on carpeting or other combustible material other than wood flooring, a metal or wood panel extending the full width and depth of the appliance must be used. Carpet may extend 1 inch above the floor of the appliance.

Vinyl Flooring- Luxury Vinyl Plank (LVP), Luxury Vinyl Tile (LVT), and other vinyl flooring can be sensitive to radiant heat and changes in temperature. We recommend a minimum 12-inch hearth should be installed, or the fireplace should be raised at least 24 inches above the floor. **The use of vinyl flooring is done at the installer’s risk.**

ZCV39 Facing Requirements for Non-Vented Chase
Fireplace is installed As Shipped, with Ventilation Plates in place.

Required:
ANY MATERIALS COVERING THE FACE OF THE FIREPLACE MUST BE NON-COMBUSTIBLE (i.e. brick, stone, tile, concrete board).

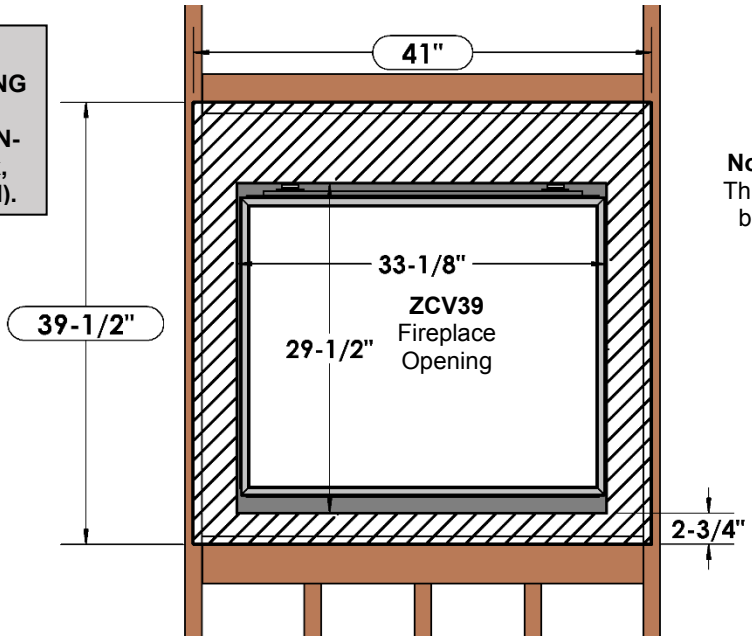

Recommended:
Non-Combustible 39-1/2" x 41"
This is to allow concrete board to be screwed to framing if used.

Note: Do not drive excessively long screws into the face of the unit as internal parts may be damaged.

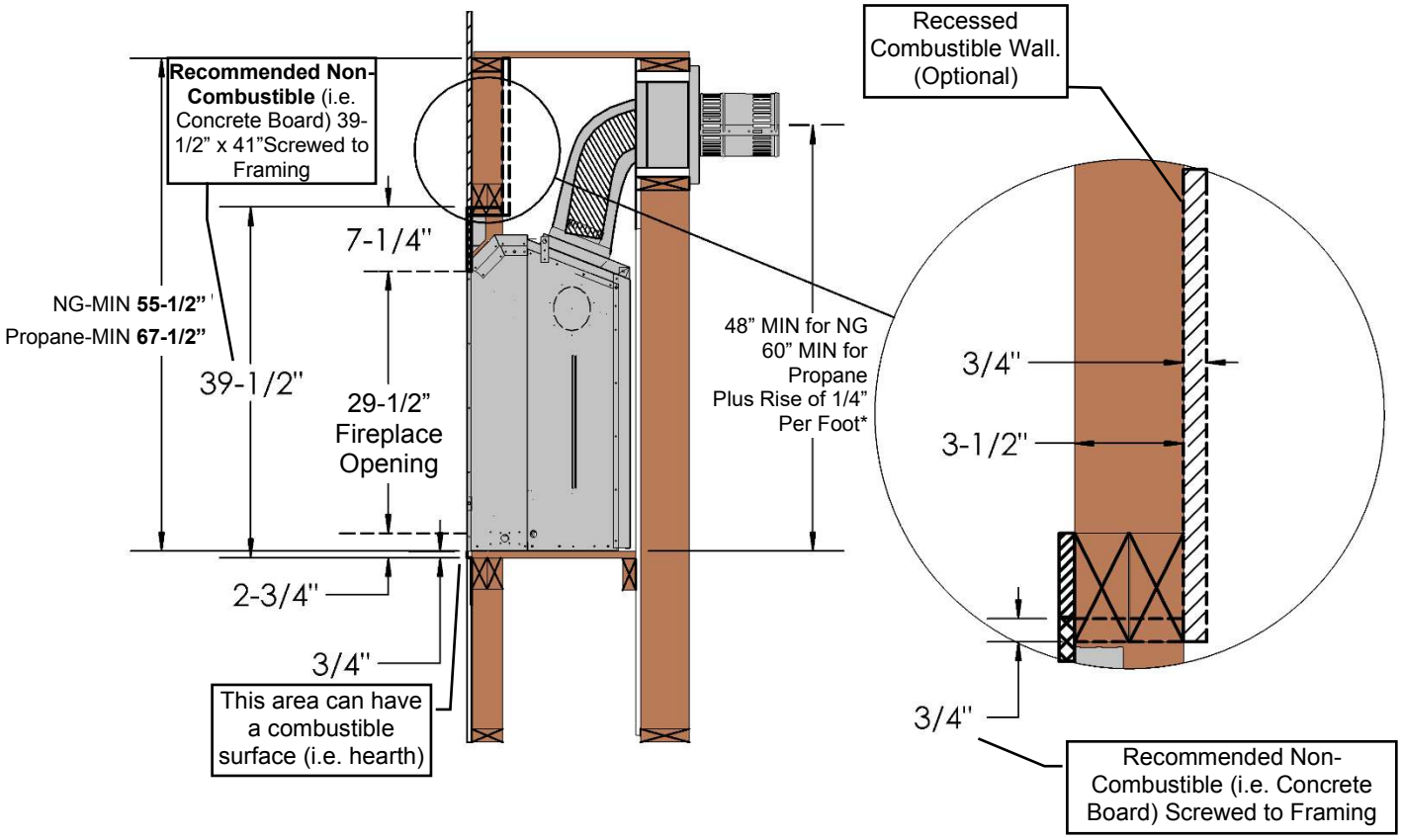

ZCV39 Framing Dimensions for Vented Chase (built outside of room) V39EG Grill

Ventilation Plates must be removed before installation into a Vented Chase

Grill **MUST** be located at top of chase. Determine whether face of fireplace will be flush with framing or finished wall. Refer to Nailing Tab Guide also. **NOTE:** These structures are not load-bearing.

No loose Combustibles (wood, wiring, etc.) are allowed inside the Chase area.

-Remove Ventilation Plates-
See ***Removal of Vent Covers*** section.

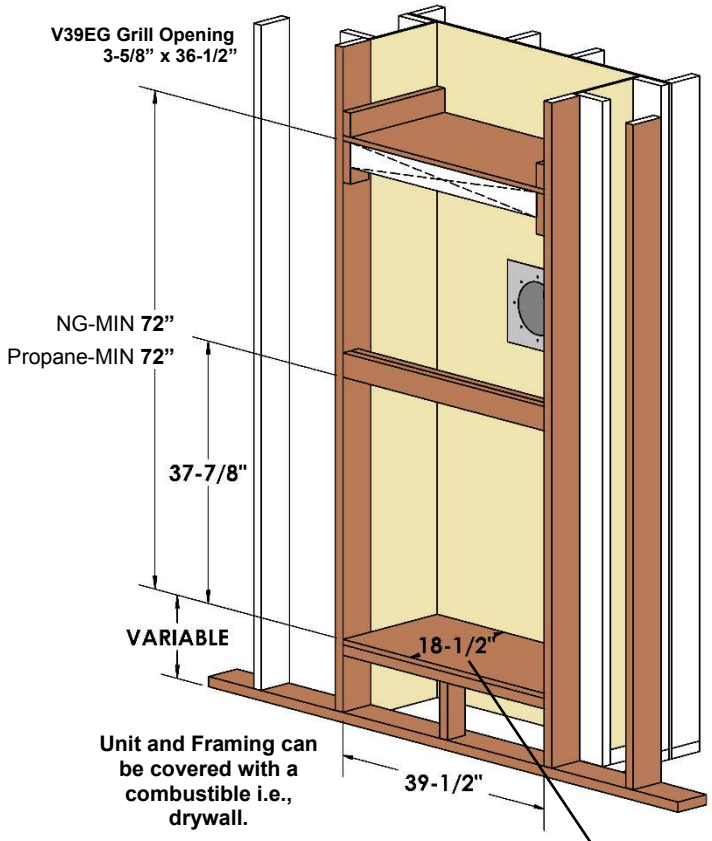

Framing Depth:
18" for 1/2" Drywall flush with face of unit.
18-1/2" for Framing flush with face of unit.

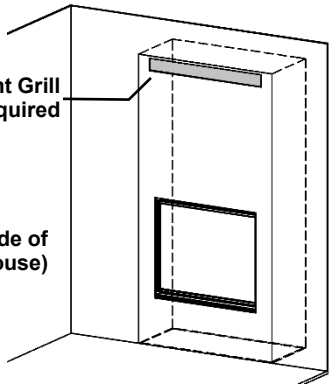

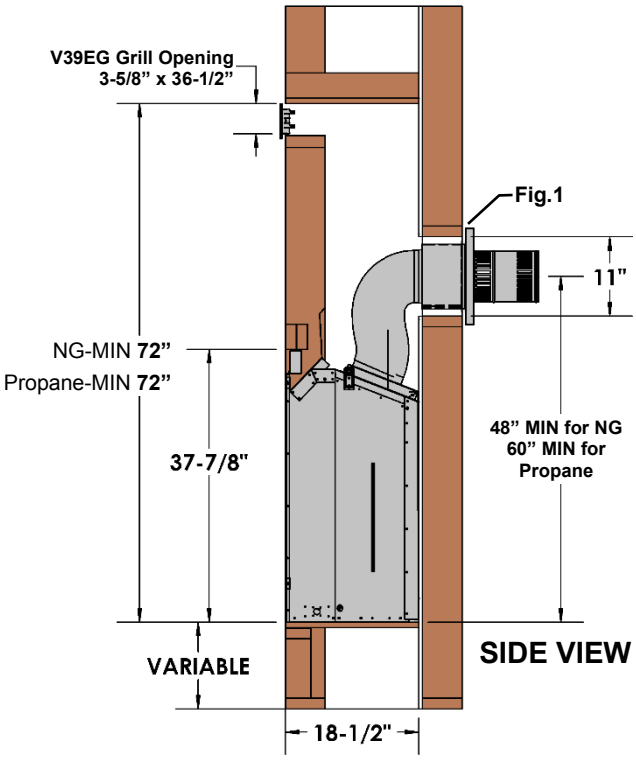

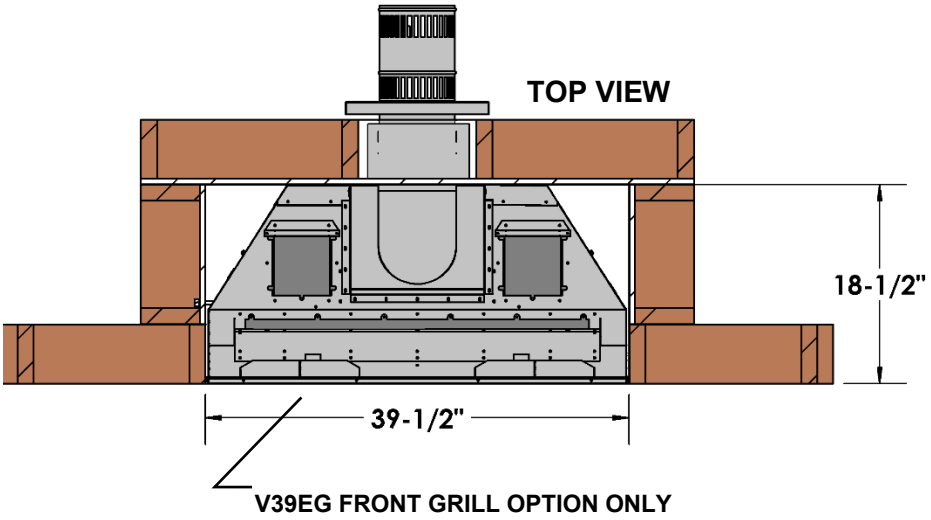

Fig.1
Framing for Horizontal Vent Termination
(See **Installation of Side Wall Venting** Section)

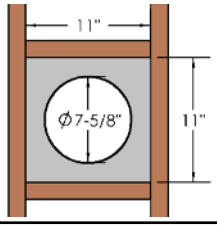

Vertical Venting MUST maintain 1" clearance to combustibles.

ZCV39 Framing Dimensions for Vented Chase with V39EG -OR- V39EGS Grills

Ventilation Plates must be removed before installation into a Vented Chase

Grills **MUST** be located at top of chase. Determine whether face of fireplace will be flush with framing or finished wall. Refer to Nailing Tab Guide also. **NOTE:** These structures are not load bearing.

No loose Combustibles (wood, wiring, etc.) are allowed inside the Chase area.

-Remove Ventilation Plates-
See ***Removal of Vent Covers*** section.

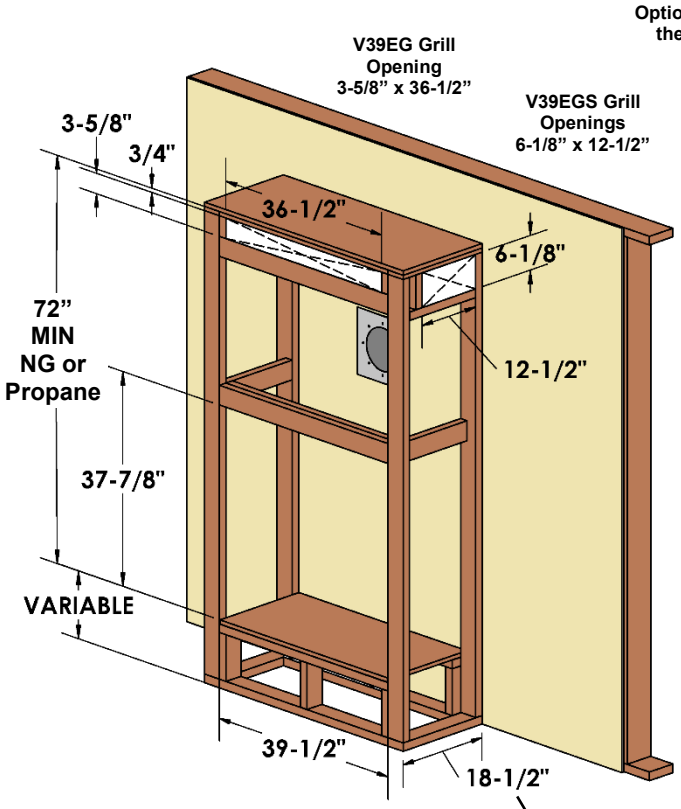

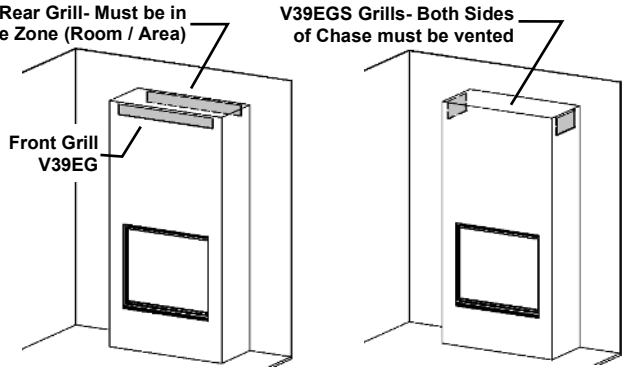

Framing Depth:

18" for 1/2" Drywall flush with face of unit.

18-1/2" for Framing flush with face of unit.

Unit and Framing can be covered with a combustible i.e., drywall.

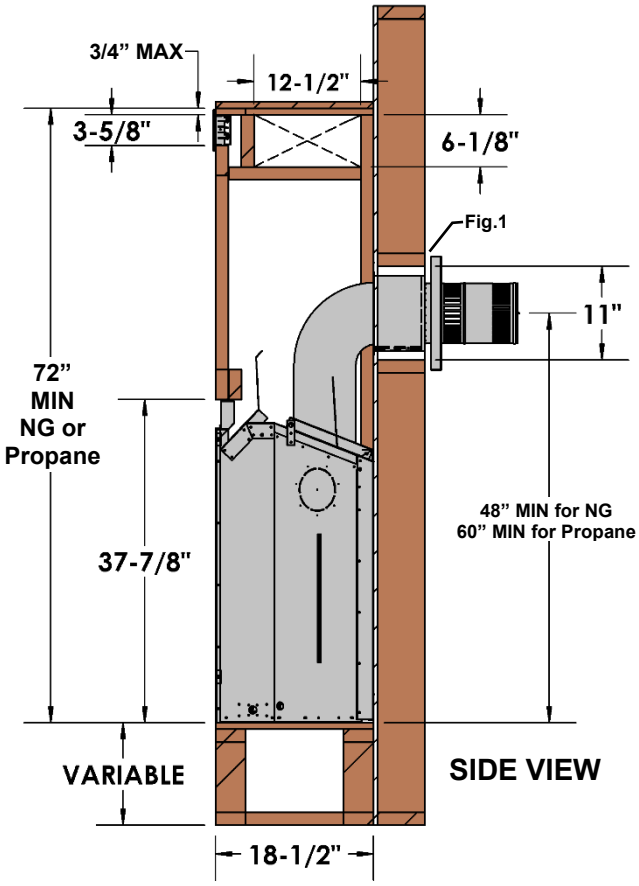

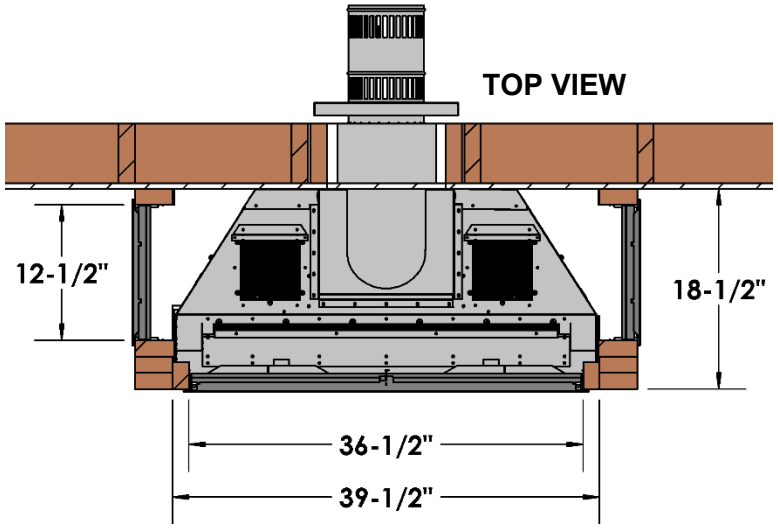

Fig.1
Framing for Horizontal Vent Termination
(See **Installation of Side Wall Venting** Section)

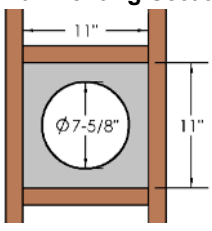

Vertical Venting MUST maintain 1" clearance to combustibles.

ZCV39 Framing Dimensions for Vented Chase with Open Top

Ventilation Plates must be removed before installation into a Vented Chase

Determine whether face of fireplace will be flush with framing or finished wall. Refer to Nailing Tab Guide also. **NOTE:** These structures are not load-bearing.

-Remove Ventilation Plates-
See ***Removal of Vent Covers*** section.

No loose Combustibles (wood, wiring, etc.) are allowed inside the Chase area.

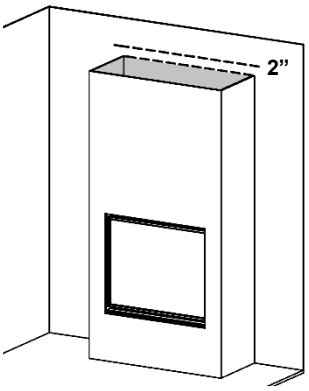

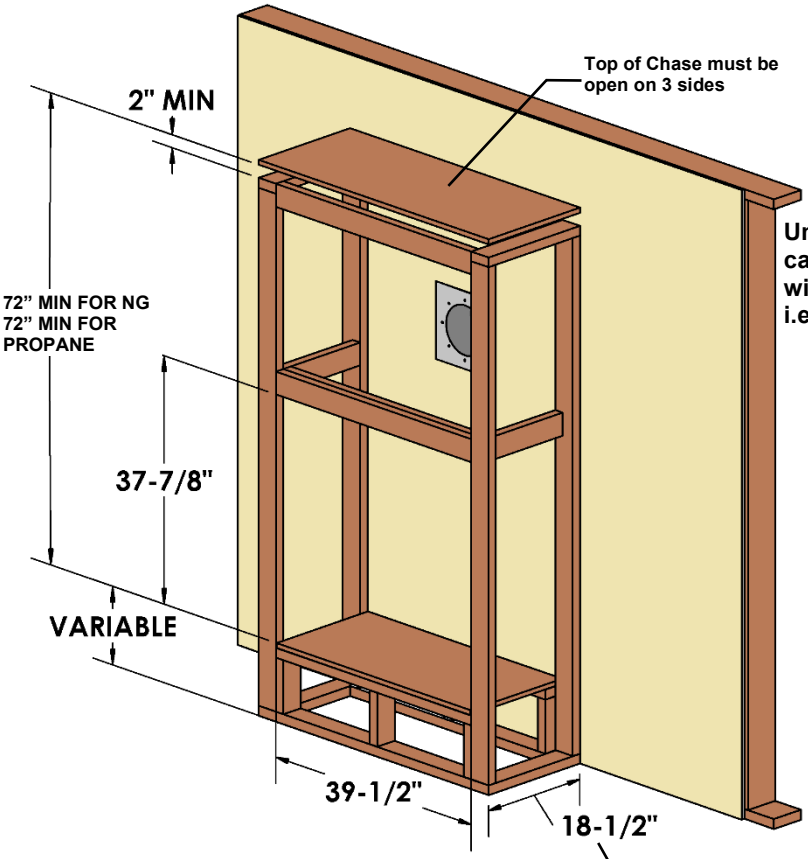

Unit and Framing can be covered with a combustible i.e., drywall.

Framing Depth:

18” for 1/2” Drywall flush with face of unit.

18-1/2” for Framing flush with face of unit.

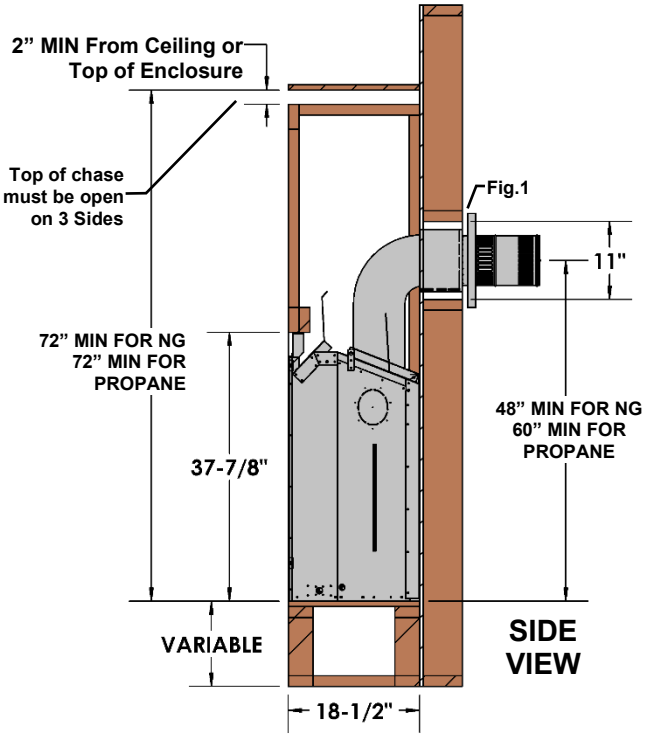

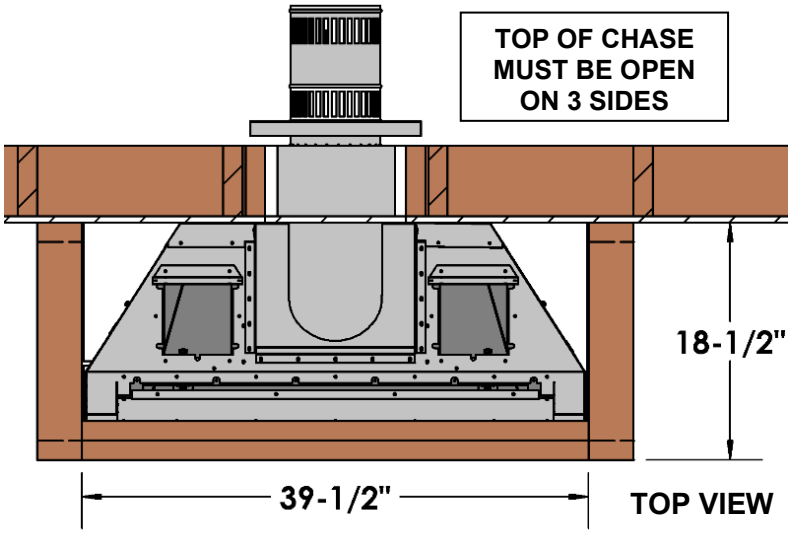

Fig.1
Framing for Horizontal Vent Termination
(See **Installation of Side Wall Venting** Section)

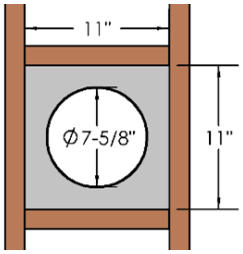

Vertical Venting MUST maintain 1” clearance to combustibles.

ZCV39 Framing Dimensions - Recessed Vented Chase - V39EG -OR- V39EGS Grills Ventilation Plates must be removed before installation into a Vented Chase

Grills **MUST** be located at top of chase. Determine whether face of fireplace will be flush with framing or finished wall. Refer to Nailing Tab Guide also. **NOTE:** These structures are not load-bearing.

-Remove Ventilation Plates-
See ***Removal of Vent Covers*** section.

No loose Combustibles (wood, wiring, etc.) are allowed inside the Chase area.

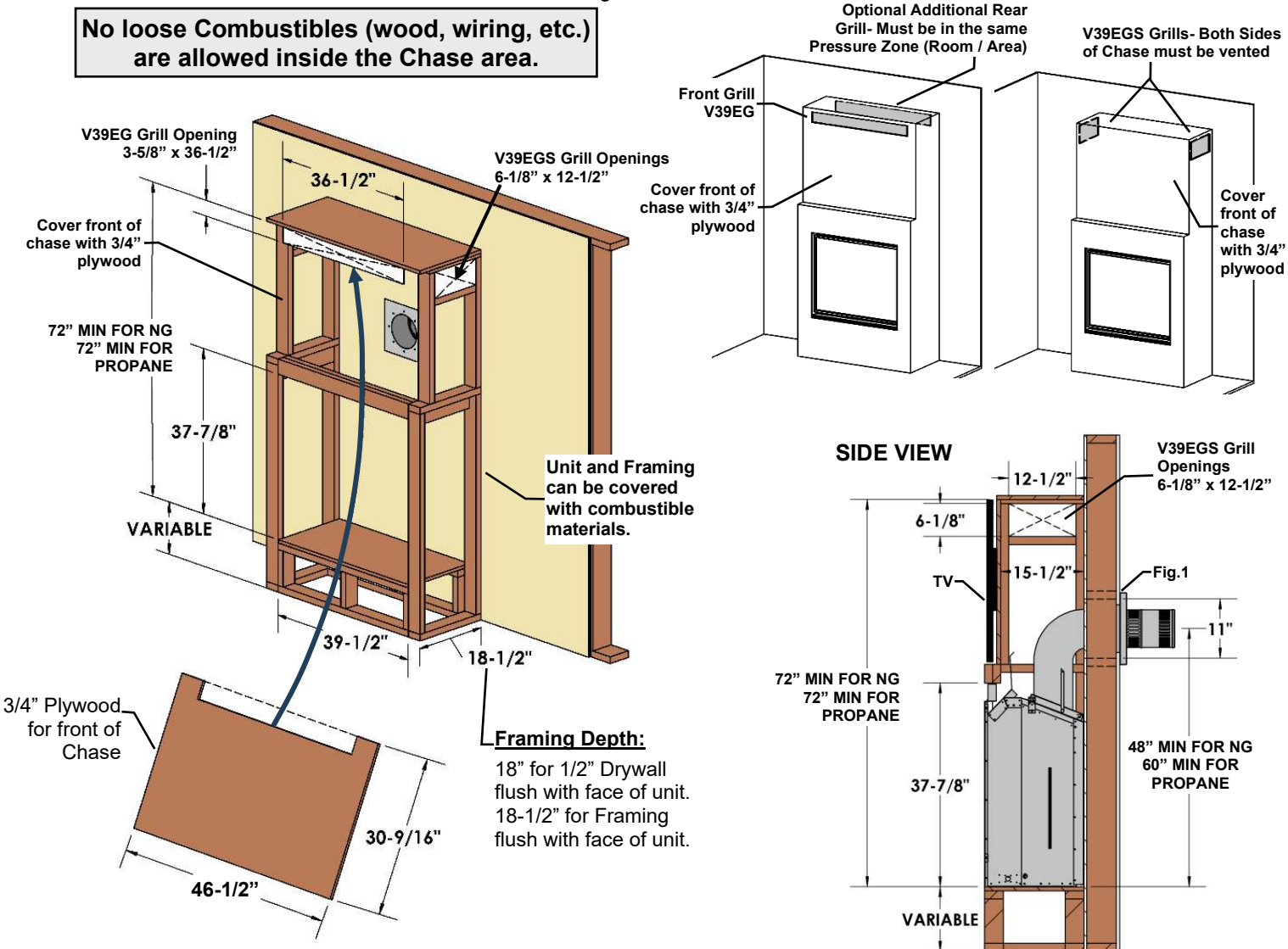

Framing Depth:

18" for 1/2" Drywall flush with face of unit.
18-1/2" for Framing flush with face of unit.

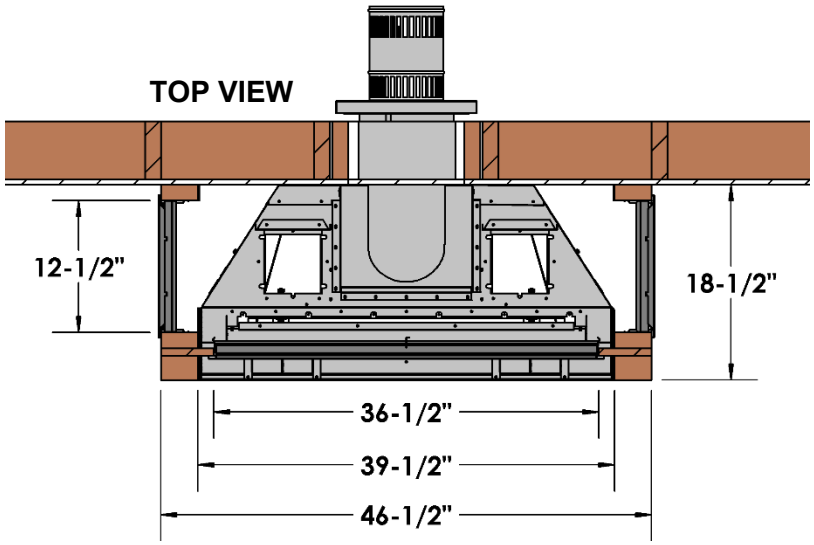

Fig.1
Framing for Horizontal Vent Termination
(See **Installation of Side Wall Venting** Section)

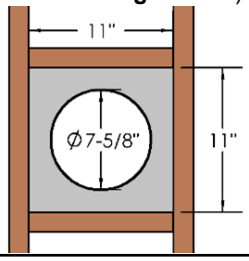

Vertical Venting MUST maintain 1" clearance to combustibles.

ZCV39 Framing Dimensions - Recessed Vented Chase with Open Top
Ventilation Plates must be removed before installation into a Vented Chase

Determine whether face of fireplace will be flush with framing or finished wall. Refer to Nailing Tab Guide also. **NOTE:** These structures are not load-bearing.

No loose Combustibles (wood, wiring, etc.) are allowed inside the Chase area.

-Remove Ventilation Plates-
See ***Removal of Vent Covers*** section.

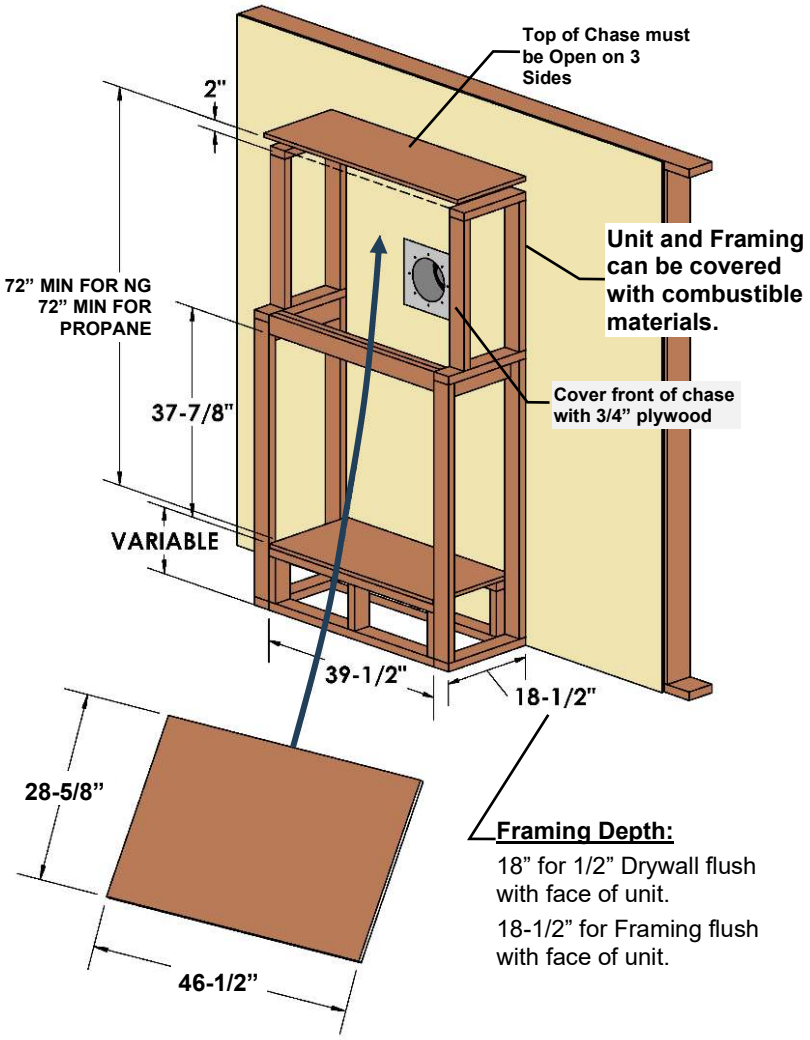

Framing Depth:

18" for 1/2" Drywall flush with face of unit.

18-1/2" for Framing flush with face of unit.

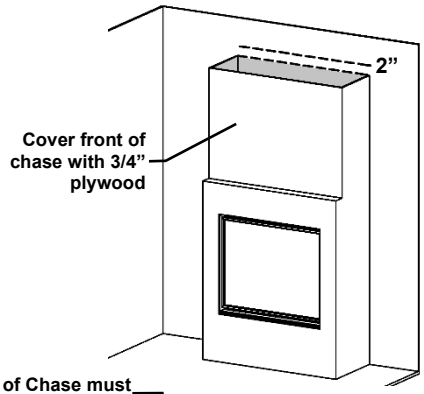

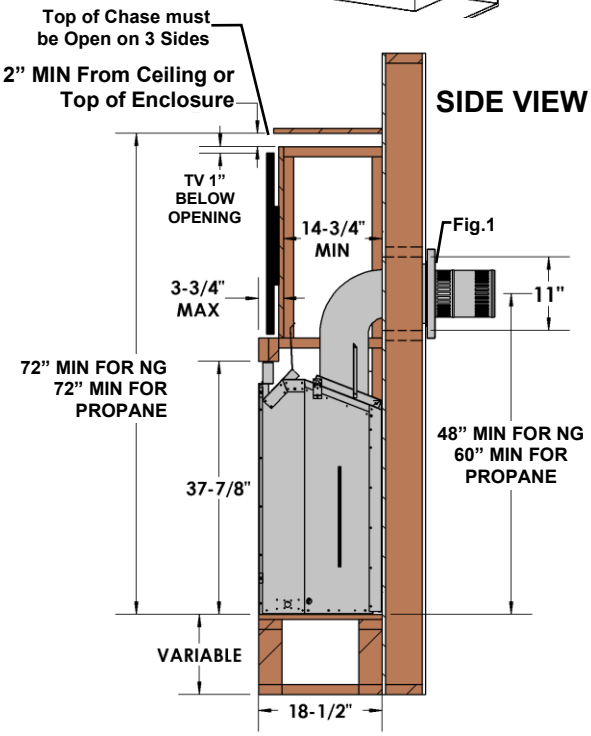

TOP OF CHASE MUST BE OPEN ON 3 SIDES

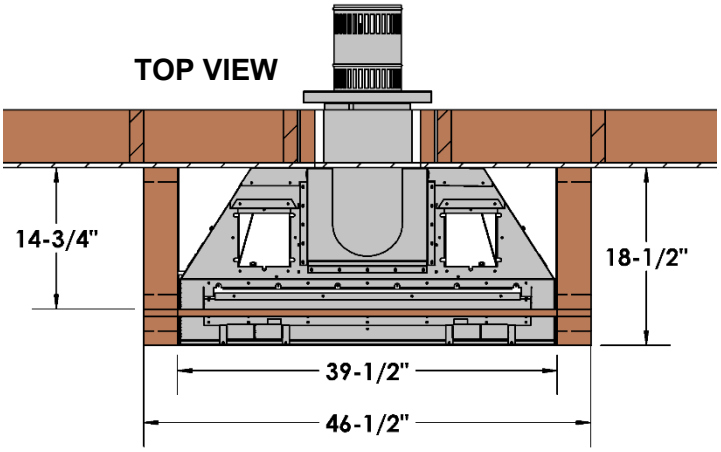

Fig.1
Framing for Horizontal Vent Termination
(See **Installation of Side Wall Venting** Section)

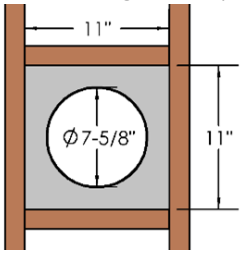

Vertical Venting MUST maintain 1" clearance to combustibles.

ZCV39 -Mantel Clearances- for Vented Chase

Ventilation Plates must be removed before installation into a Vented Chase

A ***Combustible Mantel*** can be placed immediately above the fireplace opening.

A ***Combustible Hearth*** can be placed immediately below the fireplace opening.

An ***Adjacent Side Wall*** may project directly from the side of the fireplace opening.

-Remove Ventilation Plates-
See ***Removal of Vent Covers*** section.

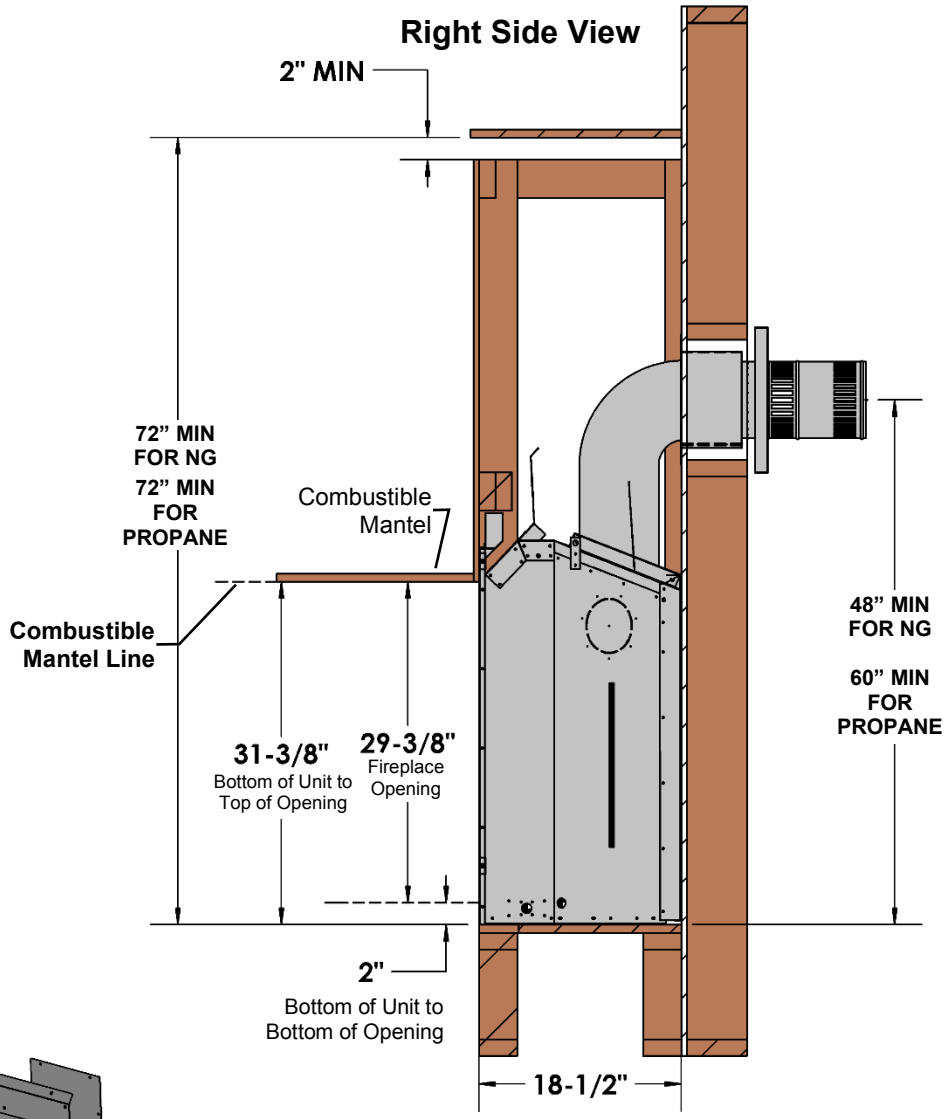

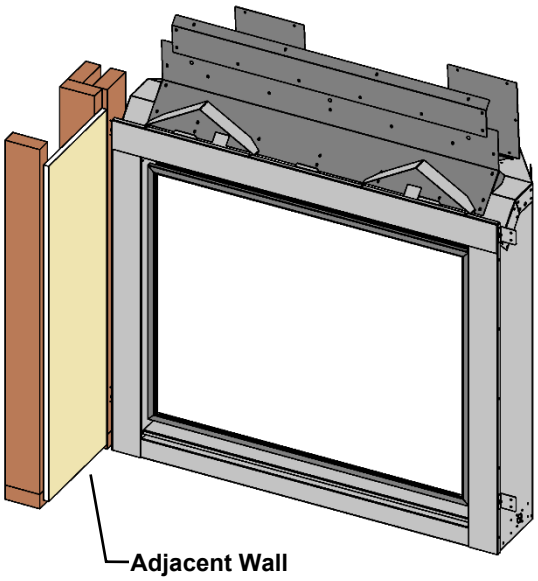

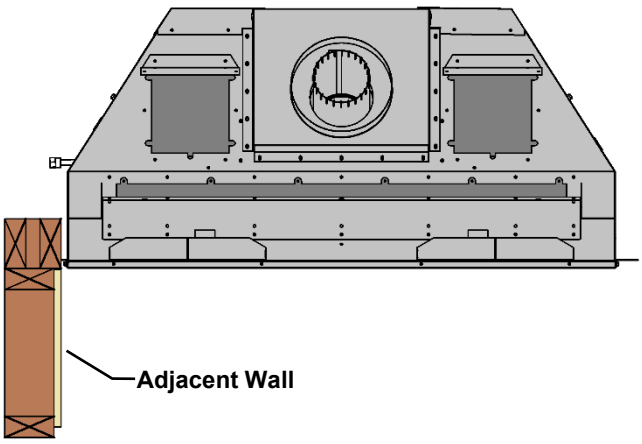

ZCV39 Clearance to Combustibles for Vented Chase
Ventilation Plates must be removed before installation into a Vented Chase

Front	36” [92cm]
Back (from Stand-offs)	0” [0cm]
Side (from Stand-offs)	0” [0cm]
Floor* (See **Note**)	0” [0cm]
Minimum Ceiling / Enclosure Height (from bottom of fireplace)	72” [183cm] Natural Gas 72” [183cm] Propane
Top (from Stand-offs)	0” [0cm]
Adjacent Wall	0” [0cm]
Top of 90° Bend in minimum Enclosure	4” [10.2cm]
Top of 90° Bend inside Enclosures above minimum height	4” [10.2cm]
VENTING SYSTEMS	
Top of Horizontal Pipe	1/1/2” [3.8cm]
Side & Bottom of Horizontal Pipe	1” [2.5cm] All Vent Systems
Vertical Vent Pipe	1” [2.5cm] All Vent Systems

***Note:** If appliance is installed directly on carpeting or other combustible material other than wood flooring, a metal or wood panel extending the full width and depth of the appliance must be used. Carpet may extend 1 inch above the floor of the appliance.

Vinyl Flooring- Luxury Vinyl Plank (LVP), Luxury Vinyl Tile (LVT), and other vinyl flooring can be sensitive to radiant heat and changes in temperature. We recommend a minimum 12-inch hearth should be installed, or the fireplace should be raised at least 24 inches above the floor. **The use of vinyl flooring is done at the installer’s risk.**

-Remove Ventilation Plates- See ***Removal of Vent Covers*** section.

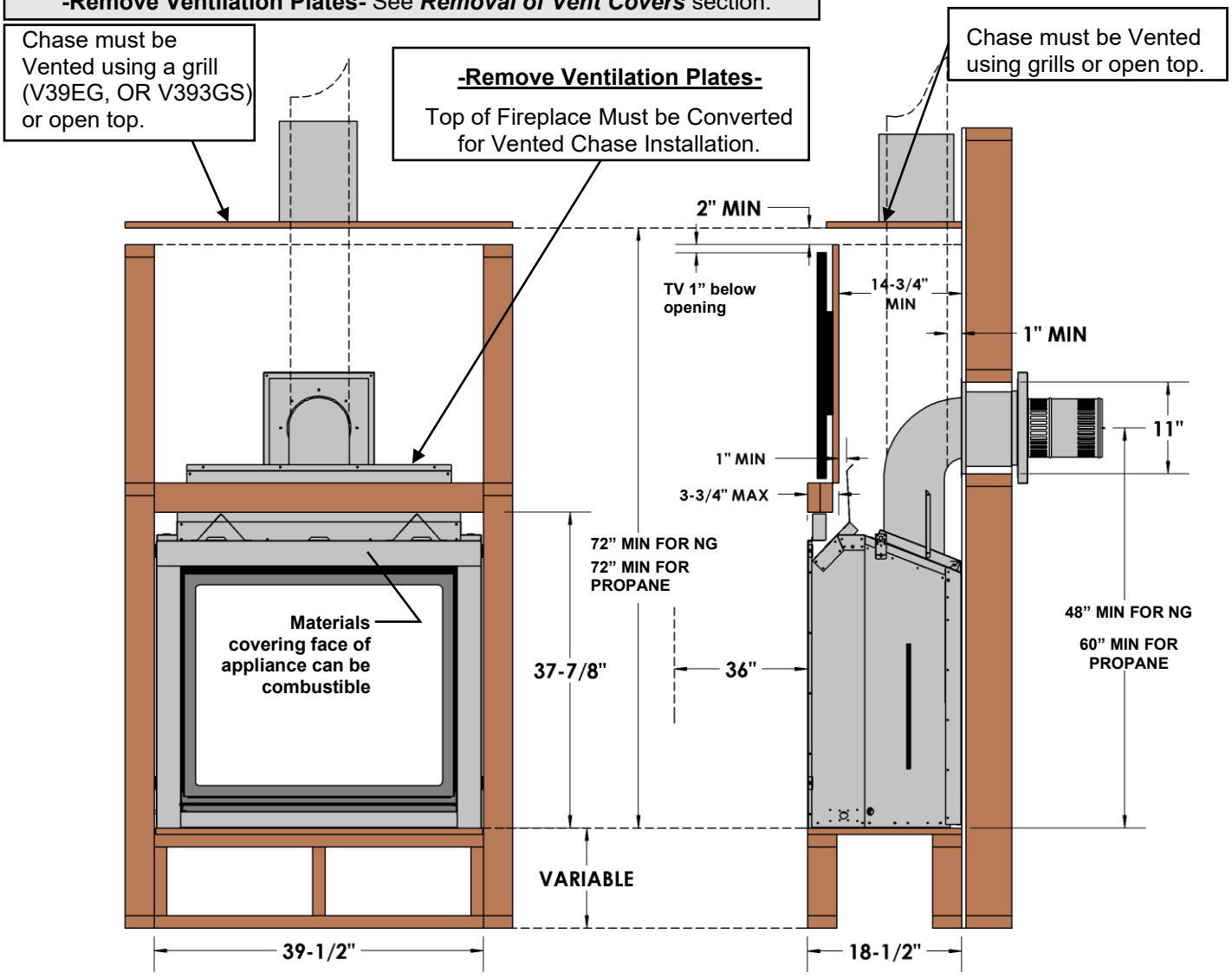

ZCV39 - Facing Requirements for Vented Chase -

Ventilation Plates must be removed before installation into a Vented Chase

Unit and Framing can be covered with a combustible i.e., drywall up to the fireplace opening.

NOTE:

- Fireplace chase must be vented at the top of the enclosure.
- Minimum Chase Height is 72” from bottom of unit.

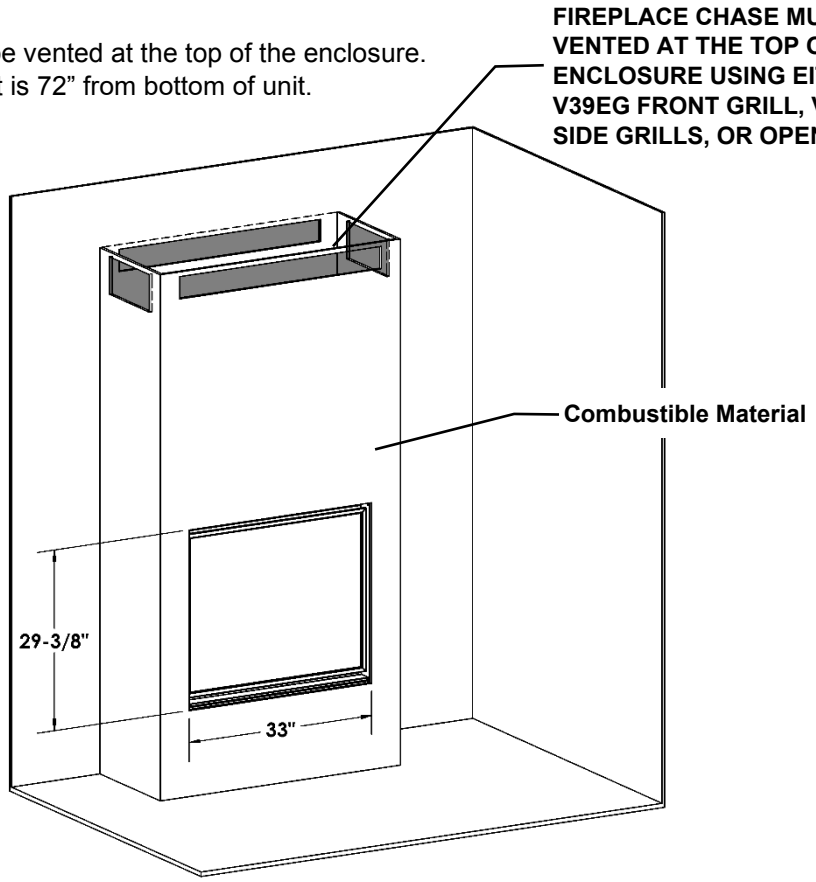

Ventilation Plates must be removed BEFORE installation into a Vented Chase.

See ***Removal of Vent Covers*** section in manual.

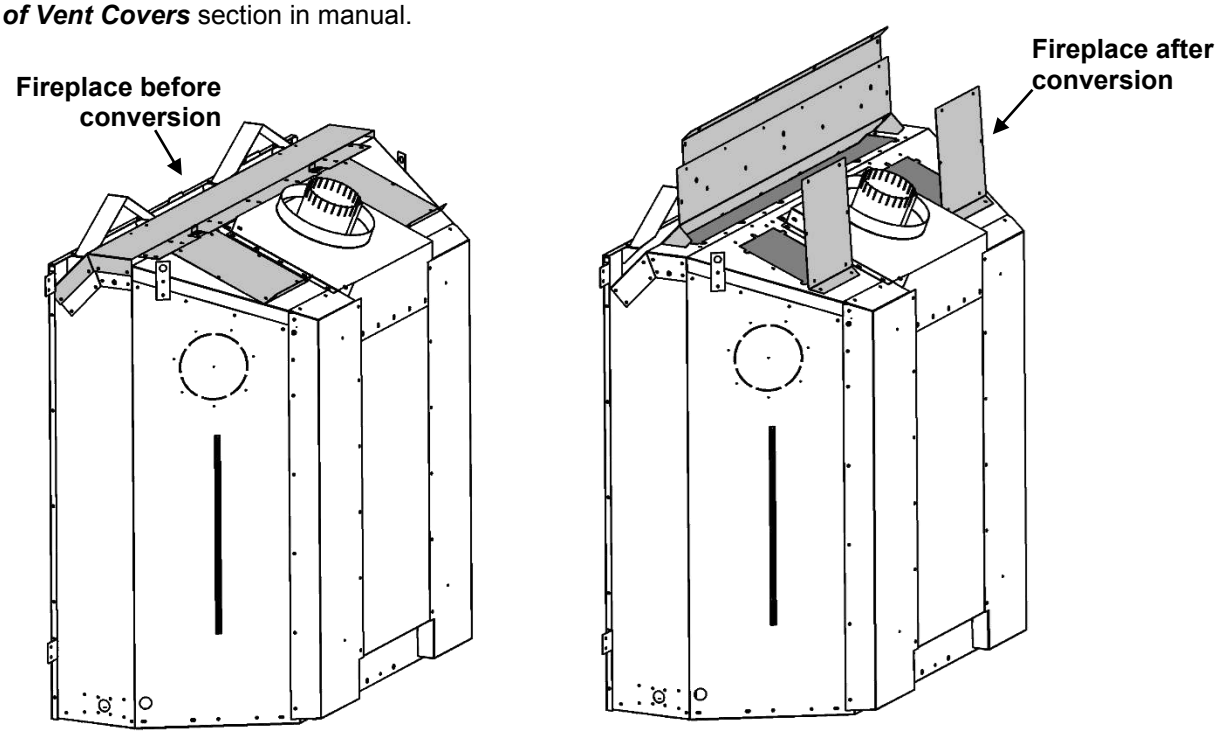

ZCV39 – Electrical Receptacle in a Vented Chase

ELECTRICAL WIRES IN CHASE MUST BE PROPERLY ATTACHED TO INSIDE WALL OF CHASE. DO NOT RUN WIRES DIRECTLY ABOVE APPLIANCE. Please follow the current CSA C22.1 Canadian Electrical Code or the National Electrical Code; ANSI/NFPA 70 when installed in the United States.

An electrical receptacle may be located in the front of a vented chase if the following guidelines are adhered to:

- Receptacle must be located between 34-1/2” and 53-13/16” from the bottom of the appliance.
- The overall depth of the receptacle box must not be more than 4-1/16” from the face of the appliance.
- Wiring must be properly attached to the inside wall of the chase. Do not run wires directly above the appliance.
- Wires run to the back of the chase must not be more than 18” above the bottom of the unit.

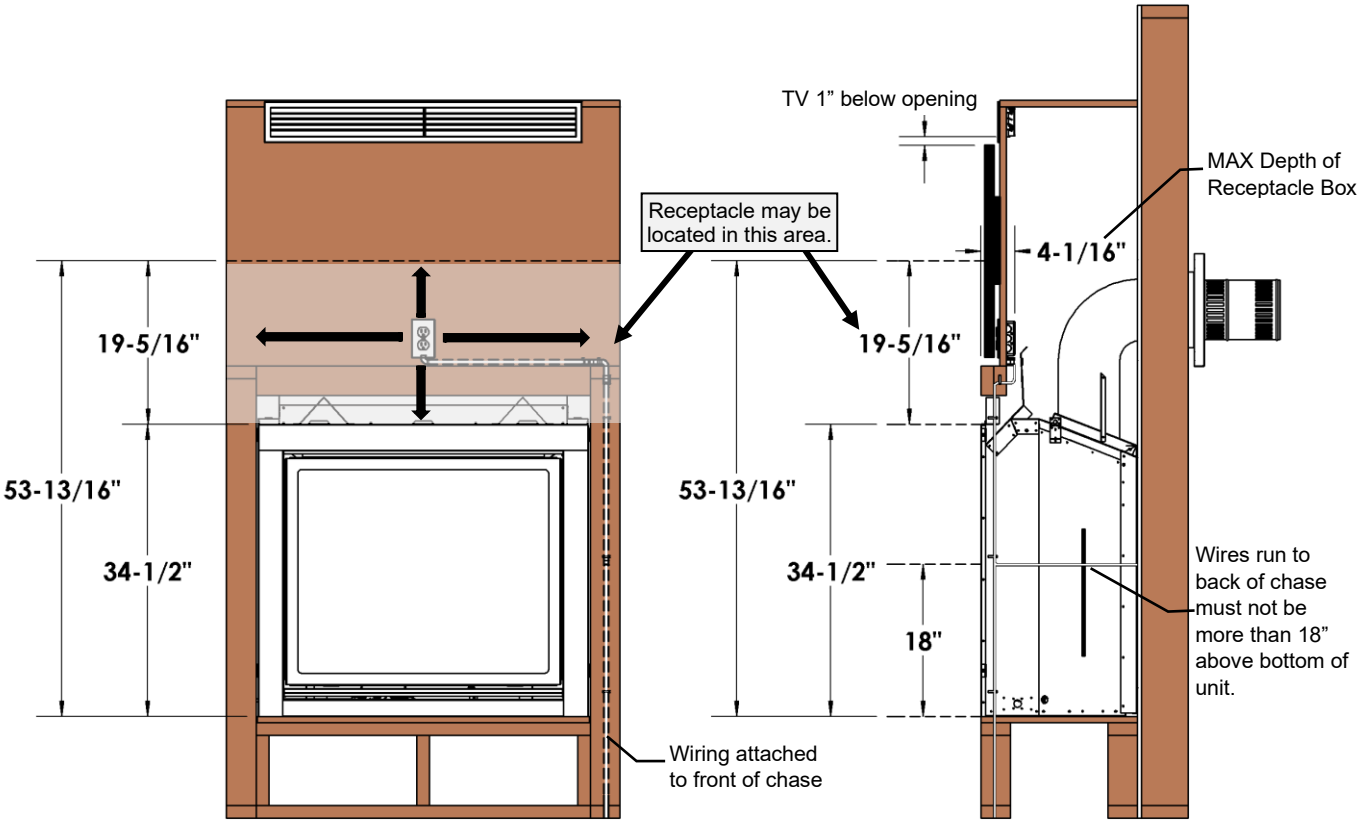

Rear Views of Chase:

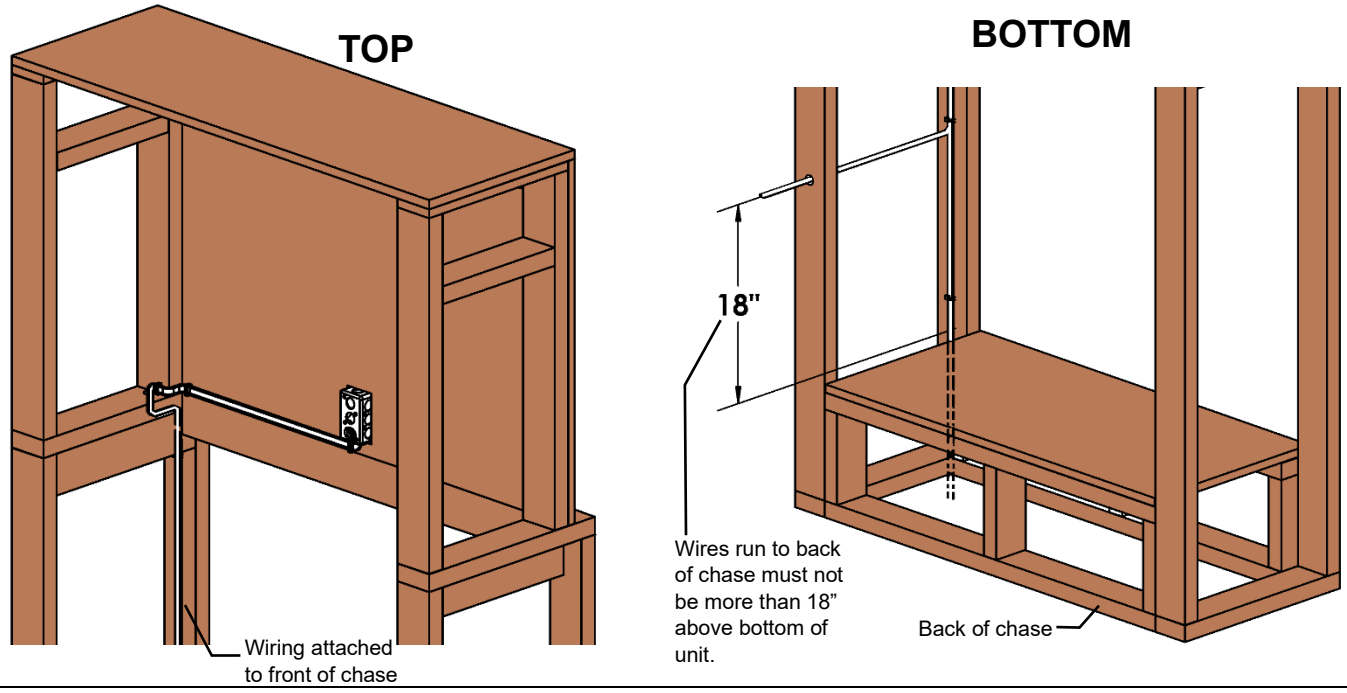

ZCV42 Locating Your Appliance

LOCATION KEY:

A. Flat on Wall

B. Across the Corner

C. As an Island*

D. As a Room Divider*

E. Flat on Wall Corner

F. Exterior Wall

See Mantel Leg Clearances Instruction for the proper placement of fireplace.

*Island installation with a top vent is possible as long as the horizontal portion of the vent system does not exceed 20 feet (6.1 m).

***NOTE:** Horizontal vent runs and offsets are not allowed inside the enclosure.

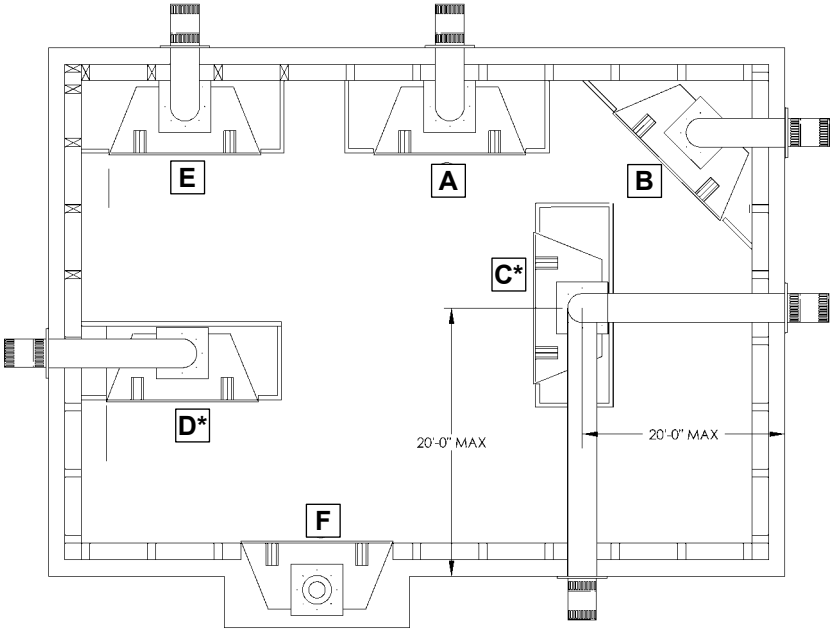

ZCV42 Fireplace Dimensions

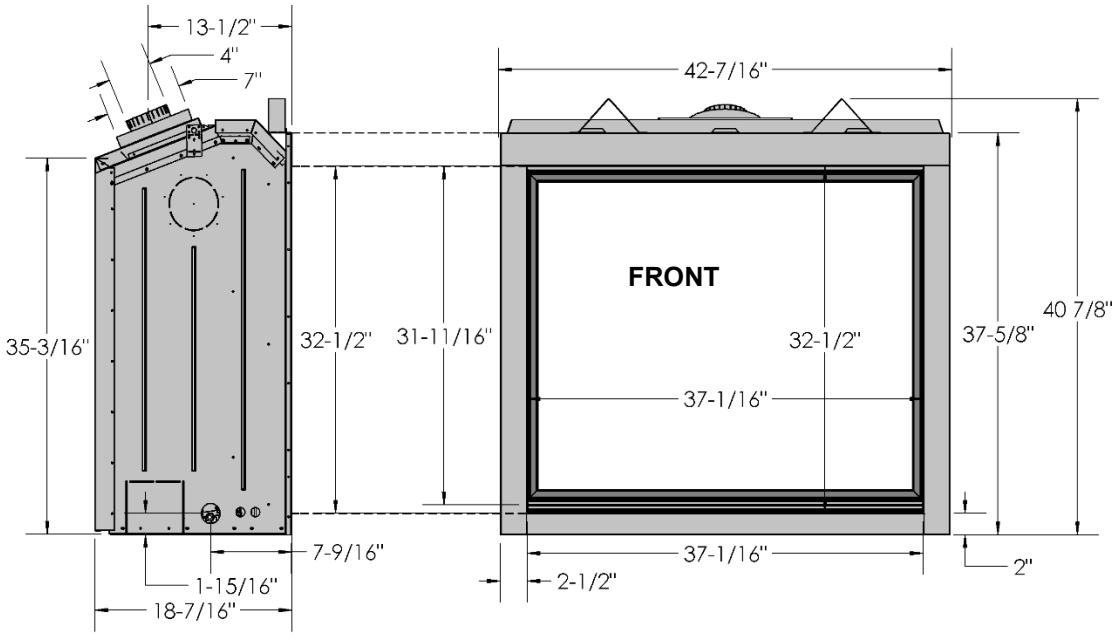

LEFT SIDE

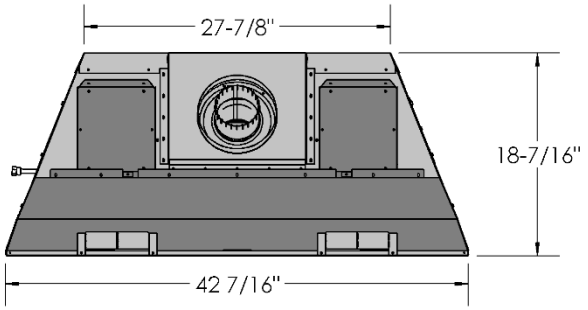

TOP

ZCV42 Framing Dimensions for Non-Vented Chase
Fireplace is installed As Shipped, with Ventilation Plates in place.

Determine whether face of fireplace will be:

- Flush with finished wall (e.g., for surround, cultured stone or other non combustible covering).
- Flush with framing (to be covered with concrete board for a Flat Wall appearance).

Refer to Nailing Tab Guide section also. **These structures are not load bearing.**

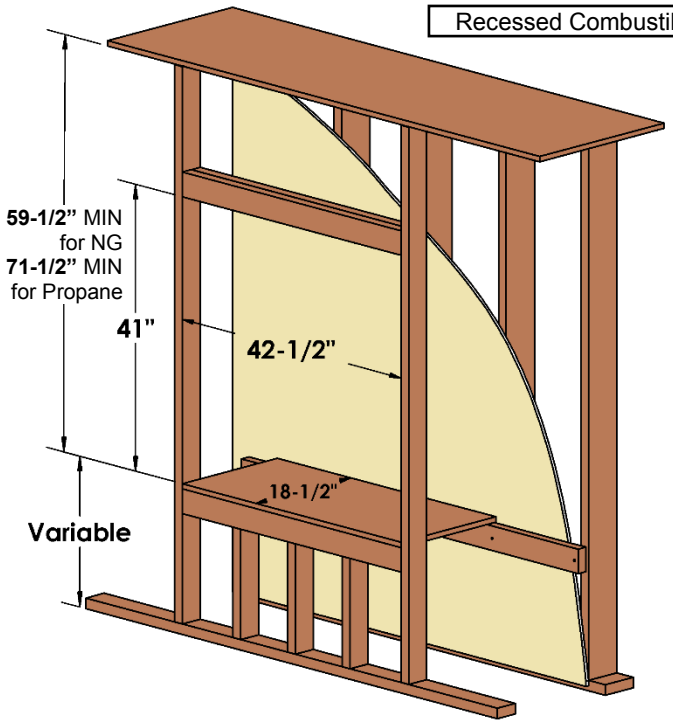

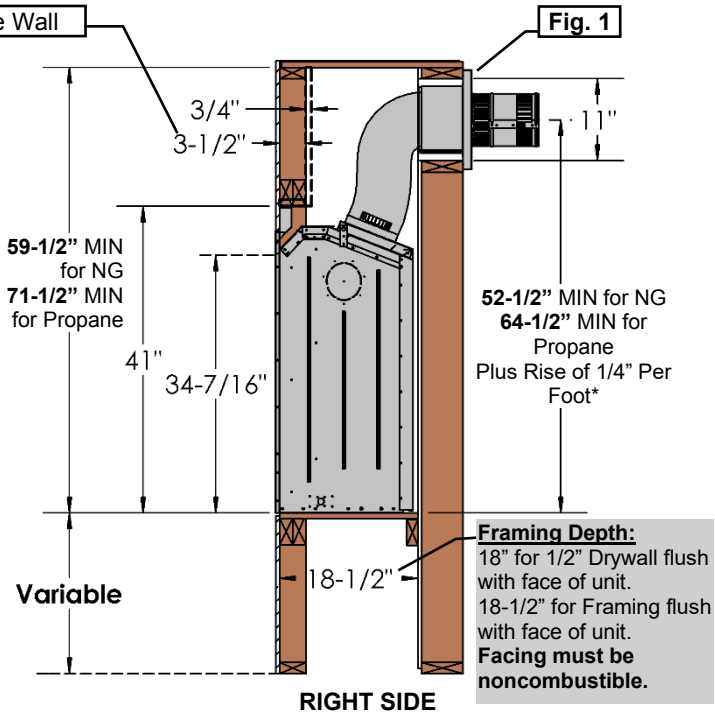

***For Propane Horizontal installations the venting must be an additional one foot above the minimum vertical rise off the flue before going horizontal.**

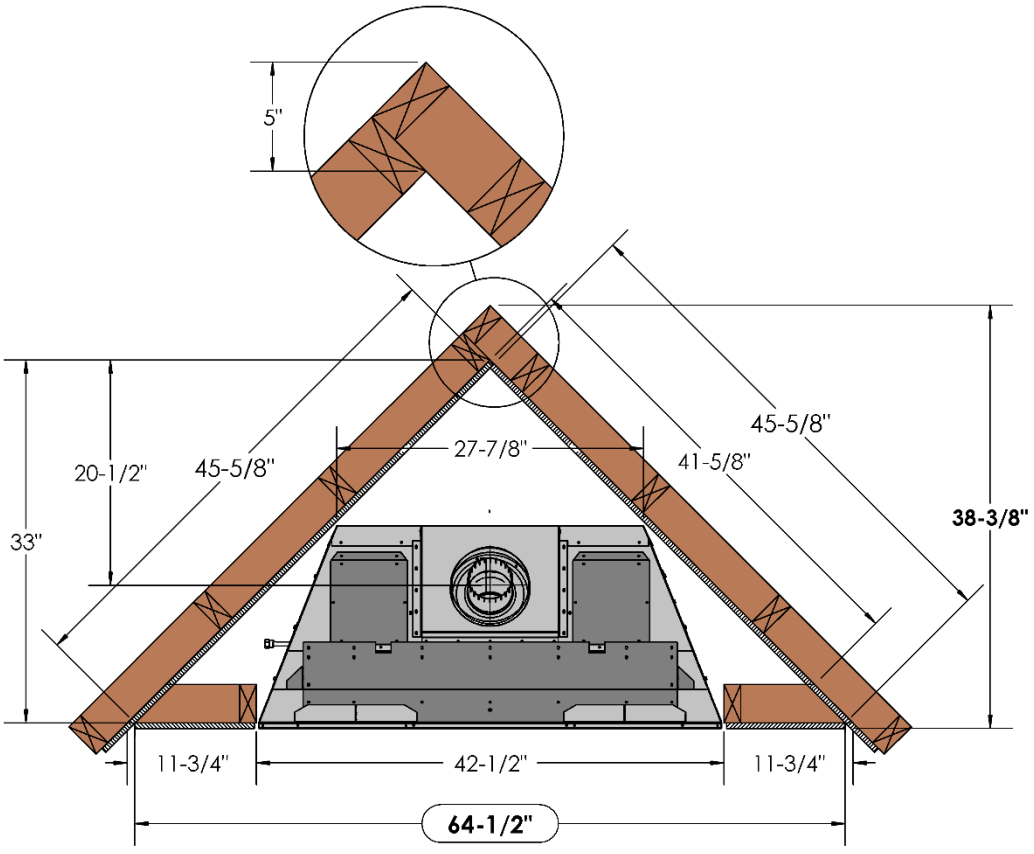

Fig.1
Framing for Horizontal Vent Termination
(See **Installation of Side Wall Venting** Section)

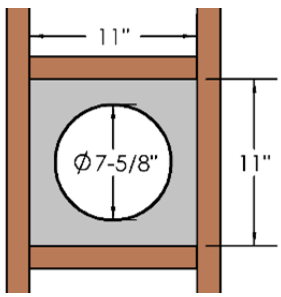

Vertical Venting MUST maintain 1" clearance to combustibles.

ZCV42 Framing Dimensions for Non-Vented Chase Built Outside of Room
Fireplace is installed As Shipped, with Ventilation Plates in place.

Determine whether face of fireplace will be flush with framing or finished wall.

Refer to Nailing Tab Guide also. **NOTE:** These structures are not load bearing.

No loose Combustibles (wood, wiring, etc.) are allowed inside the Chase area.

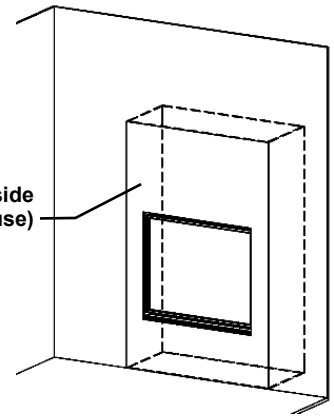

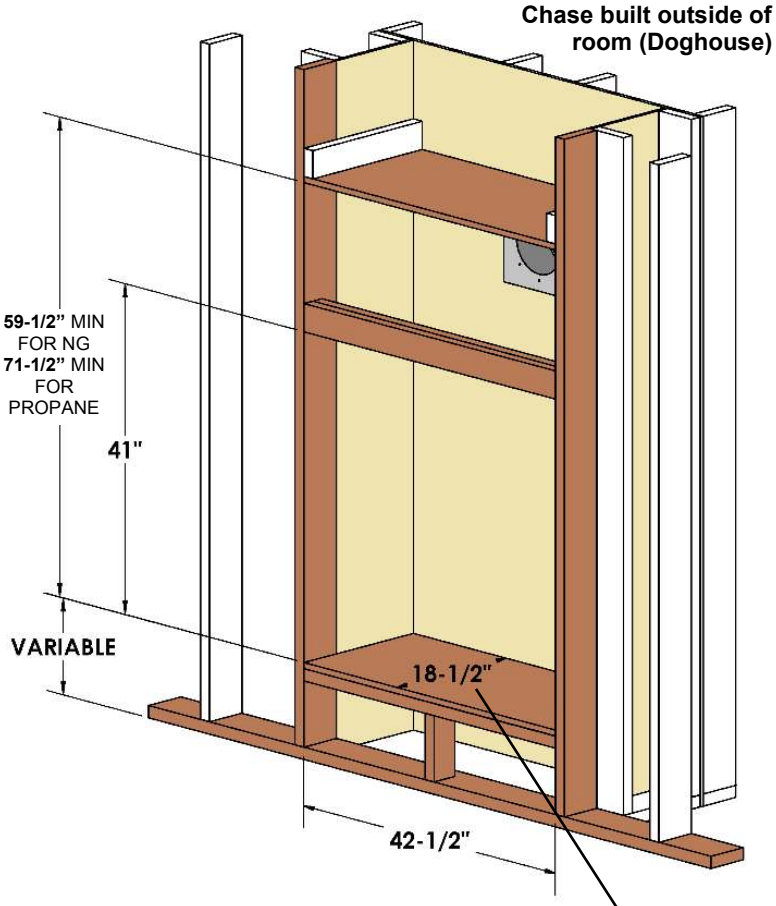

Framing Depth:
18" for 1/2" Drywall flush with face of unit.
18-1/2" for Framing flush with face of unit.
Facing must be noncombustible.

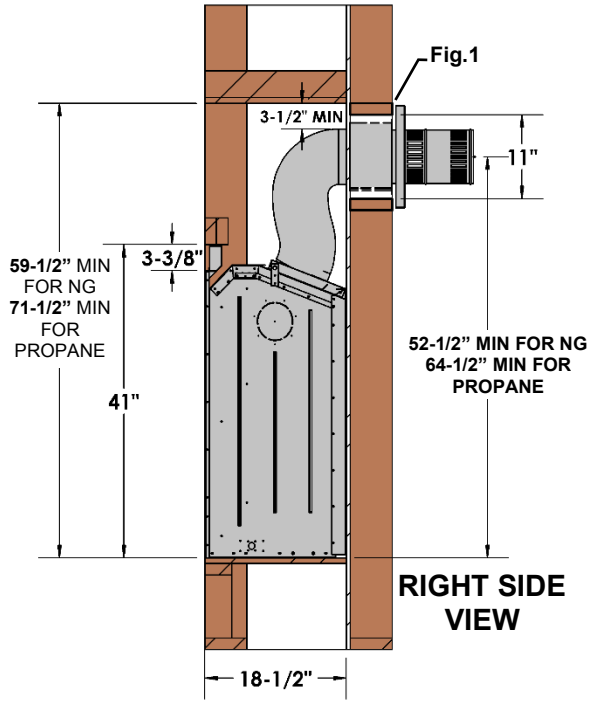

RIGHT SIDE VIEW

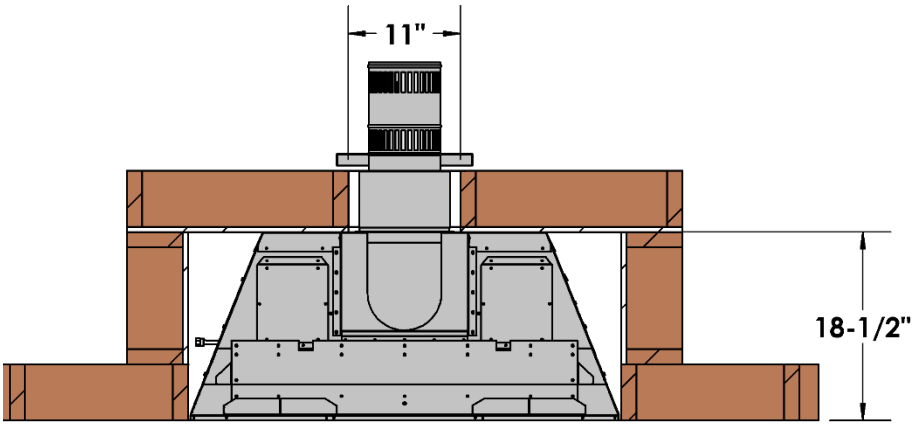

TOP VIEW

Fig.1
Framing for Horizontal Vent Termination
(See **Installation of Side Wall Venting** Section)

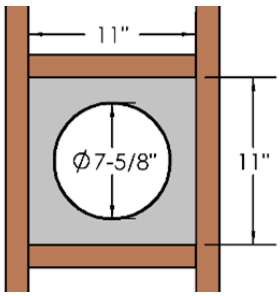

Vertical Venting MUST maintain 1" clearance to combustibles.

42ZCV Mantel Clearances for Non-Vented Chase
Fireplace is installed As Shipped, with Ventilation Plates in place.

Before installing any mantels it is important to determine the combustibility of its material(s). There are two types of mantels to consider: Combustible and Non-Combustible.

A **Combustible Mantel** is one that consists of material(s) that may discolor, combust, or lose its integrity in the presence of heat. These types of mantels must strictly conform to the dimensional requirements shown.

Conversely, a **Non-Combustible Mantel** is one that is constructed with material(s) that will not combust. Check your local codes and regulations to determine whether your mantel is combustible or Non-Combustible.

The advantage to Non-Combustible Mantels is that it may extend right up to the tile lip of the fireplace. Combustible mantels must adhere to the dimensional restrictions shown.

⚠-Combustible Objects on Non-Combustible Mantel Warning-
Combustible objects must not be placed on a Non-combustible Mantel unless the mantel meets the dimensional requirements for a Combustible Mantel. Determine whether your mantel conforms to the requirements of a Combustible Mantel.

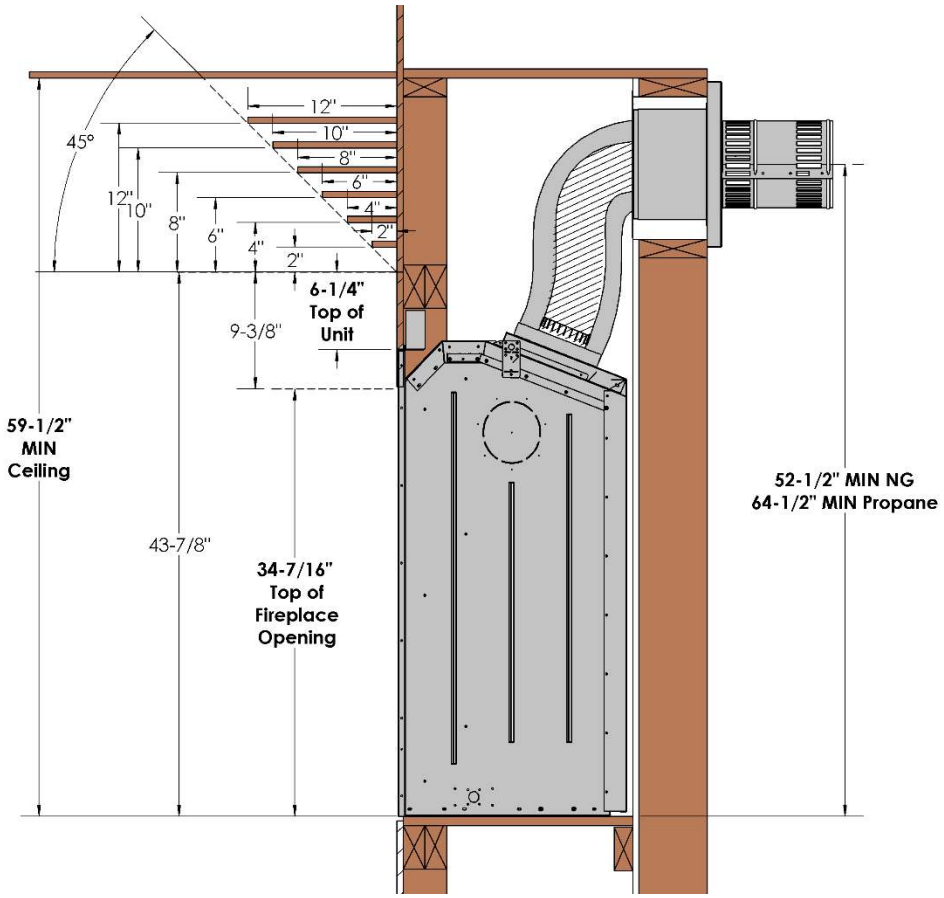

Mantel Dimensions are from front face or Non-Combustible Facing Materials covering fireplace.

- Mantel Leg Clearances -

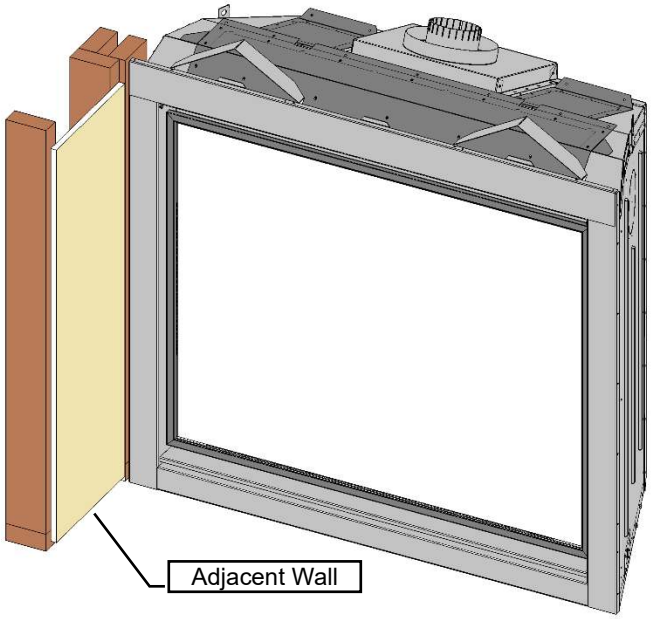

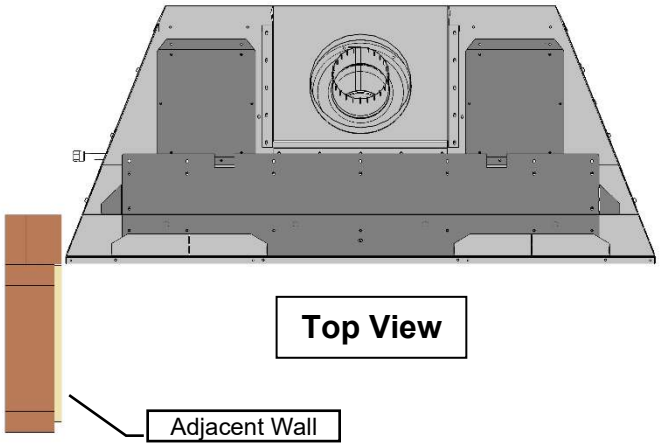

Top View

ZCV42 Clearance to Combustibles for Non-Vented Chase

Fireplace is installed As Shipped, with Ventilation Plates in place.

Clearance to Combustibles	ZCV42
Front	36” [92cm]
Back (from Stand-offs)	0” [0cm]
Side (from Stand-offs)	0” [0cm]
Floor*	0” [0cm]
Minimum Ceiling Height (from bottom of fireplace)	59.5” [151cm]
Top (from Stand-offs)	0” [0cm]
Top of 90° Bend in minimum Enclosure of 59.5”	3-1/2” [8.9]
Top of 90° Bend in Enclosure over 59.5”	3-1/2” [8.9]
VENTING SYSTEMS	
Top of Horizontal Pipe	1/1/2” [3.8cm]
Side & Bottom of Horizontal Pipe	1” [2.5cm] All Vent Systems
Vertical Vent Pipe	1” [2.5cm] All Vent Systems

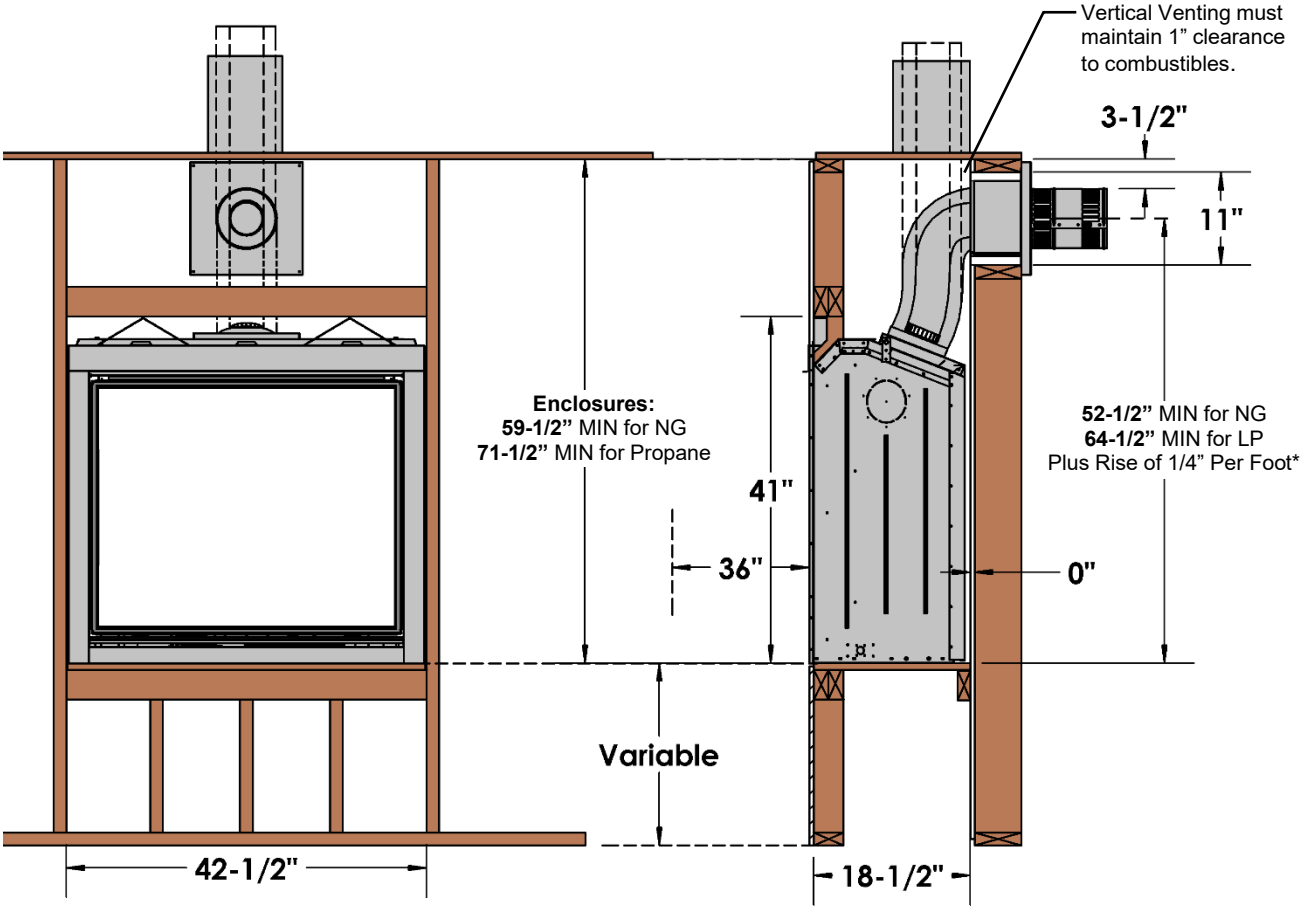

*Note: If appliance is installed directly on carpeting or other combustible material other than wood flooring, a metal or wood panel extending the full width and depth of the appliance must be used. Carpet may extend 1 inch above the floor of the appliance.

Vinyl Flooring- Luxury Vinyl Plank (LVP), Luxury Vinyl Tile (LVT), and other vinyl flooring can be sensitive to radiant heat and changes in temperature. We recommend a minimum 12-inch hearth should be installed, or the fireplace should be raised at least 24 inches above the floor. **The use of vinyl flooring is done at the installer’s risk.**

ZCV42 Facing Requirements for Non-Vented Chase
Fireplace is installed As Shipped, with Ventilation Plates in place.

Required:
ANY MATERIALS COVERING THE FACE OF THE FIREPLACE MUST BE NON-COMBUSTIBLE (i.e. brick, stone, tile, concrete board).

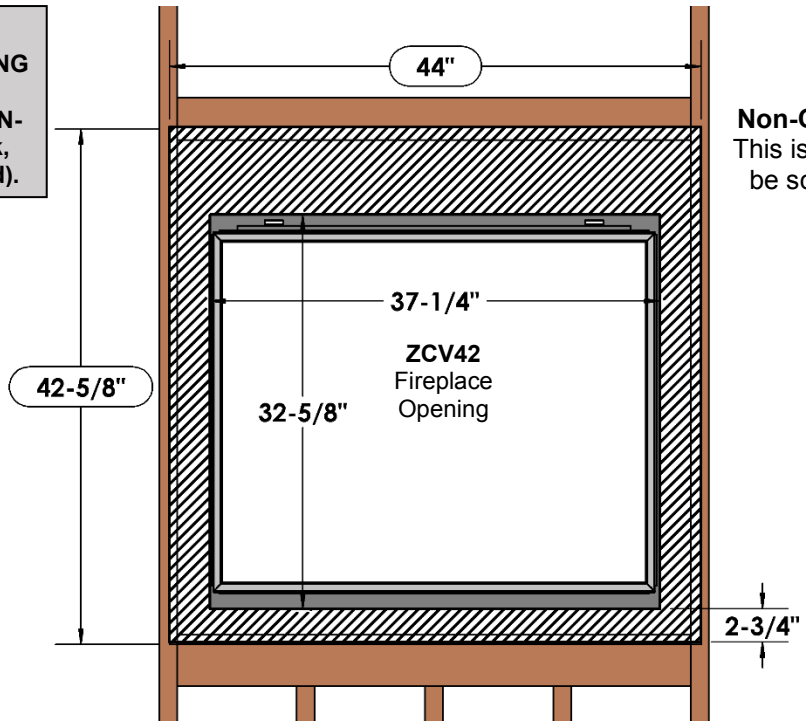

Recommended:
Non-Combustible 42-5/8" x 44"
This is to allow concrete board to be screwed to framing if used.

Note: Do not drive excessively long screws into the face of the unit as internal parts may be damaged.

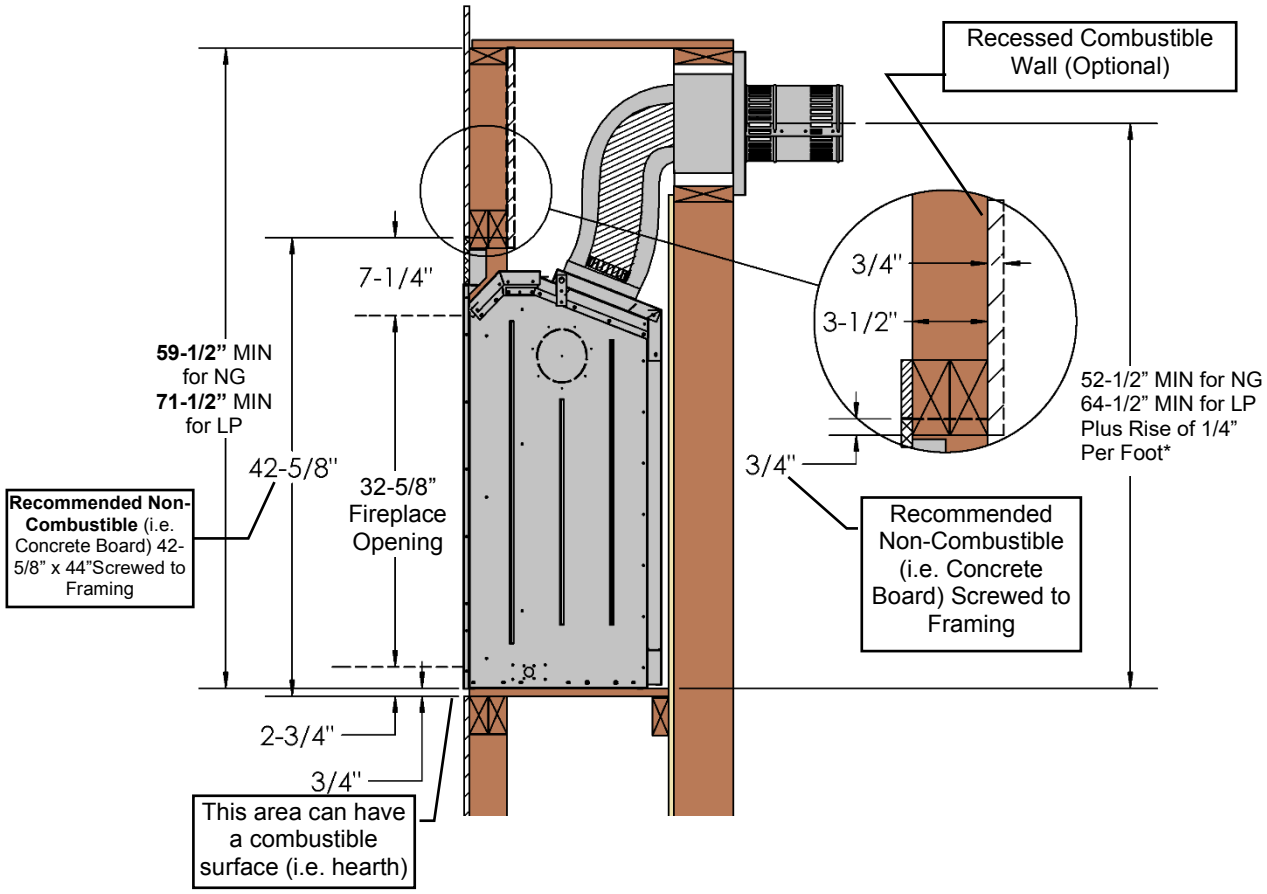

ZCV42 Framing Dimensions for Vented Chase (built outside of room) V39EG Grill

Ventilation Plates must be removed before installation into a Vented Chase

Grill **MUST** be located at top of chase. Determine whether face of fireplace will be flush with framing or finished wall. Refer to Nailing Tab Guide also. **NOTE:** These structures are not-load bearing.

No loose Combustibles (wood, wiring, etc.) are allowed inside the Chase area.

-Remove Ventilation Plates-
See ***Removal of Vent Covers*** section.

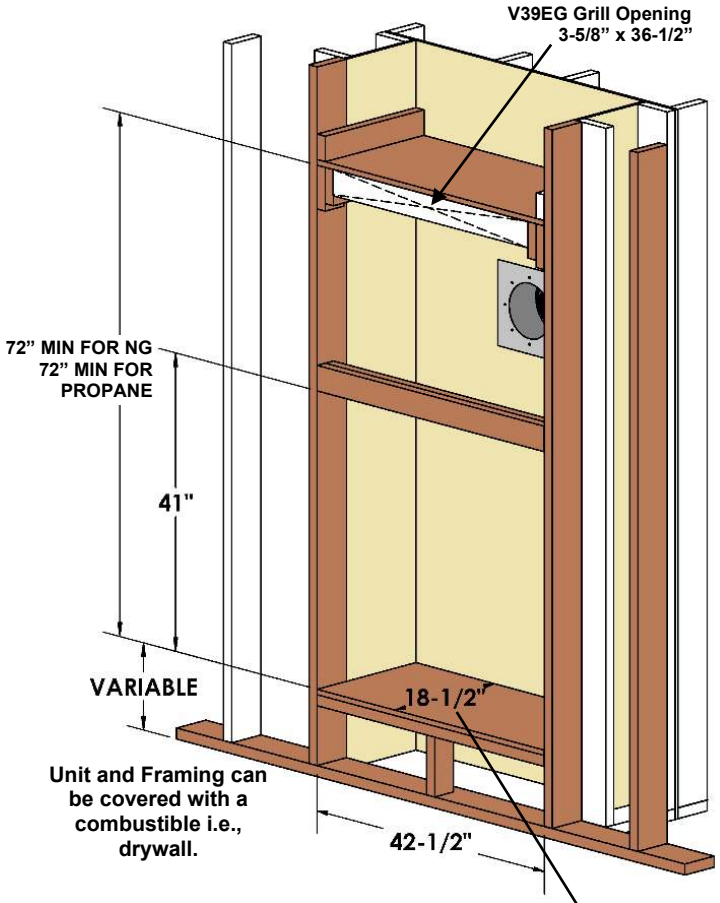

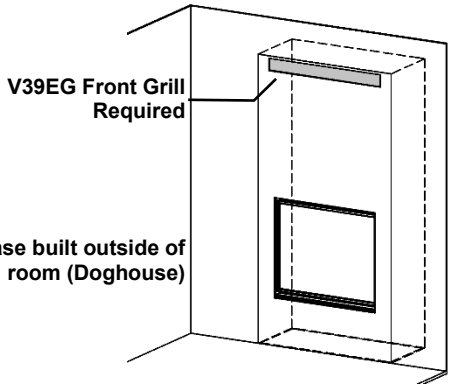

Framing Depth:
18" for 1/2" Drywall flush with face of unit.
18-1/2" for Framing flush with face of unit.

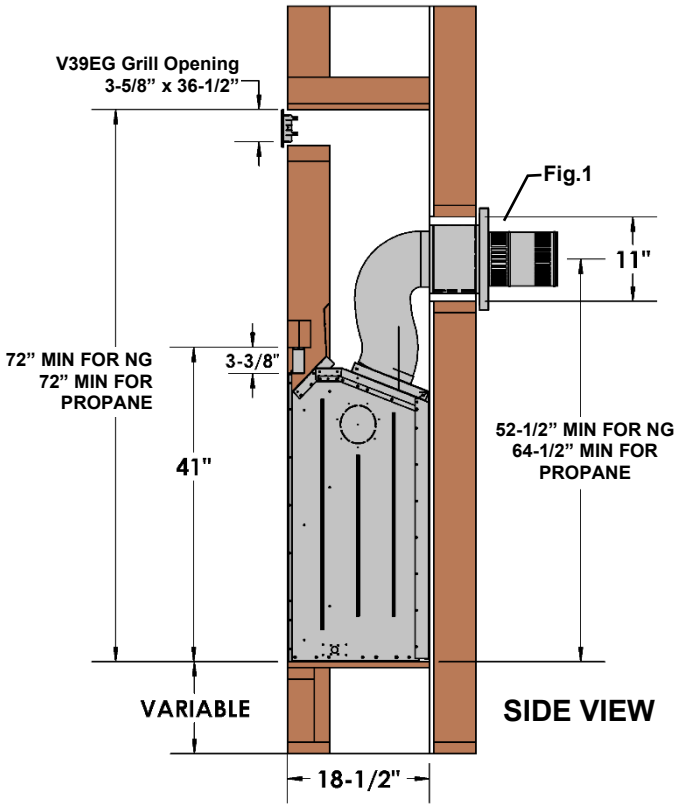

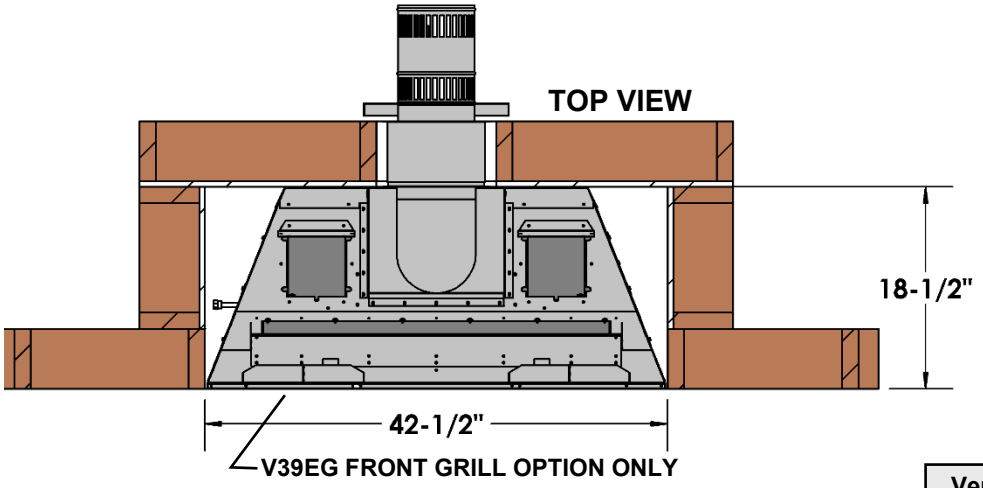

Fig.1
Framing for Horizontal Vent Termination
(See **Installation of Side Wall Venting** Section)

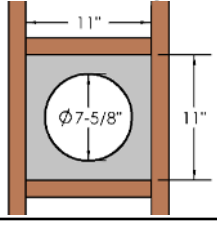

Vertical Venting MUST maintain 1" clearance to combustibles.

ZCV42 Framing Dimensions for Vented Chase with V39EG -OR- V39EGS Grills

Ventilation Plates must be removed before installation into a Vented Chase

Grills **MUST** be located at top of chase. Determine whether face of fireplace will be flush with framing or finished wall. Refer to Nailing Tab Guide also. **NOTE:** These structures are not load bearing.

No loose Combustibles (wood, wiring, etc.) are allowed inside the Chase area.

-Remove Ventilation Plates-
See ***Removal of Vent Covers*** section.

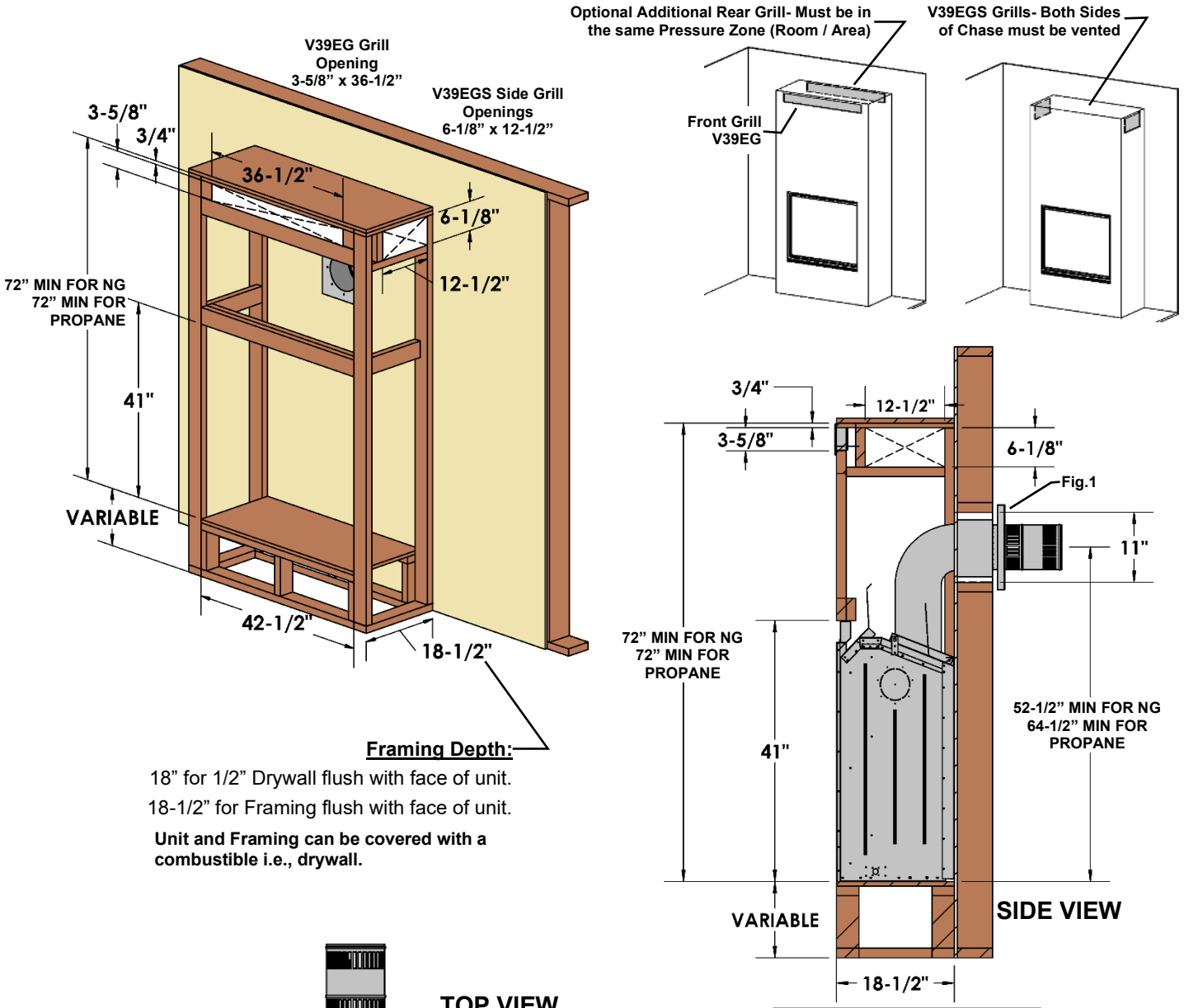

Framing Depth:

18" for 1/2" Drywall flush with face of unit.

18-1/2" for Framing flush with face of unit.

Unit and Framing can be covered with a combustible i.e., drywall.

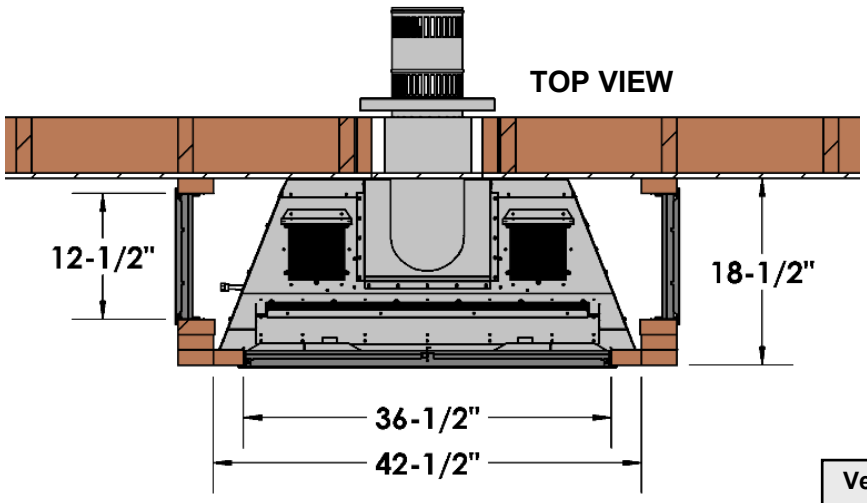

Fig.1
Framing for Horizontal Vent Termination
(See **Installation of Side Wall Venting** Section)

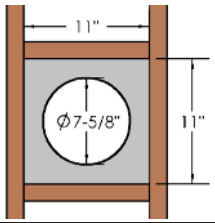

Vertical Venting MUST maintain 1" clearance to combustibles.

ZCV42 Framing Dimensions for Vented Chase with Open Top

Ventilation Plates must be removed before installation into a Vented Chase

Determine whether face of fireplace will be flush with framing or finished wall. Refer to Nailing Tab Guide also. **NOTE:** These structures are not load bearing.

-Remove Ventilation Plates-
See ***Removal of Vent Covers*** section.

No loose Combustibles (wood, wiring, etc.) are allowed inside the Chase area.

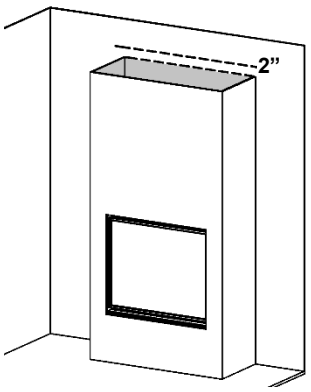

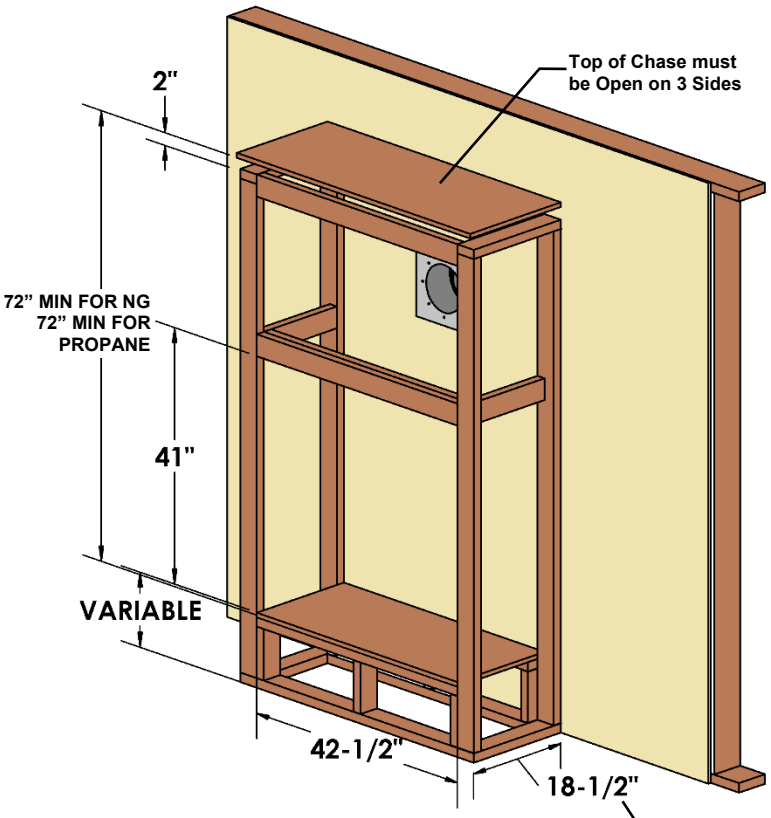

Unit and Framing can be covered with a combustible i.e., drywall.

Framing Depth:

18" for 1/2" Drywall flush with face of unit.

18-1/2" for Framing flush with face of unit.

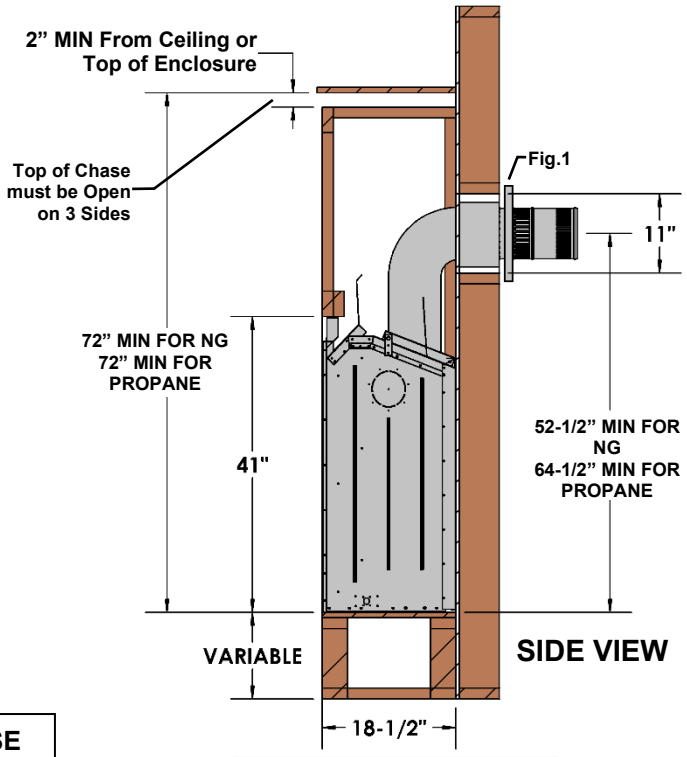

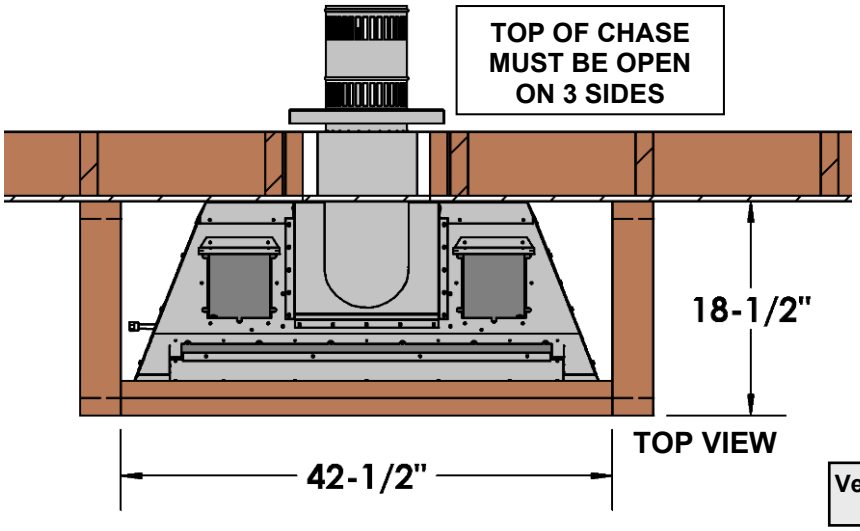

Fig.1
Framing for Horizontal Vent Termination
(See **Installation of Side Wall Venting** Section)

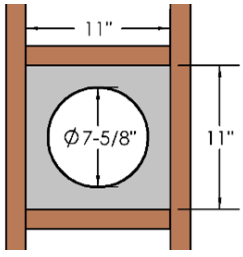

Vertical Venting MUST maintain 1" clearance to combustibles.

ZCV42 Framing Dimensions - Recessed Vented Chase - V39EG -OR- V39EGS Grills Ventilation Plates must be removed before installation into a Vented Chase

Grills **MUST** be located at top of chase. Determine whether face of fireplace will be flush with framing or finished wall. Refer to Nailing Tab Guide also. **NOTE:** These structures are not load bearing.

-Remove Ventilation Plates-
See ***Removal of Vent Covers*** section.

No loose Combustibles (wood, wiring, etc.) are allowed inside the Chase area.

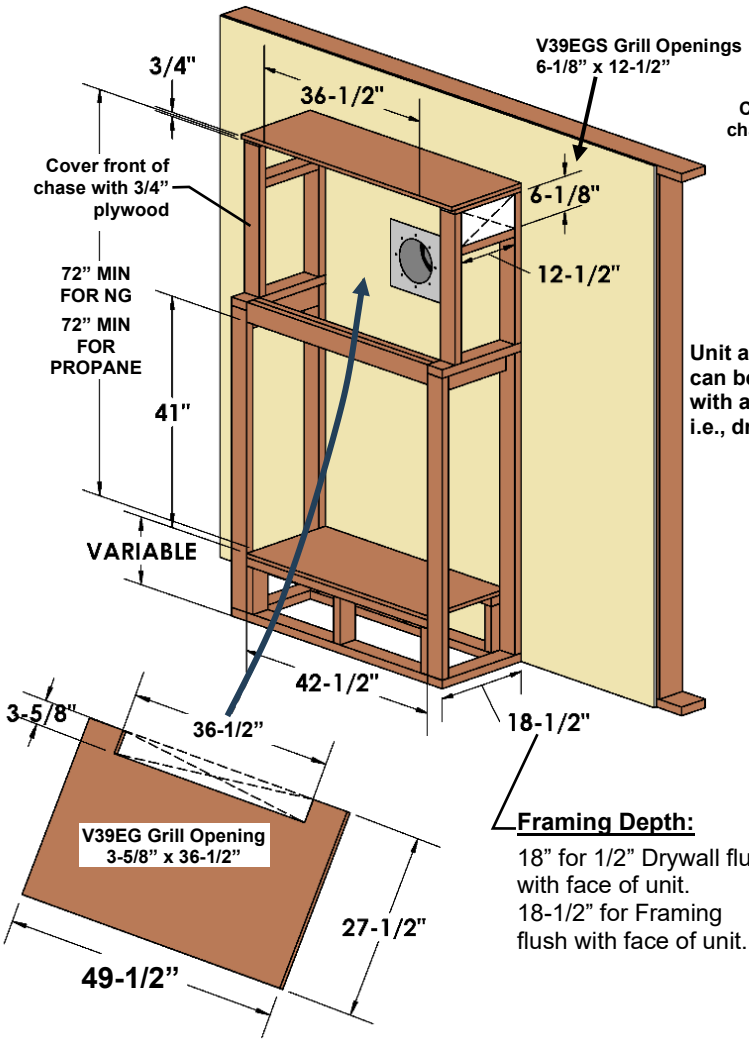

Framing Depth:
18" for 1/2" Drywall flush with face of unit.
18-1/2" for Framing flush with face of unit.

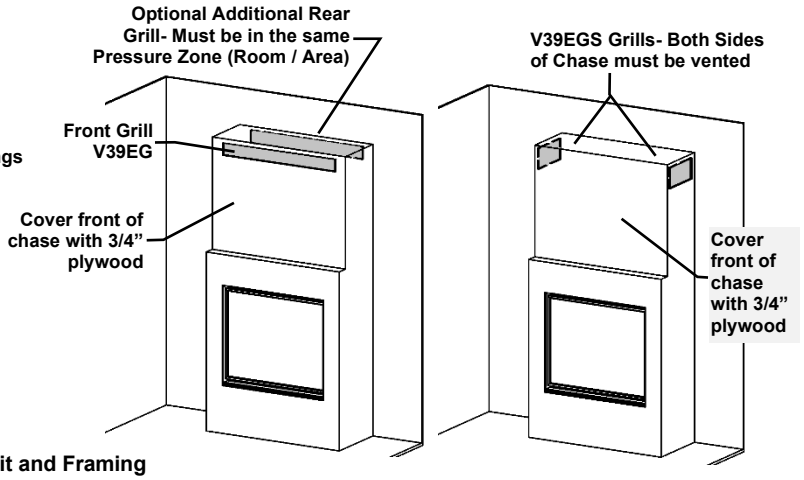

Unit and Framing can be covered with a combustible i.e., drywall.

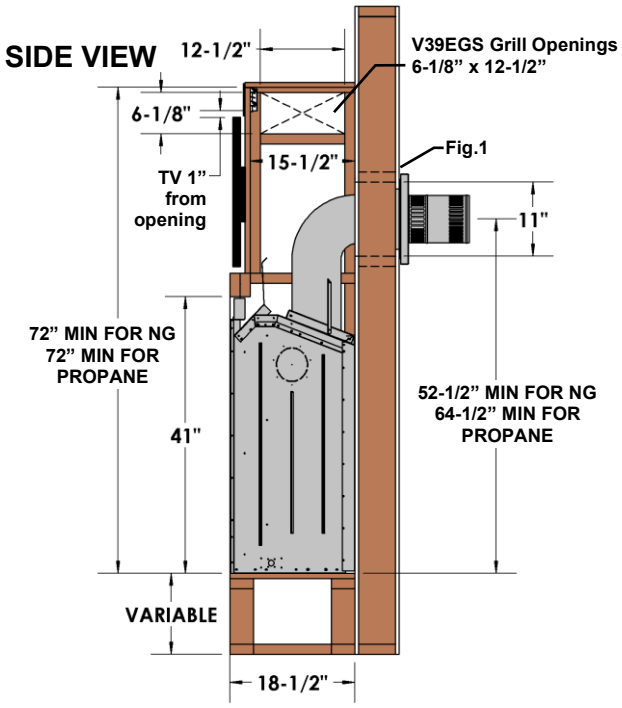

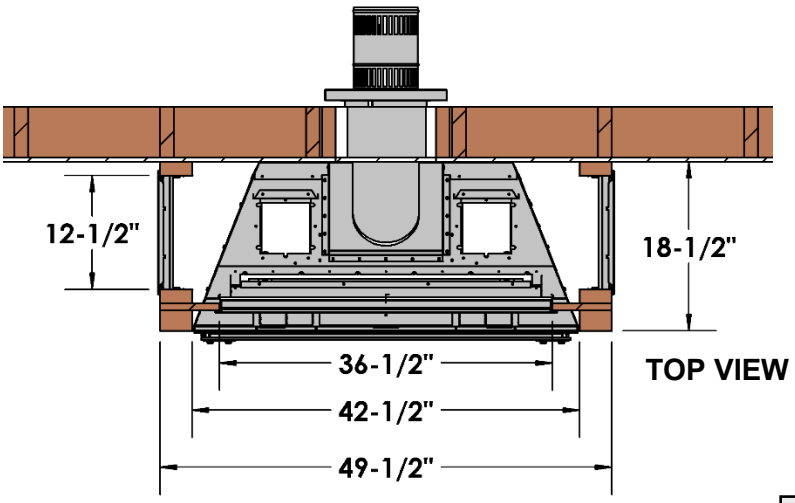

Fig.1
Framing for Horizontal Vent Termination
(See **Installation of Side Wall Venting** Section)

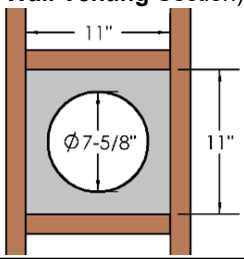

Vertical Venting MUST maintain 1" clearance to combustibles.

ZCV42 Framing Dimensions - Recessed Vented Chase with Open Top

Ventilation Plates must be removed before installation into a Vented Chase

Determine whether face of fireplace will be flush with framing or finished wall. Refer to Nailing Tab Guide also. **NOTE:** These structures are not load-bearing.

No loose Combustibles (wood, wiring, etc.) are allowed inside the Chase area.

-Remove Ventilation Plates-
See ***Removal of Vent Covers*** section.

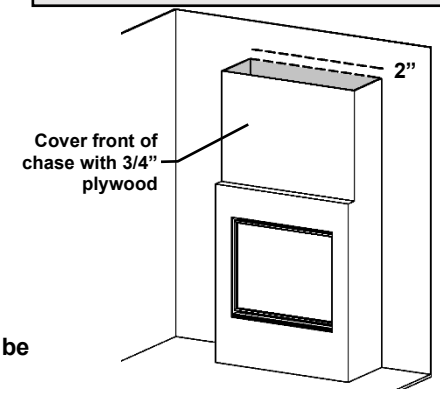

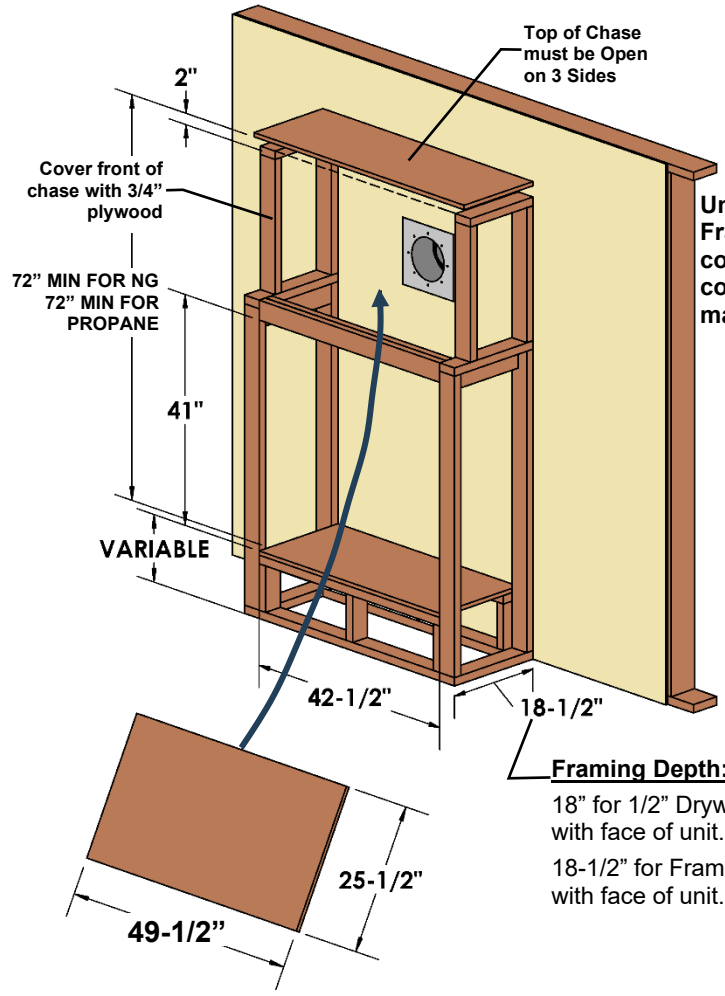

Unit and Framing can be covered with combustible material.

Framing Depth:

18" for 1/2" Drywall flush with face of unit.

18-1/2" for Framing flush with face of unit.

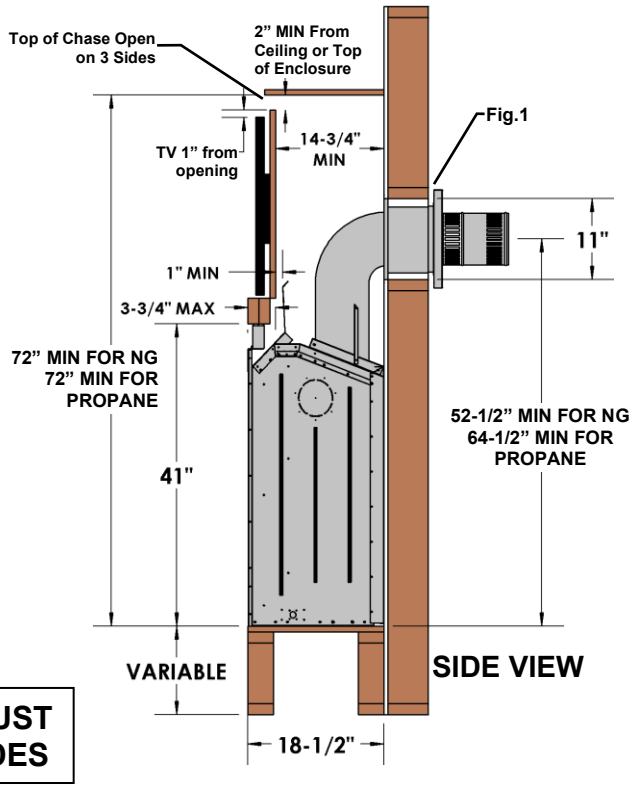

TOP OF CHASE MUST BE OPEN ON 3 SIDES

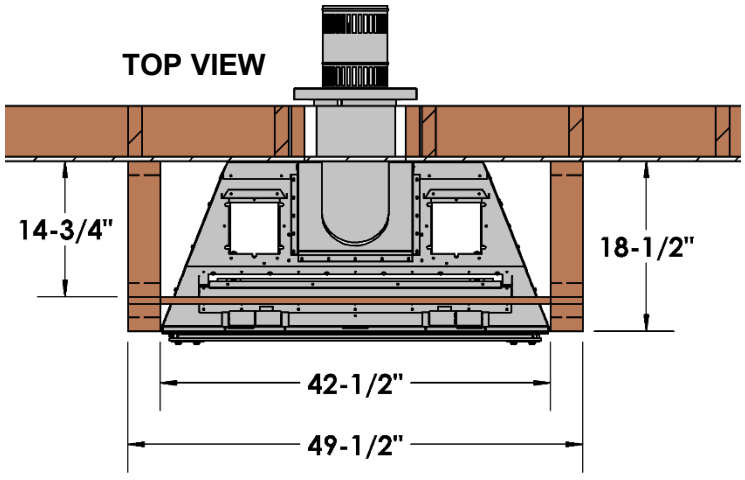

Fig.1
Framing for Horizontal Vent Termination
(See **Installation of Side Wall Venting** Section)

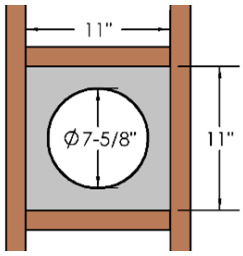

Vertical Venting MUST maintain 1" clearance to combustibles.

ZCV42 -Mantel Clearances- for Vented Chase

Ventilation Plates must be removed before installation into a Vented Chase

A ***Combustible Mantel*** can be placed immediately above the fireplace opening.

A ***Combustible Hearth*** can be placed immediately below the fireplace opening.

An ***Adjacent Side Wall*** may project directly from the side of the fireplace opening.

-Remove Ventilation Plates-
See ***Removal of Vent Covers*** section.

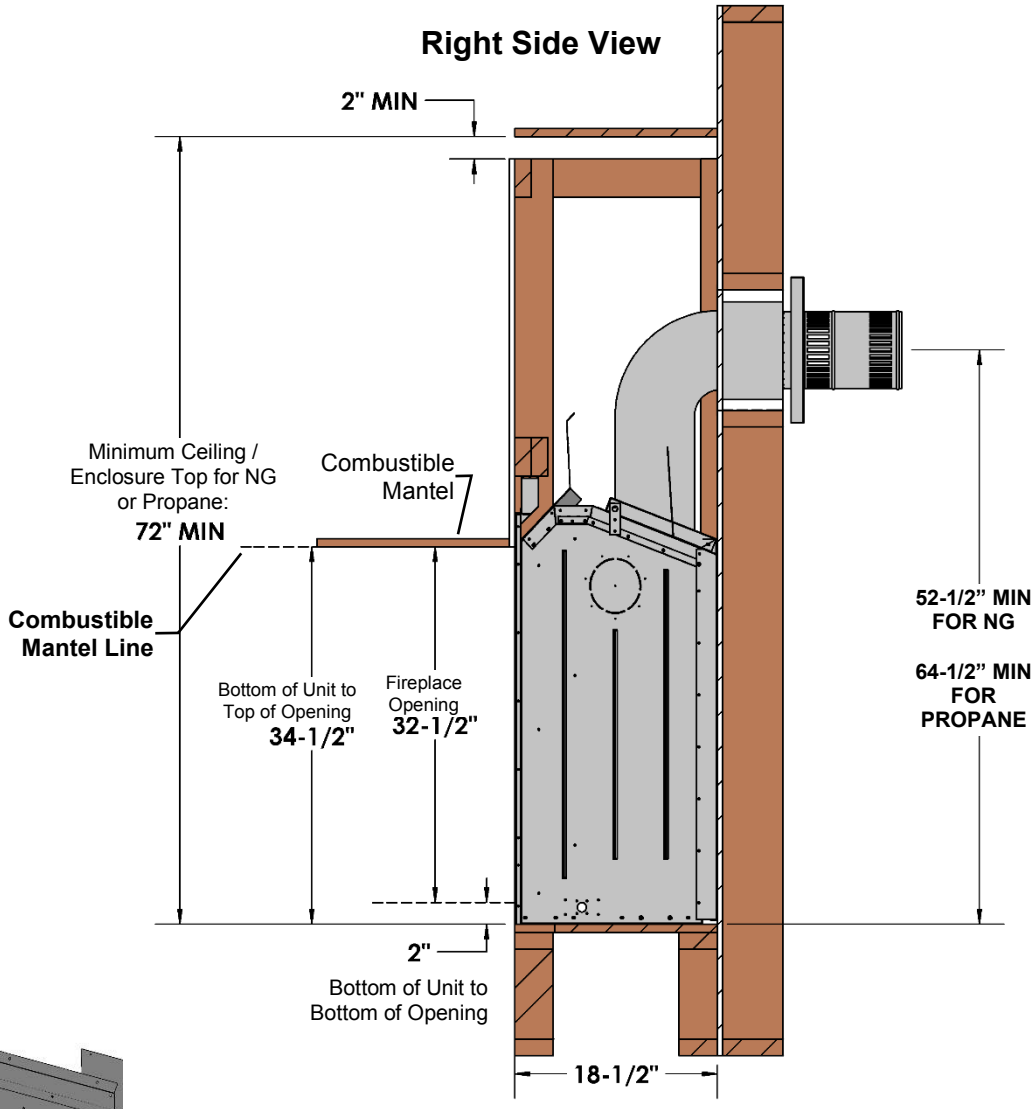

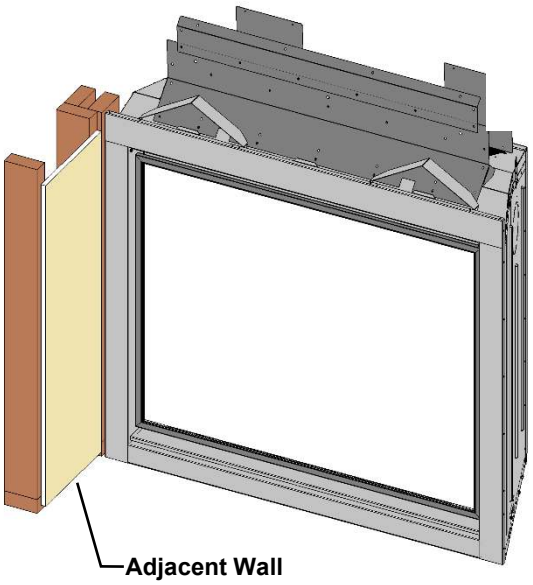

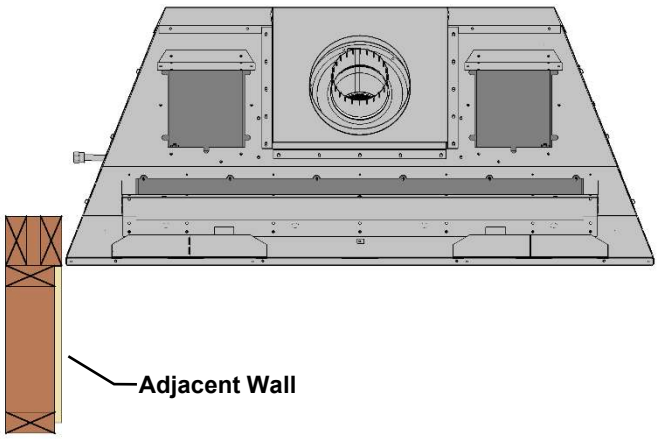

ZCV42 Clearance to Combustibles for Vented Chase
Ventilation Plates must be removed before installation into a Vented Chase

Front	36” [92cm]
Back (from Stand-offs)	0” [0cm]
Side (from Stand-offs)	0” [0cm]
Floor* (See **Note**)	0” [0cm]
Minimum Ceiling / Enclosure Height (from bottom of fireplace)	72” [183cm] Natural Gas 72” [183cm] Propane
Top (from Stand-offs)	0” [0cm]
Adjacent Wall	0” [0cm]
Top of 90° Bend in minimum Enclosure	3-1/2” [8.9cm]
Top of 90° Bend inside Enclosures above minimum height	3-1/2” [8.9cm]
VENTING SYSTEMS	
Top of Horizontal Pipe	1/1/2” [3.8cm]
Side & Bottom of Horizontal Pipe	1” [2.5cm] All Vent Systems
Vertical Vent Pipe	1” [2.5cm] All Vent Systems

***Note:** If appliance is installed directly on carpeting or other combustible material other than wood flooring, a metal or wood panel extending the full width and depth of the appliance must be used. Carpet may extend 1 inch above the floor of the appliance.

Vinyl Flooring- Luxury Vinyl Plank (LVP), Luxury Vinyl Tile (LVT), and other vinyl flooring can be sensitive to radiant heat and changes in temperature. We recommend a minimum 12-inch hearth should be installed, or the fireplace should be raised at least 24 inches above the floor. **The use of vinyl flooring is done at the installer’s risk.**

-Remove Ventilation Plates- See ***Removal of Vent Covers*** section.

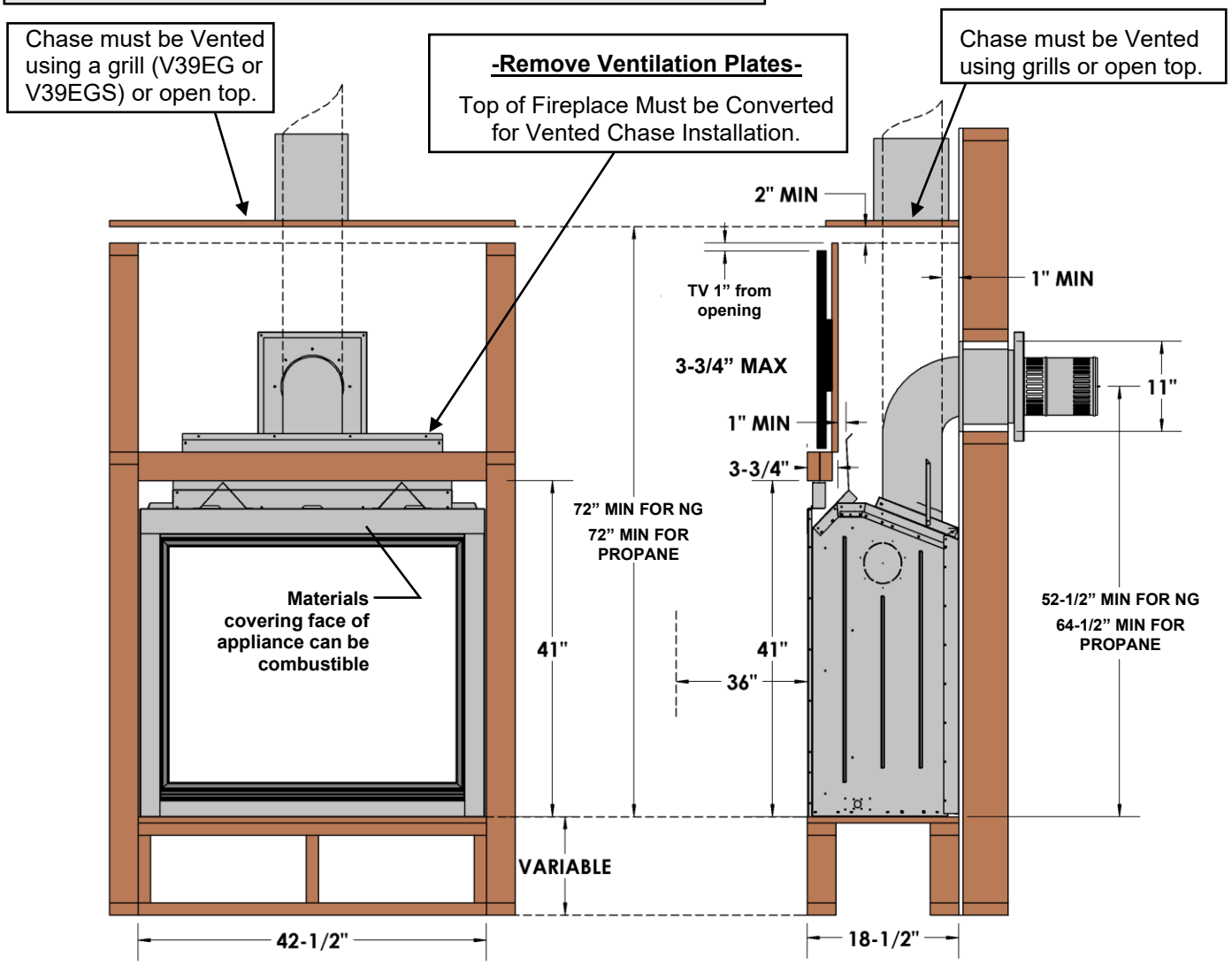

ZCV42 - Facing Requirements for Vented Chase -

Ventilation Plates must be removed before installation into a Vented Chase

Unit and Framing can be covered with a combustible i.e., drywall up to the fireplace opening.

NOTE:

- Fireplace chase must be vented at the top of the enclosure.
- Minimum Chase Height is 72” from bottom of unit.

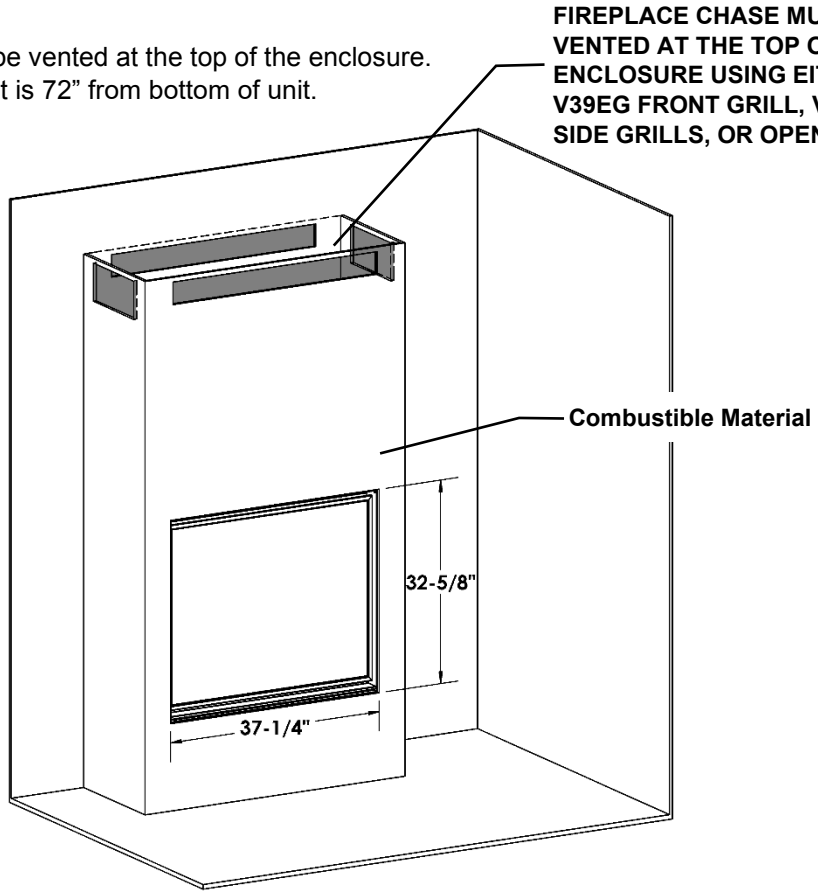

Ventilation Plates must be removed BEFORE installation into a Vented Chase.

See ***Removal of Vent Covers*** section in manual.

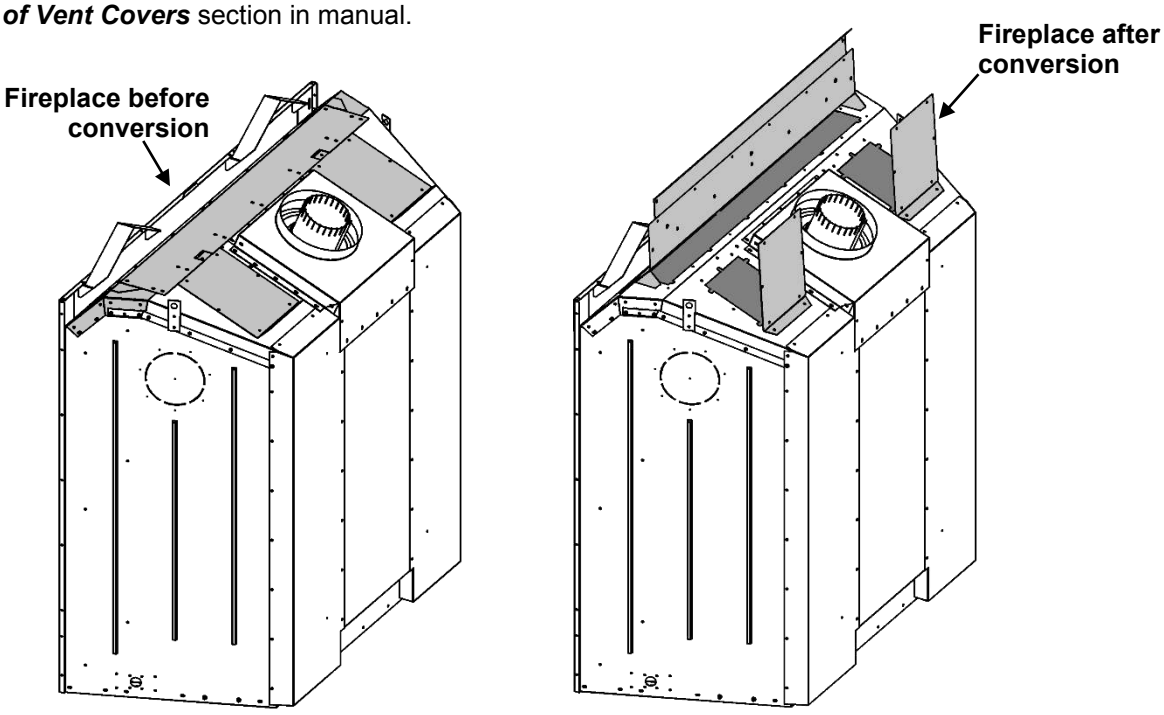

ZCV42 – Electrical Receptacle in a Vented Chase

ELECTRICAL WIRES IN CHASE MUST BE PROPERLY ATTACHED TO INSIDE WALL OF CHASE. DO NOT RUN WIRES DIRECTLY ABOVE APPLIANCE. Please follow the current CSA C22.1 Canadian Electrical Code or the National Electrical Code; ANSI/NFPA 70 when installed in the United States.

An electrical receptacle may be located in the front of a vented chase if the following guidelines are adhered to:

- Receptacle must be located between 37-5/8” and 56-15/16” from the bottom of the appliance.
- The overall depth of the receptacle box must not be more than 4-1/16” from the face of the appliance.
- Wiring must be properly attached to the inside wall of the chase. Do not run wires directly above the appliance.
- Wires run to the back of the chase must not be more than 18” above the bottom of the unit.

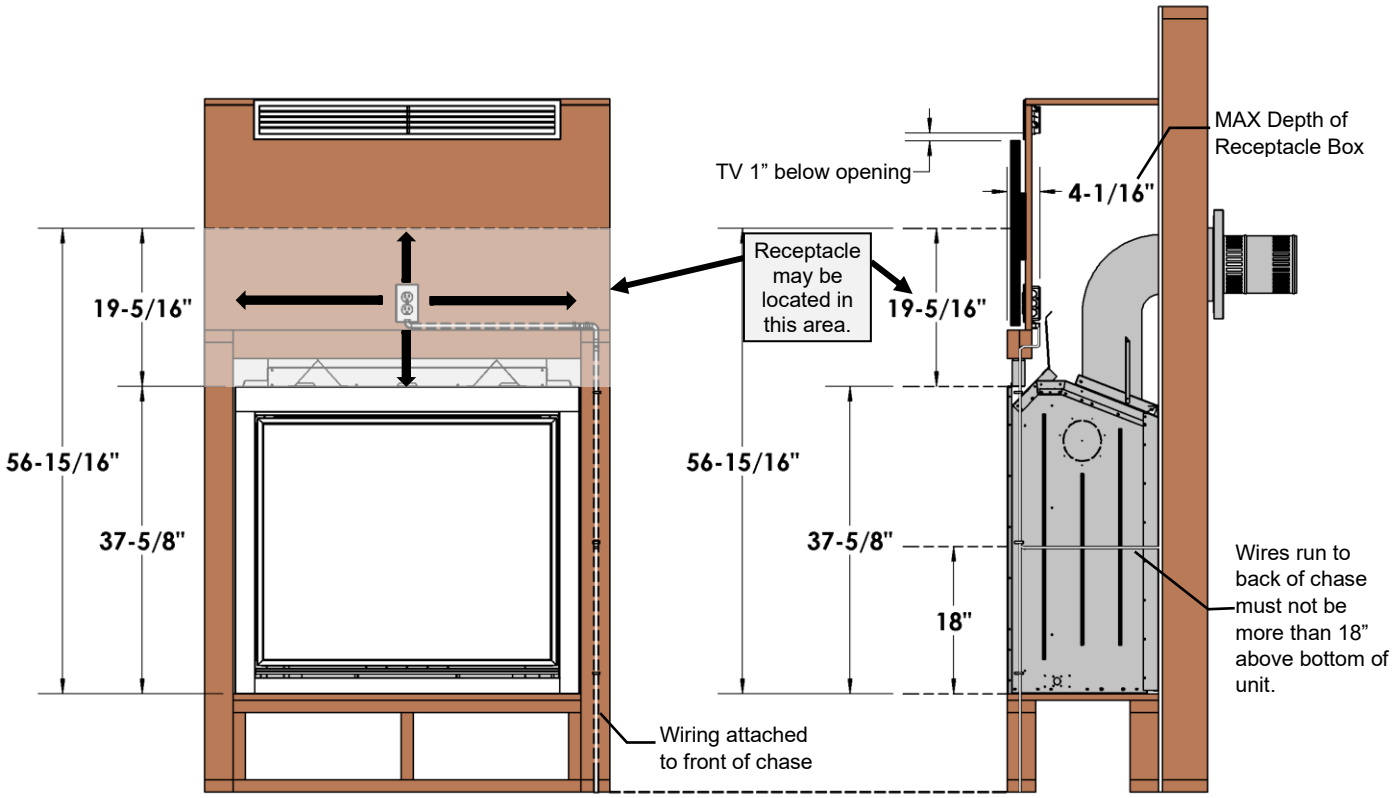

Rear Views of Chase:

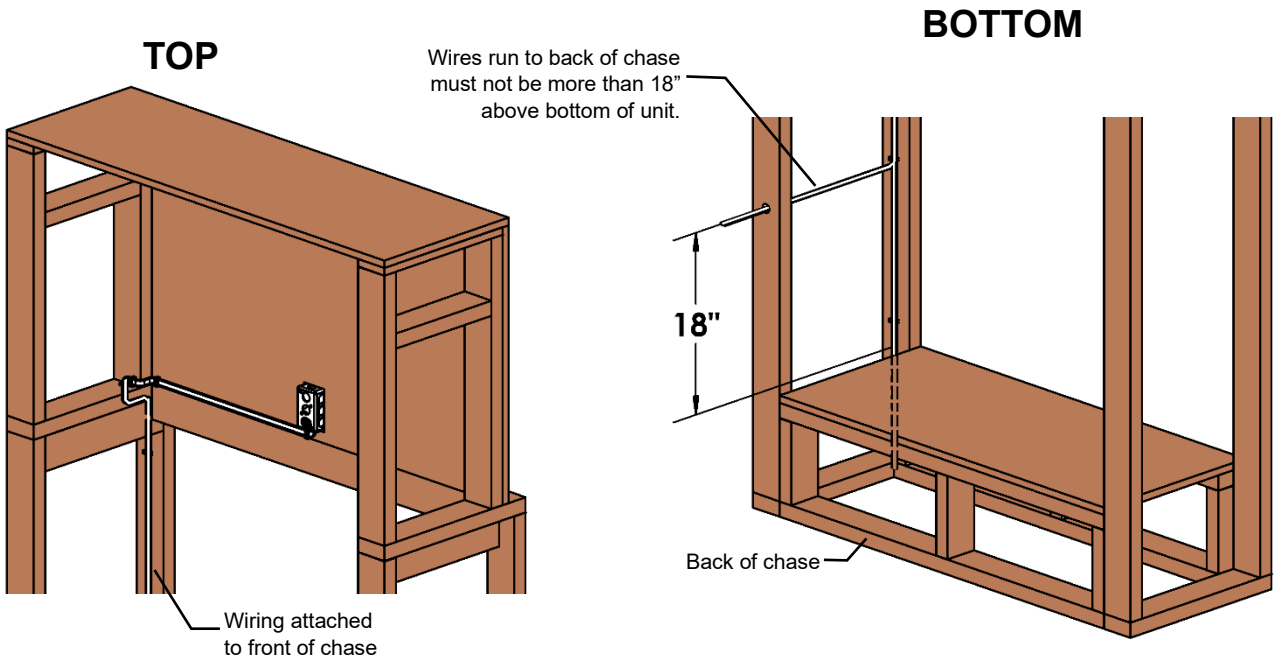

ZCV39/42/48 MCVST42 -CSS3 Screen Installation- November, 2026

⚠**WARNING: Wait until unit is COMPLETELY cool before attempting to install or remove Safety Screen.**

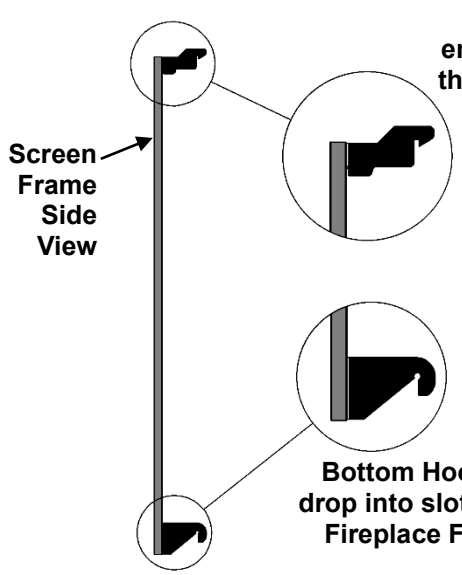

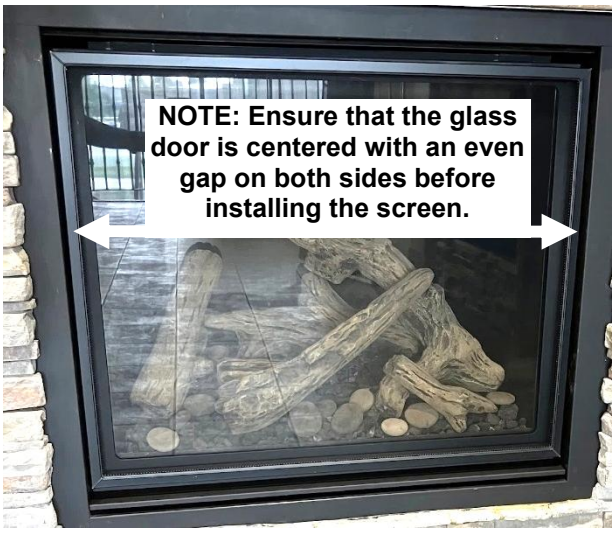

1. Locate Slots at bottom corners of the Fireplace Frame (Note: Door is removed for clarity).

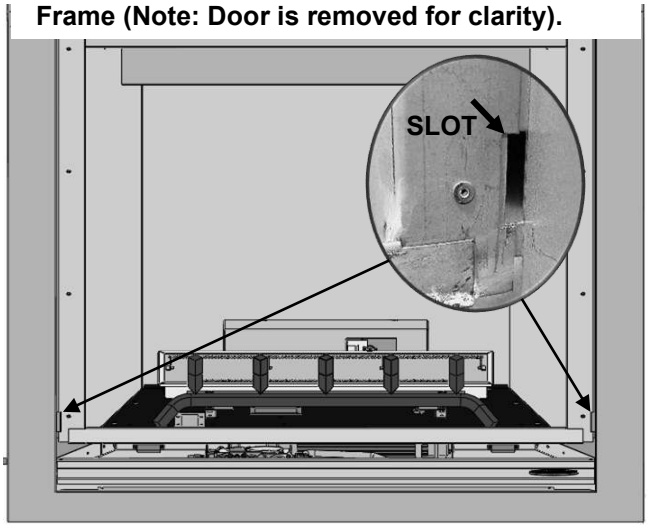

4. Engage Bottom Hooks into Slots.



3. Raise the Screen and Engage the Top Hooks onto the top of the Fireplace Frame.

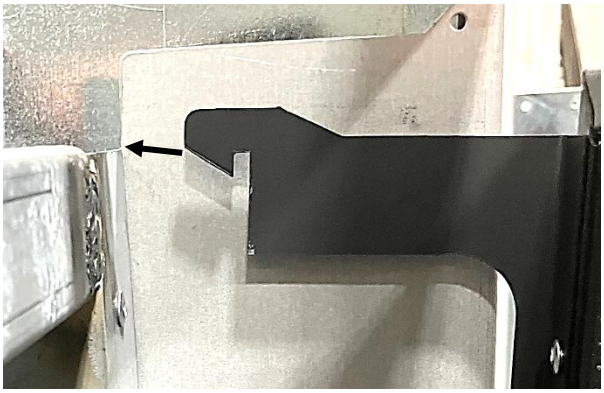

2. Top view of Engaged Top Hook.



<u>To remove Safety Screens:</u> WAIT UNTIL FIREPLACE IS COMPLETELY COOL.
Lift screen to disengage the Top Hook. Lower the screen and pull the Bottom Hooks out of the Frame Slots.

ZCV39/42/48 Bentley Inside Fit Screen Series 2 Installation -Shipped with unit after July 2024

⚠WARNING: Wait until unit is COMPLETELY cool before attempting to install or remove Safety Screen.



1. **Remove the Access Panel. Place the bottom of the screen onto the Access Panel Bracket and push the screen frame inward until it stops, as shown below. When the screen is lifted, the bottom hooks will be engaged.**

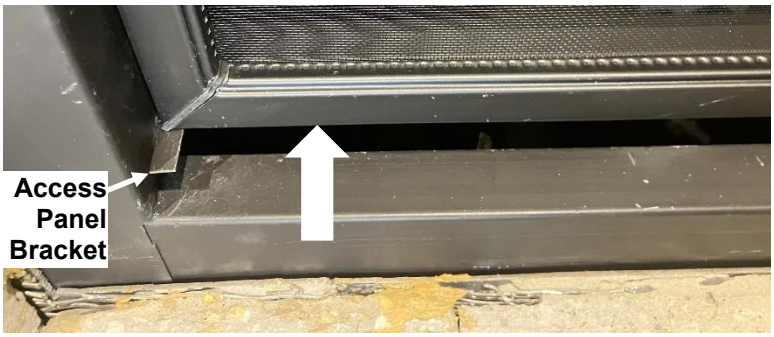

REAR VIEW

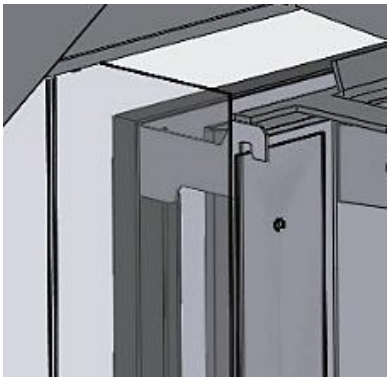

2. **Lift the screen up and hook the top onto the flanges at the sides of the glass door frame (see right). Replace the Access Panel.**

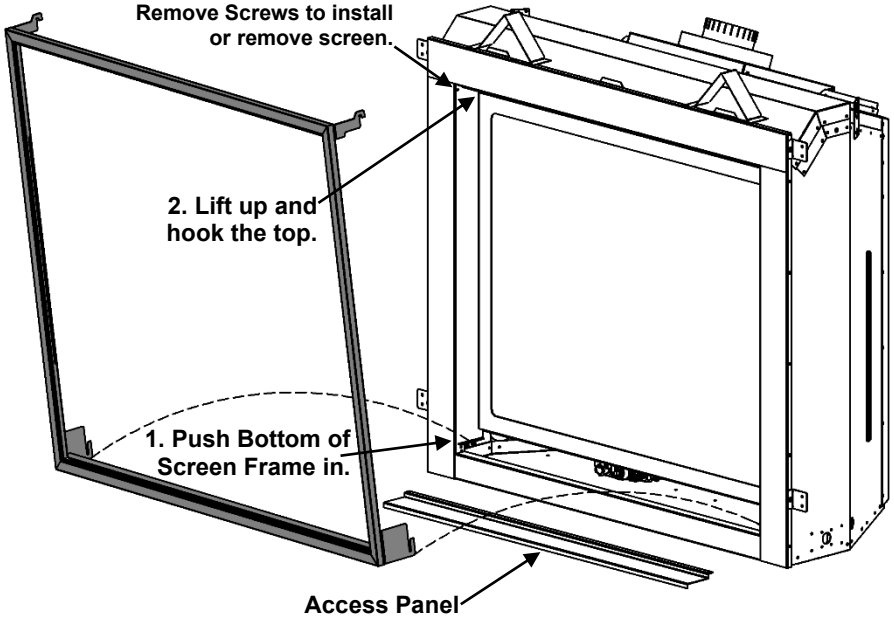

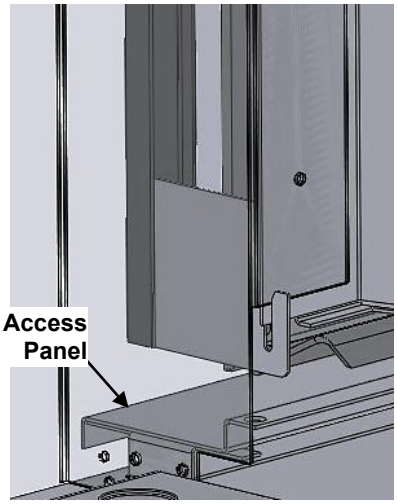

<u>To remove Safety Screens:</u> WAIT UNTIL FIREPLACE IS COMPLETELY COOL.

Remove Access Cover. Lift screen to unhook the top, and drop screen frame down onto Access Panel Brackets. Pull screen away from fireplace.

ZCV 39 / 42 / 48 Surround Installation

ZCV39S1 / ZCV39S1PF / ZCV39S2PF / ZCV42S1 / ZCV42S1PF / ZCV47S1

For S1/ S1PF Surrounds:

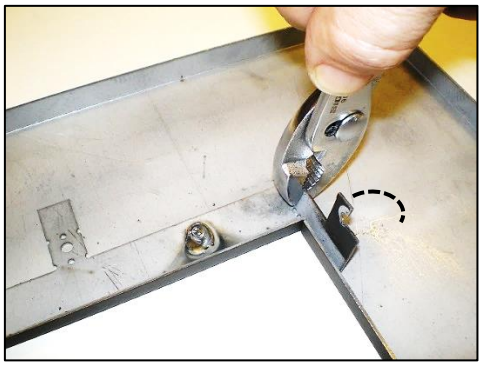

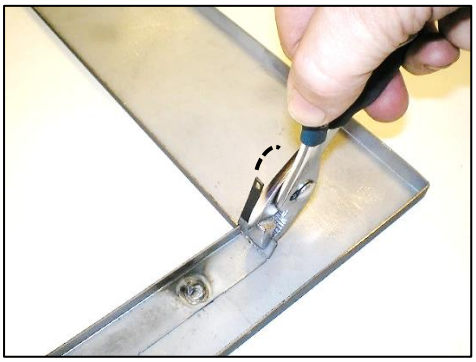

Place surround face down on protected surface. Bend Top Hook and Lower Mount Tab up 90° from surface.

For S2PF Surrounds:



Bend down Screen Tabs on Top and Bottom of Surround.



Fold Mount Tabs up 90°



Install Upper Hooks and Lower Tabs.

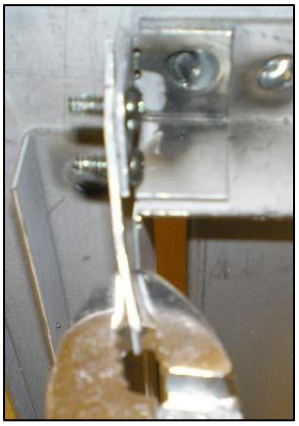

Bend Upper Hooks and Lower Tabs slightly inward.

For All Surrounds:

1. Back off screws in top inside corners of fireplace Frame until about 1/8" of thread is exposed. Remove Access Cover. Completely remove screws from lower inside corners of fireplace frame.

2. Push top of surround up against fireplace and hook onto screws in side frame. Push down to lock in place.

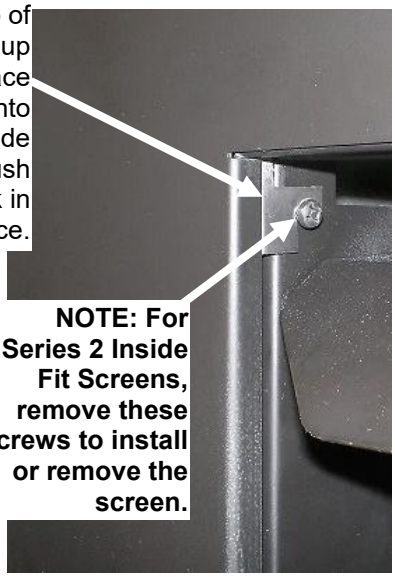

NOTE: For Series 2 Inside Fit Screens, remove these screws to install or remove the screen.

3. Swing Lower Tab Mount into frame of fireplace below Access Panel support bracket. Insert screws and tighten. Replace Access Cover.



To remove Surround, **WAIT UNTIL FIREPLACE IS COMPLETELY COOL.** Push up at center of Surround Frame and pull bottom away from fireplace.

ZCV39 / ZCV42 Basic Finishing for S1 or S1PF Surround

Step One: Frame Fireplace with nailing tabs oriented as shown.



Step Two: Use Drywall to finish face of wall.
NOTE: Drywall will be flush with fireplace face.

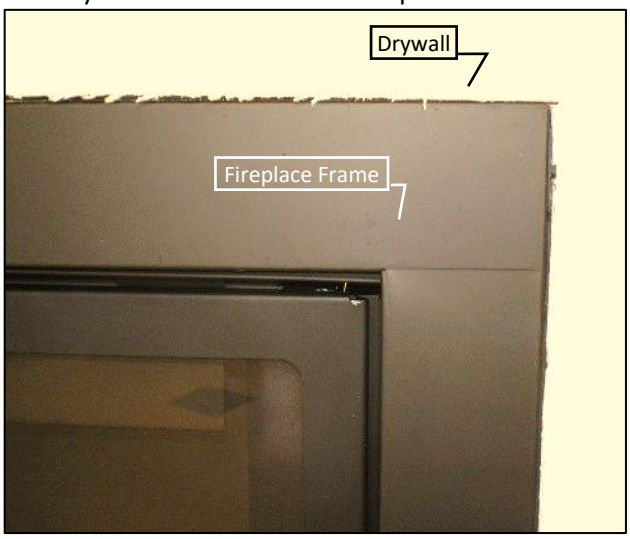

Step 3: Once wall is completely finished, Screen with Surround may be installed. Surround will conceal edges of fireplace.

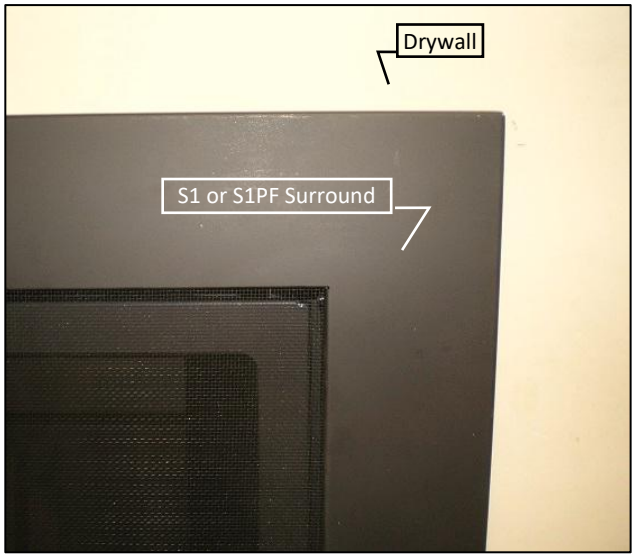

IMPORTANT NOTE!: If installing tile, brick, or other non-combustible material around the perimeter of the surround: you MUST Leave 4" of the face exposed around the fireplace opening, **plus an extra 1/16" exposed on the top when using outside fit screens.** This is to install and remove the surround. See drawings below. **A Tile Lip Kit is Available. Part No. ZCV-TLK**

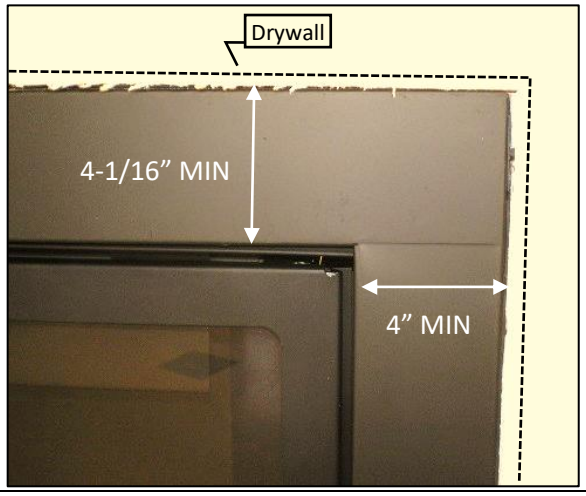

ZCV39

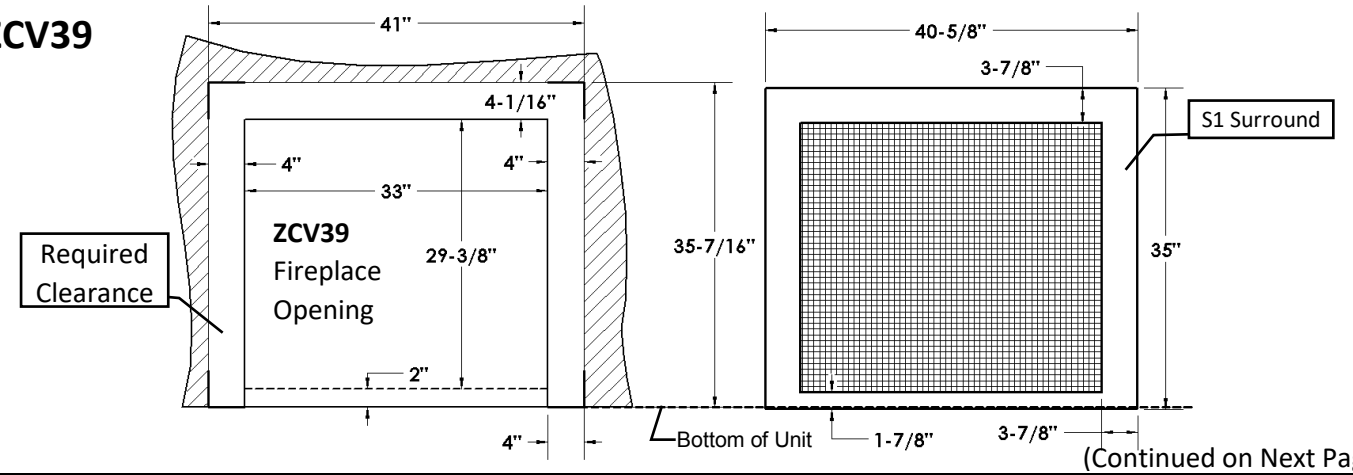

(Continued on Next Page)

ZCV39

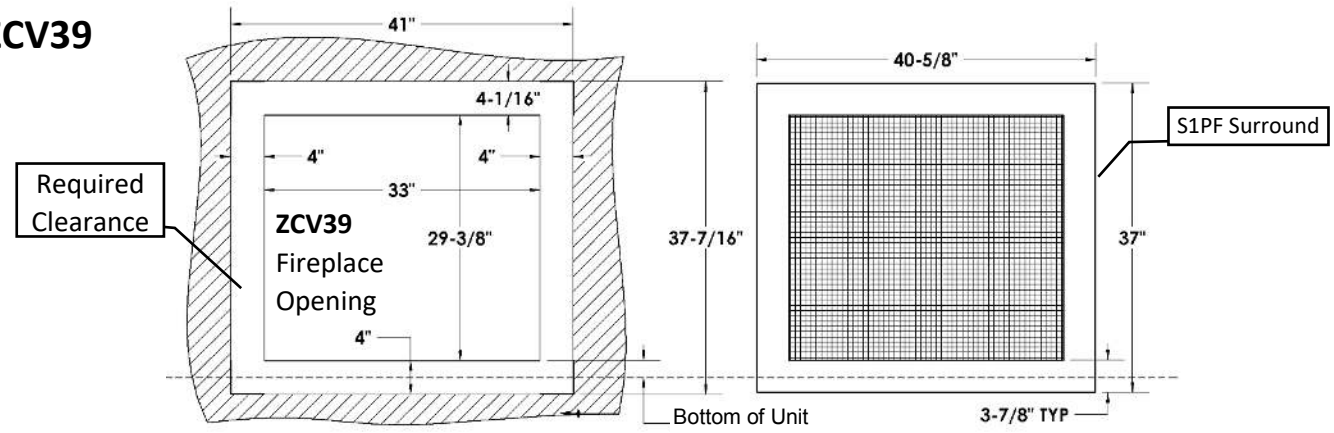

ZCV42

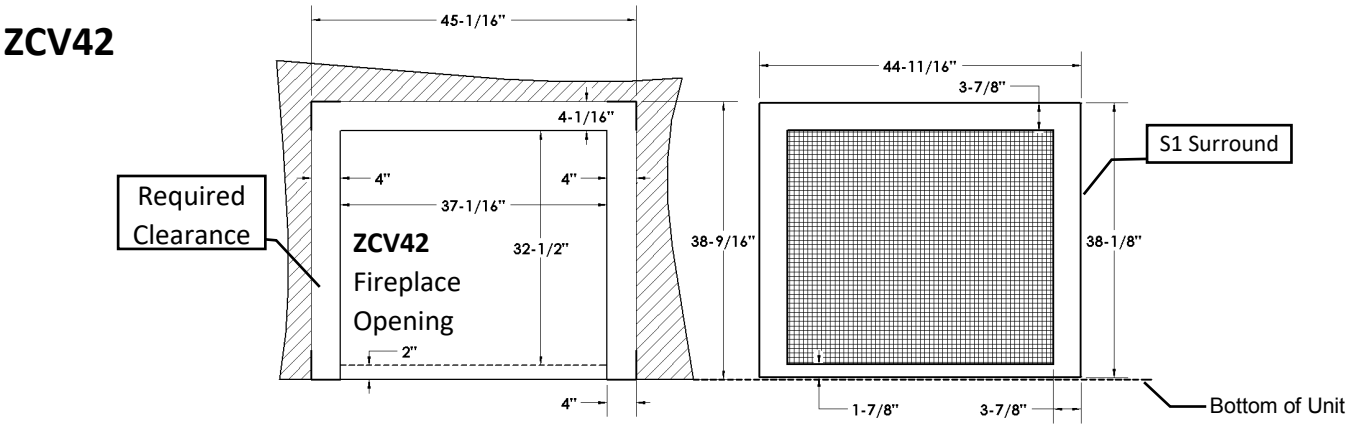

ZCV42

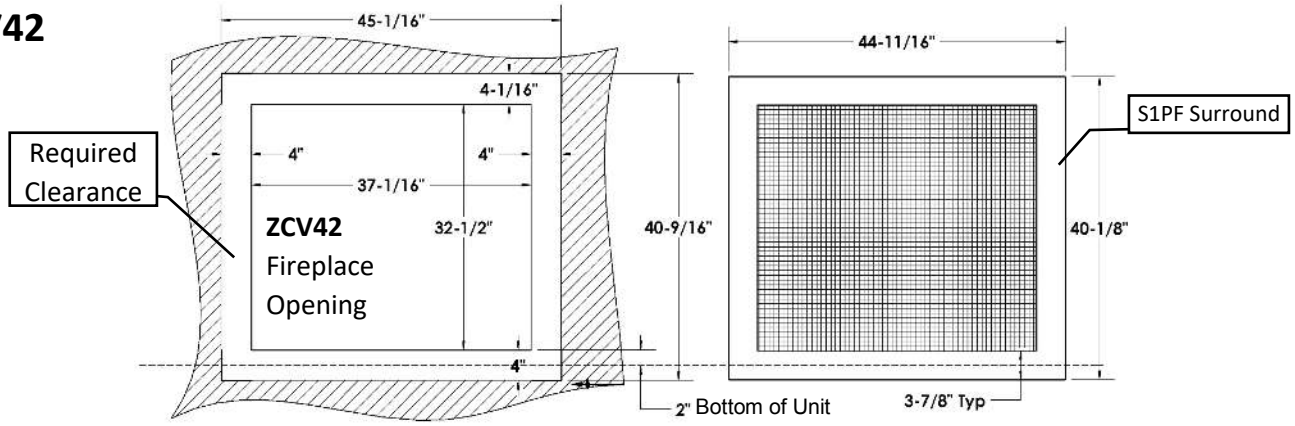

ZCV39S2PF Surround Dimensions

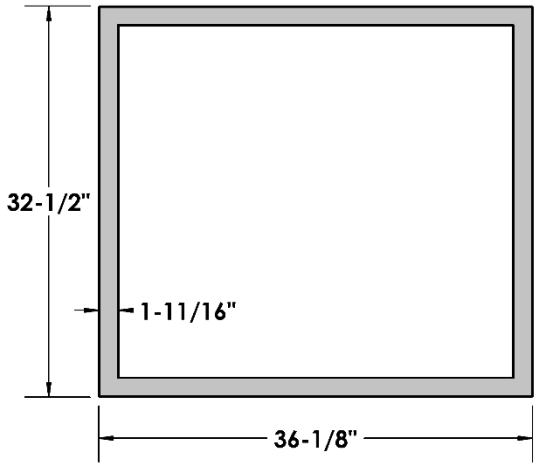

ZCV42S2PF Surround Dimensions

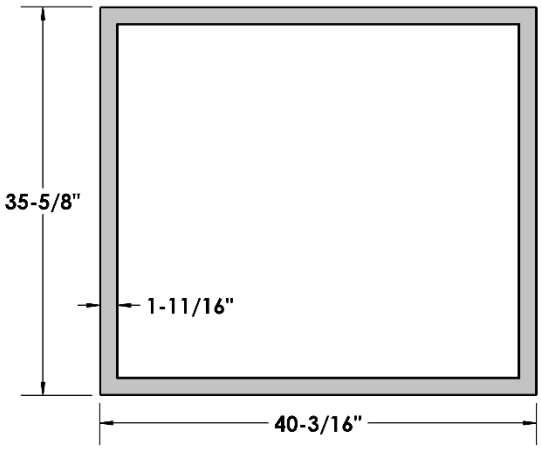

ZCV39 / ZCV42 Basic Finishing for S2PF Surround: Concrete Board Behind (3/4” Maximum Total Thickness)

Step One: Frame Fireplace with nailing tabs oriented as shown (flush with face of fireplace).

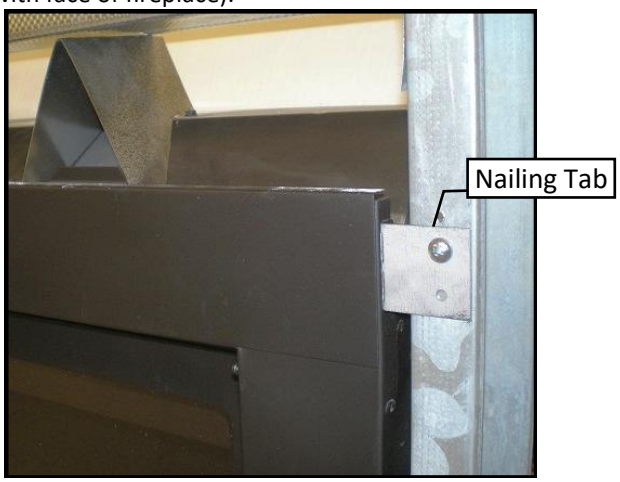

Step Two: Use Concrete Board to cover fireplace face. **NOTE:** Optional ZCV-TLK Tile Kit is available. Maintain clearances shown. See bottom drawings also.

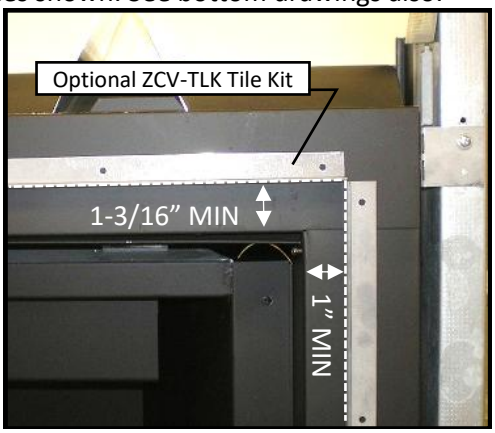

Step 3: Concrete Board with optional Tile Lip shown below.

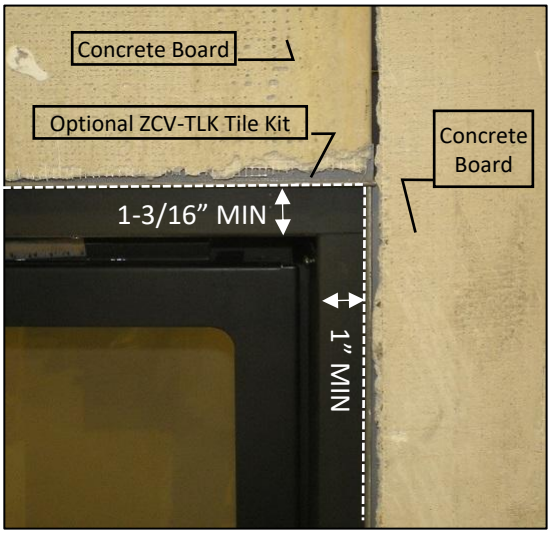

IMPORTANT NOTE!: If installing tile, brick, or other non-combustible material around the perimeter of the S2PF2 Surround, Maintain 1” clearance, plus an extra 3/16” on top when using an outside fit screen.

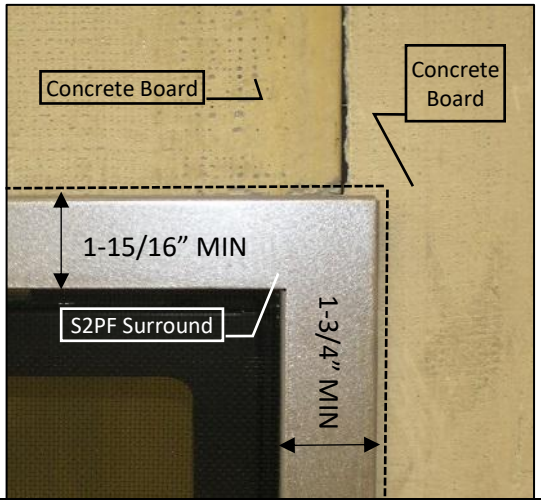

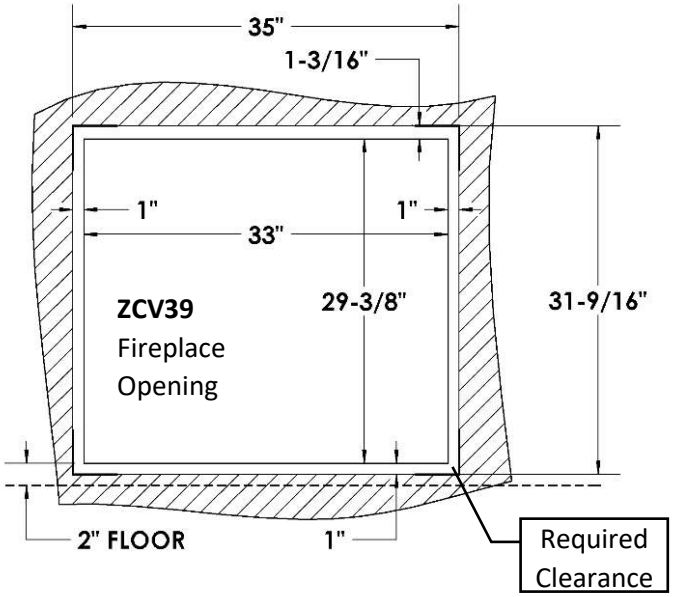

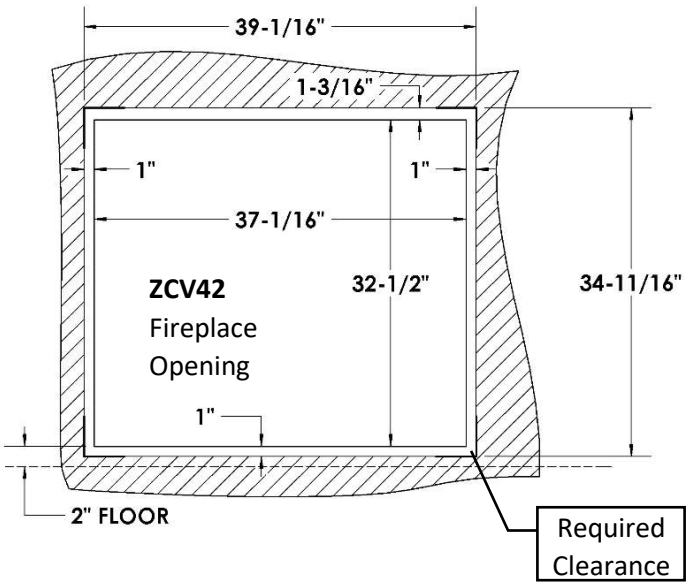

ZCV39 / ZCV42 Basic Finishing for S2PF Surround: Stone or Brick

Step One: Frame Fireplace with nailing tabs oriented as shown.



Step Two: Use Drywall to finish face of wall.
NOTE: Drywall will be flush with fireplace face.

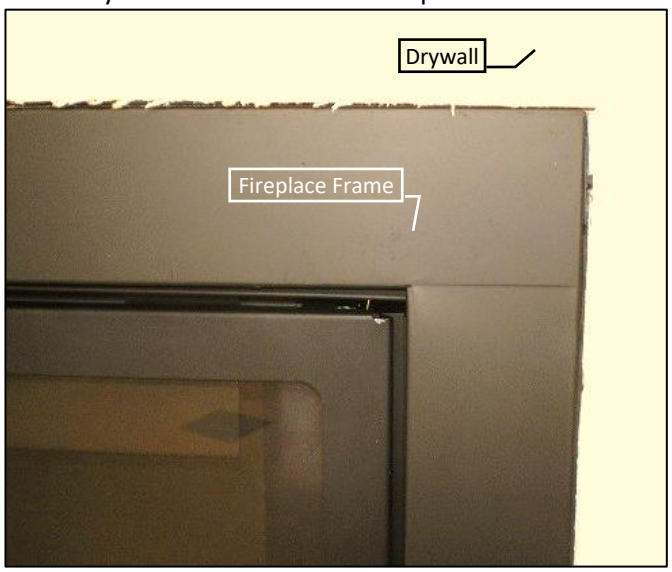

Step 3: A stone, brick, or other non-combustible border may be applied over fireplace face to conceal border.

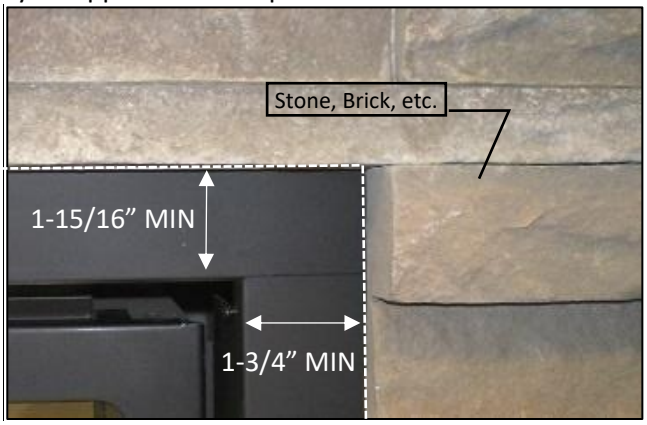

IMPORTANT NOTE!: If installing stone, brick, or other non-combustible material around the perimeter of the surround: you MUST Leave 1-3/4" of the face exposed around the fireplace opening, **and an extra 3/16" on top when using an outside fit screen.** This is to install and remove the surround. See drawings below. **A Tile Lip Kit (ZCV-TLK) is available.**

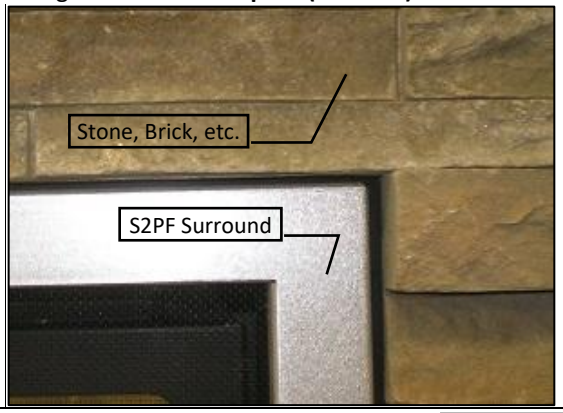

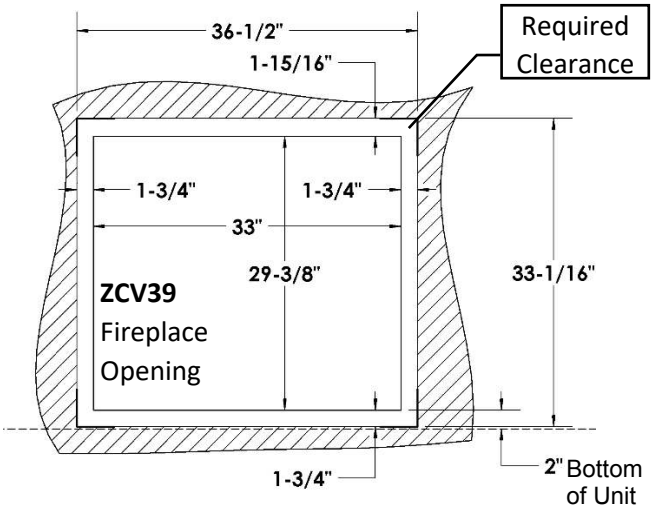

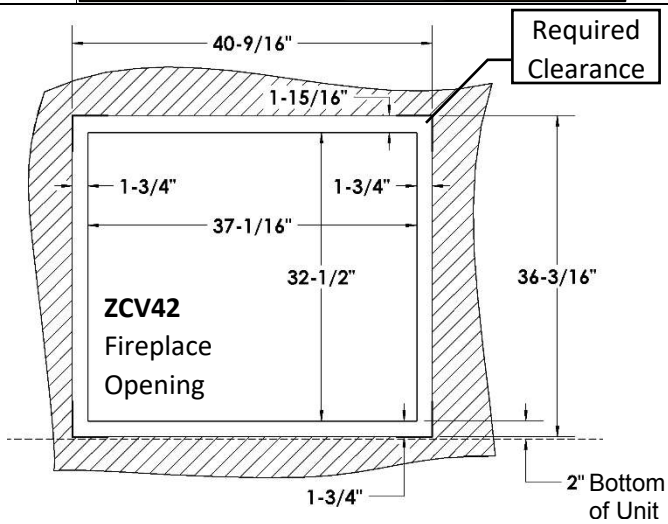

ZCV39 / ZCV42 Basic Finishing for S2PF Surround: Tile Border Behind (3/4” Maximum Total Thickness)

Step One: Frame Fireplace with nailing tabs oriented as shown.

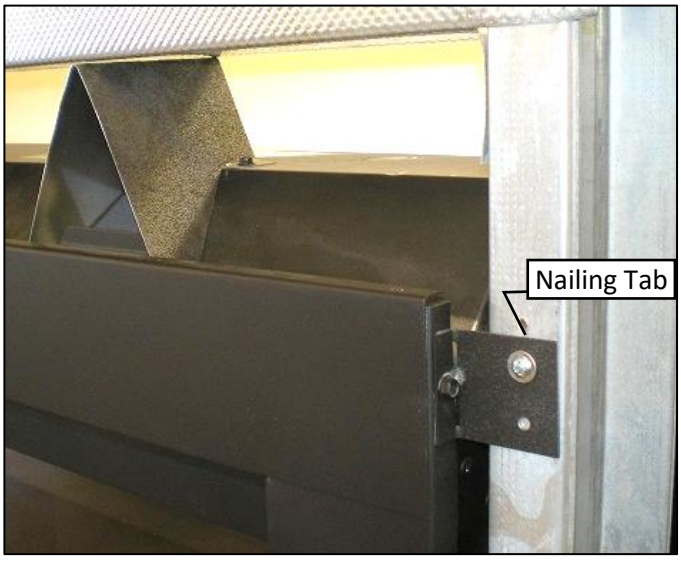

Step Two: Use Drywall to finish face of wall.
NOTE: Drywall will be flush with fireplace face.

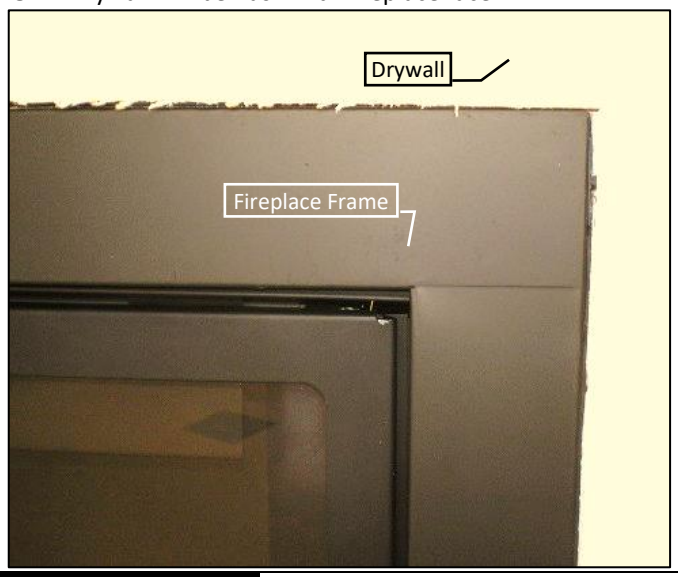

Step 3: A tile, brick, or other non-combustible border may be applied over fireplace face to conceal border.

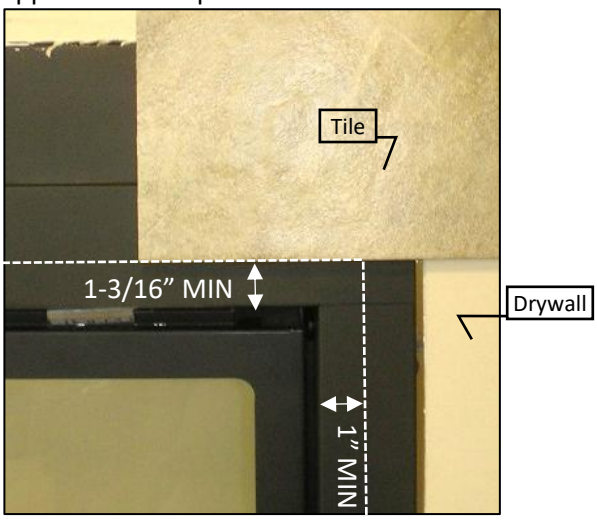

IMPORTANT NOTE!: If installing tile, brick, or other non-combustible material around the perimeter of the surround: you MUST Leave 1” of the face exposed around the fireplace opening, **plus an extra 3/16” on the top when using outside fit screens.** This is to install and remove the surround. See drawings below. **A Tile Lip Kit (ZCV-TLK) is available.**

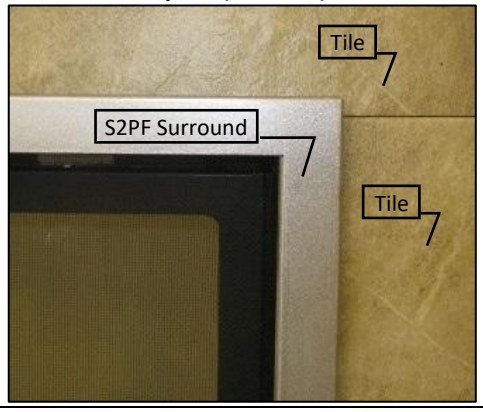

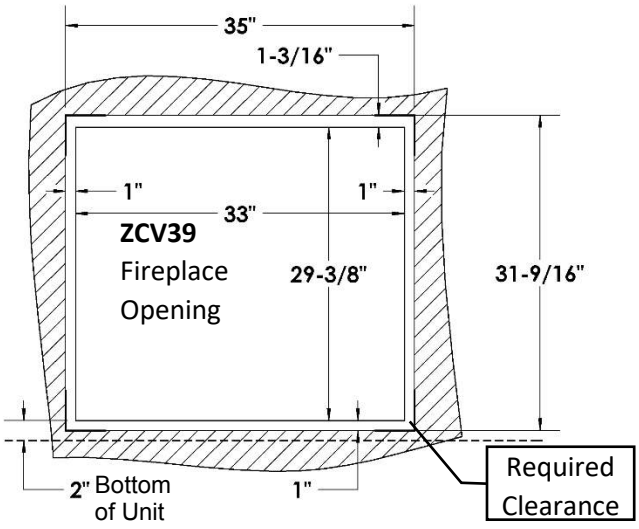

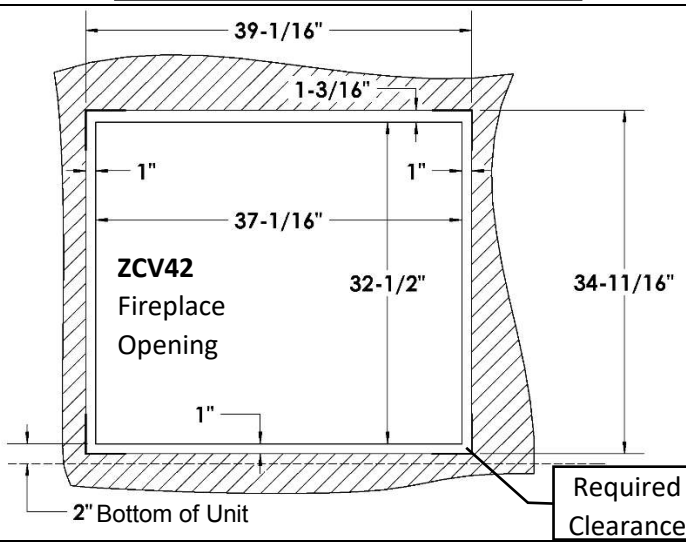

ZCV39 / ZCV42 Basic Finishing for MQ39DD / MQ42DD Doors: Stone, Brick, or Tile Border

Step One: Frame Fireplace with nailing tabs oriented as shown.



Step Two: Use Drywall to finish face of wall.
NOTE: Wall will be flush with fireplace face.

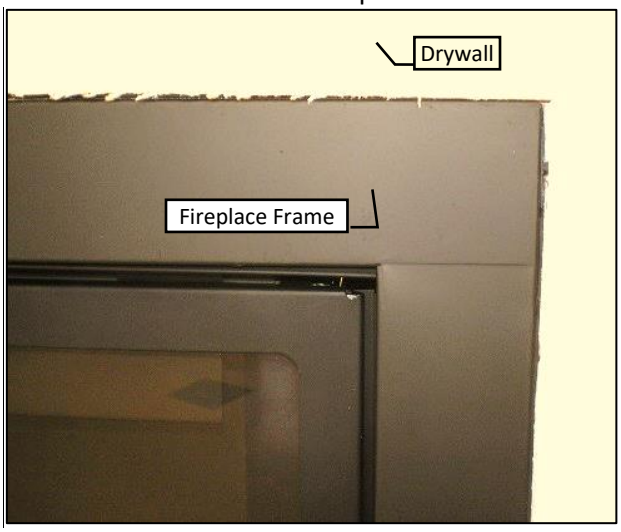

Step 3: A stone, brick, or other non-combustible border may be applied to the wall. Maintain clearances from fireplace opening below.

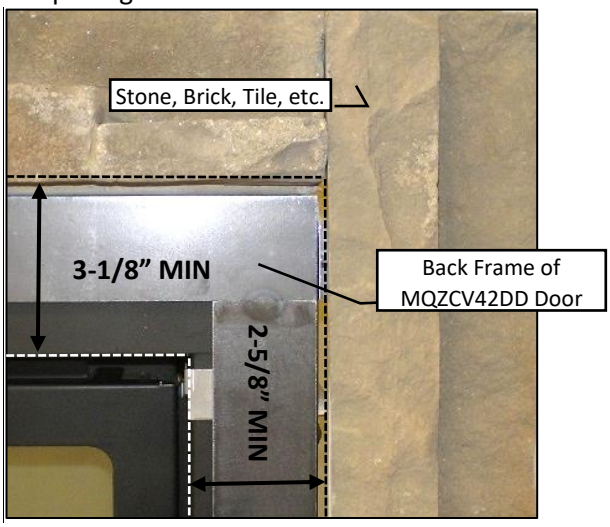

IMPORTANT NOTE! When installing stone, brick, or other material around the perimeter of the surround:
You MUST Leave 2-5/8" of the fireplace face exposed around the fireplace opening on the Sides, 2" at the Bottom, and 3-1/8" must be exposed on the top. This is to install and remove the Door Frame. See drawings below.
A Tile Lip Kit (ZCV-TLK) is available.



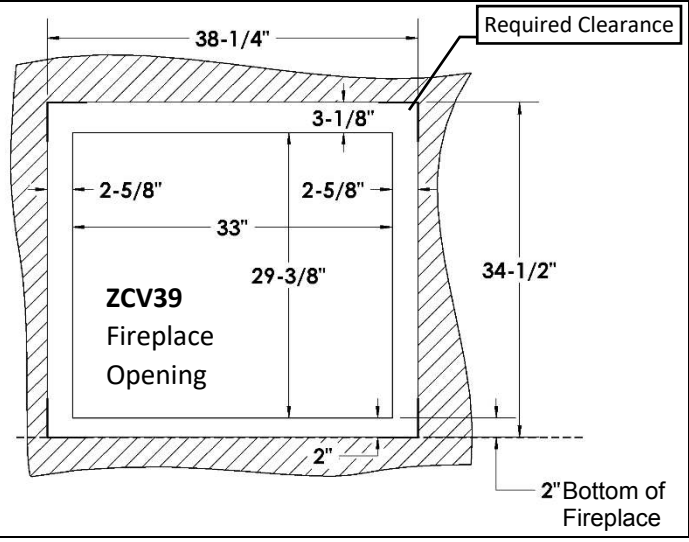

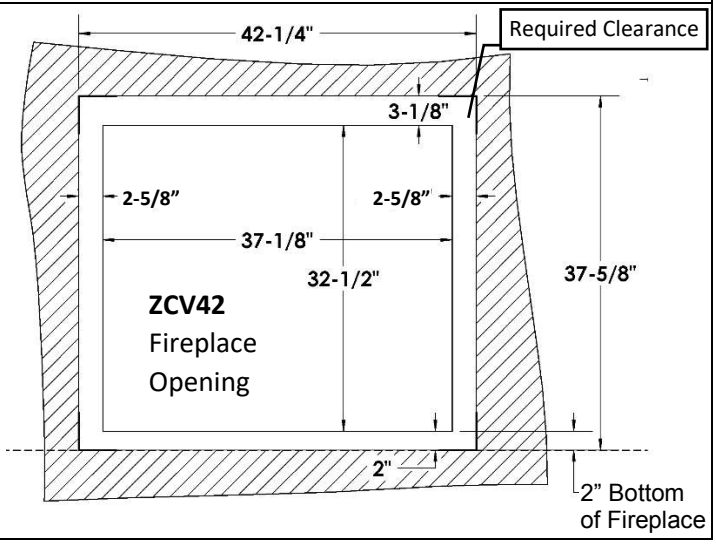

(Continued)

MQ39DD-Doors

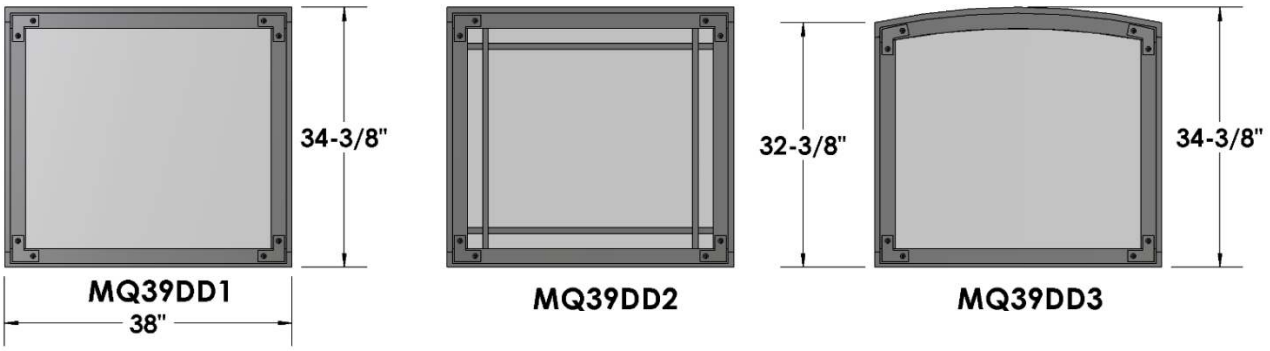

NOTE: When a DD Door c/w Safety Screen is used, the original Safety Screen supplied with the fireplace is not required.

MQ42DD-Doors

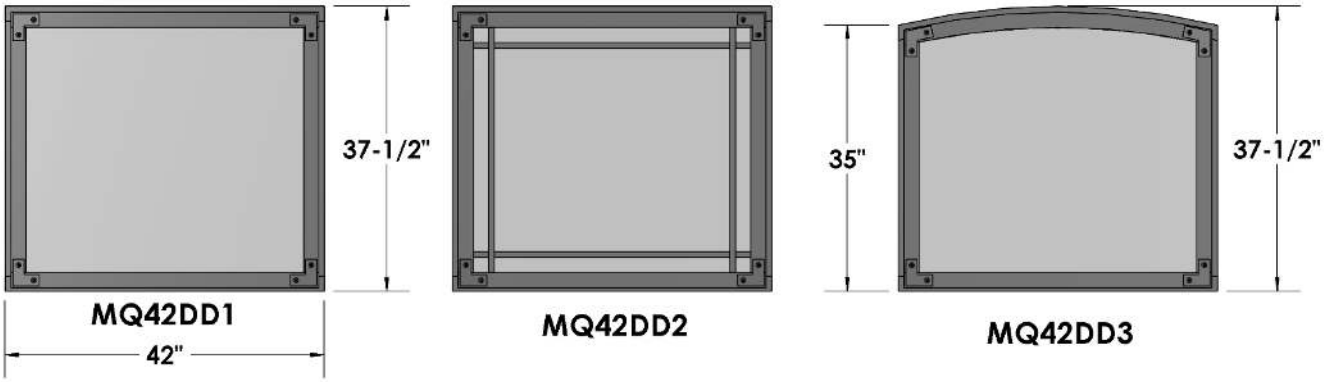

1/2” Clearance is Required for Door to Open

All DD Doors are flush with bottom of appliance.

⚠ NOTE

FINISHED AREA IN FRONT OF FIREPLACE (FLOOR, HEARTH, ETC.) MUST BE FLUSH WITH BOTTOM OF FIREPLACE WHEN USING DESIGNER DOORS.

INSTALL BACK FRAME OF DESIGNER DOOR ONTO FIREPLACE BEFORE FINISHING THE FIREPLACE.

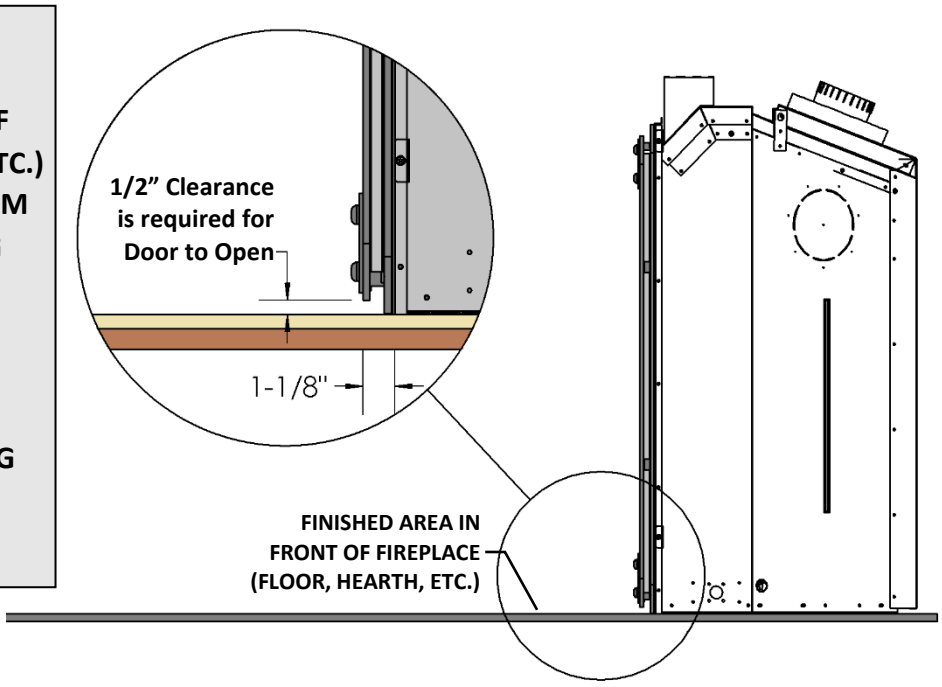

MQZCV39DD / MQZCV42DD Designer Door Installations

Each Kit contains: Back Frame, Front Frame, and Screen.

- If protruding facing materials (i.e., concrete board, brick or tile) are to be used, refer to ***Facing Material Dimension Requirements*** section.
- Designer Doors require a minimum 1/8" space on top and sides to allow for installation & removal.
- An optional Tile Lip Kit is available: ZCV-TLK. Follow instructions included with kit to use.
- Back frame can be installed and used as tile lip also.

To Assemble Designer Door:

1. Slide Screen into Front Frame.
2. Set Hinge Sockets on Front Frame onto Hinge Pins of Back Frame.

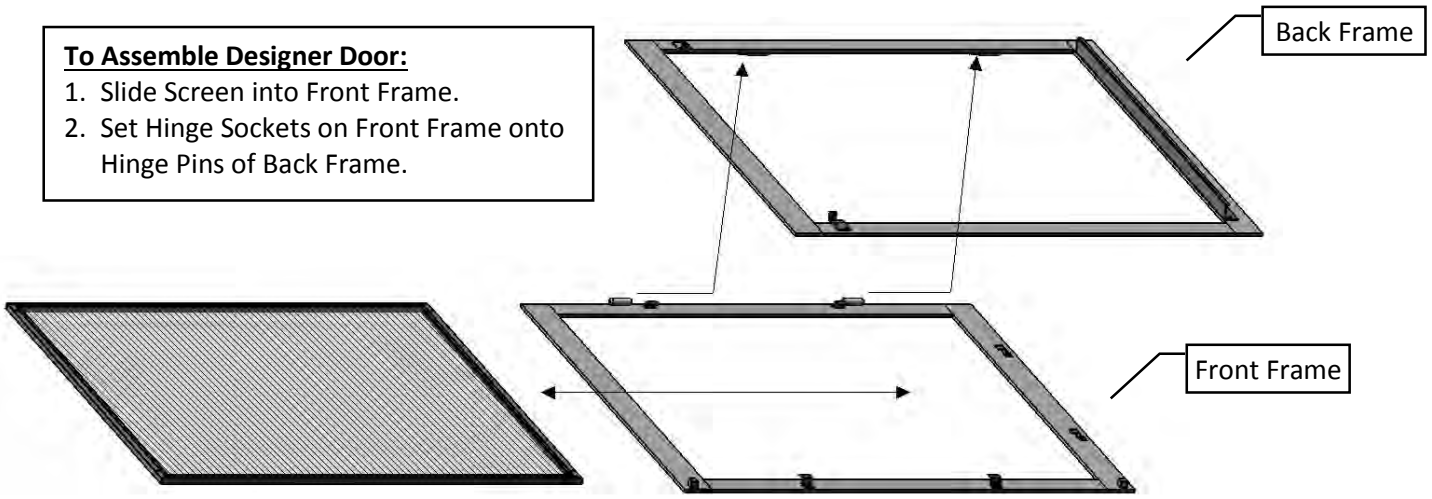

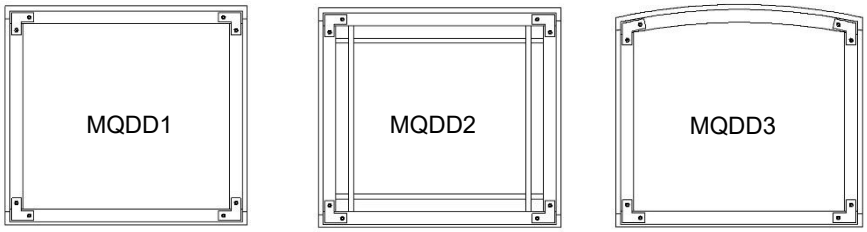

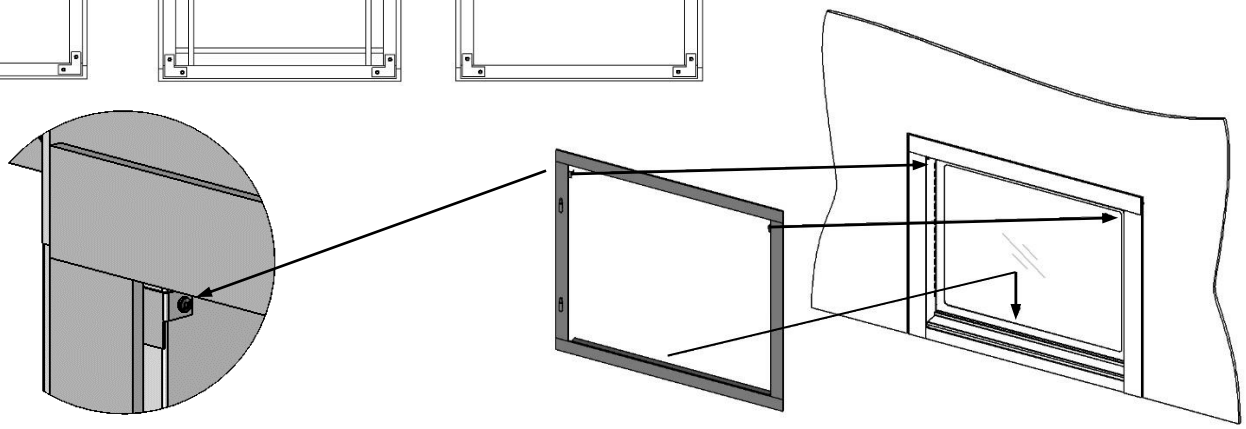

To Install Designer Door:

1. Remove Front Frame from Back Frame.
2. Set Back Frame onto Lower Ledge of fireplace below Access Panel.
3. Use Screws in top corners of fireplace frame sides to attach Back Frame to fireplace.
4. Insert Screen into Front Frame.
5. Set Hinge Sockets on Front Frame onto Hinge Pins of Back Frame.

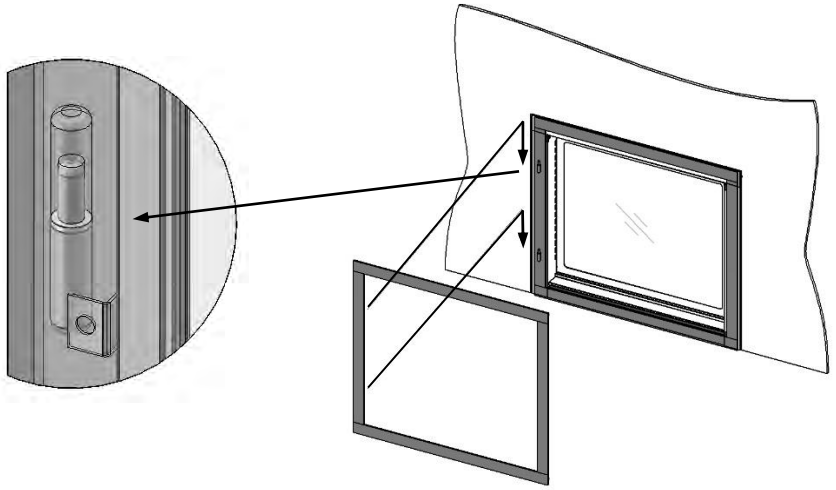

ZCV-TLK Tile Lip Kit



Contents of Kit: Qty. [4] Tile Lip pieces 47” long, Qty. [12] screws.

Instructions: Refer to the charts below to find your installation choice.
-Cut [2] tile lip pieces to height of sides, and [2] to length of top & bottom.
-Install onto face of fireplace so that screwing flange will be beneath facing materials.

NOTE: Pay close attention to minimum clearance from fireplace opening.

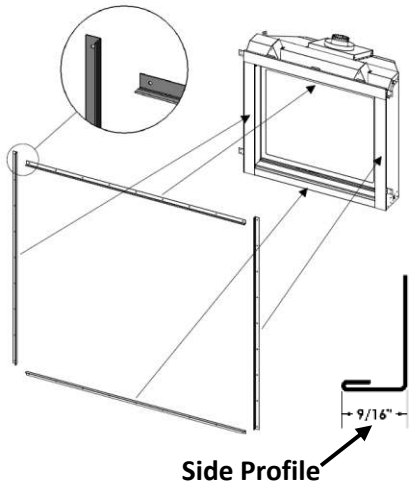

ZCV39

Fireplace Facing Choice	Height of Side Pieces	Side Clearance from Opening	Length of Top & Bottom Pieces	Top Clearance from Opening	Bottom Clearance from Opening
Inside Fit Screen Shipped with Fireplace after September 2022	**29-1/2”**	0”	**33-1/8”**	0”	0”
Outside Fit Screen Shipped with Fireplace until September 2022	**31-9/16”**	1”	**35”**	1-3/16”	1”
ZCV39S2PF Surround -with 1/2” thick facing material behind	**31-9/16”**	1”	**35”**	1-3/16”	1”
ZCV39S2PF Surround -Facing Materials Up to Edge of Surround	**33-1/16”**	1-3/4”	**36-1/2”**	1-15/16”	1-3/4”
ZCV39S1 Hearth Mount Surround	**35-7/16”**	4”	**41”** (Top Only Required)	4-1/16”	No Bottom piece required
ZCV39S1PF 4” Picture Frame Surround	**37-7/16”**	4”	**41”**	4-1/16”	4”
ZCV39DD Designer Door	**34-1/2”**	2-5/8”	**38-1/4”**	3-1/8”	2” (No Bottom piece required if installed at hearth level)

ZCV42 / MCVST42

Fireplace Facing Choice	Height of Side Pieces	Side Clearance from Opening	Length of Top & Bottom Pieces	Top Clearance from Opening	Bottom Clearance from Opening
Inside Fit Screen Shipped with Fireplace after September 2022	**32-5/8”**	0”	**37-1/4”**	0”	0”
Outside Fit Screen Shipped with Fireplace until September 2022	**34-11/16”**	1”	**39-1/16”**	1-3/16”	1”
ZCV42S2PF Surround -with 1/2” thick facing material behind	**34-11/16”**	1”	**39-1/16”**	1-3/16”	1”
ZCV42S2PF Surround -Facing Materials Up to Edge of Surround	**36-3/16”**	1-3/4”	**40-9/16”**	1-15/16”	1-3/4”
ZCV42S1 Hearth Mount Surround	**38-9/16”**	4”	**45-1/16”** (Top Only Required)	4-1/16”	No Bottom piece required
ZCV42S1PF 4” Picture Frame Surround	**40-9/16”**	4”	**45-1/16”**	4-1/16”	4”
ZCV42DD Designer Door	**37-5/8”**	2-5/8”	**42-1/4”**	3-1/8”	2” (No Bottom piece required if installed at hearth level)

Included with base model.

The 51-UHS is designed for millivolt and IPI units for in-unit installation of the Remote Receiver, Fan Control Module, and the IPI Module. 51-UHS can be inserted & removed from beneath fireplace through access panel opening (Remove glass door first). **NOTE: When using a remote control, the 51-UHS must be used.**

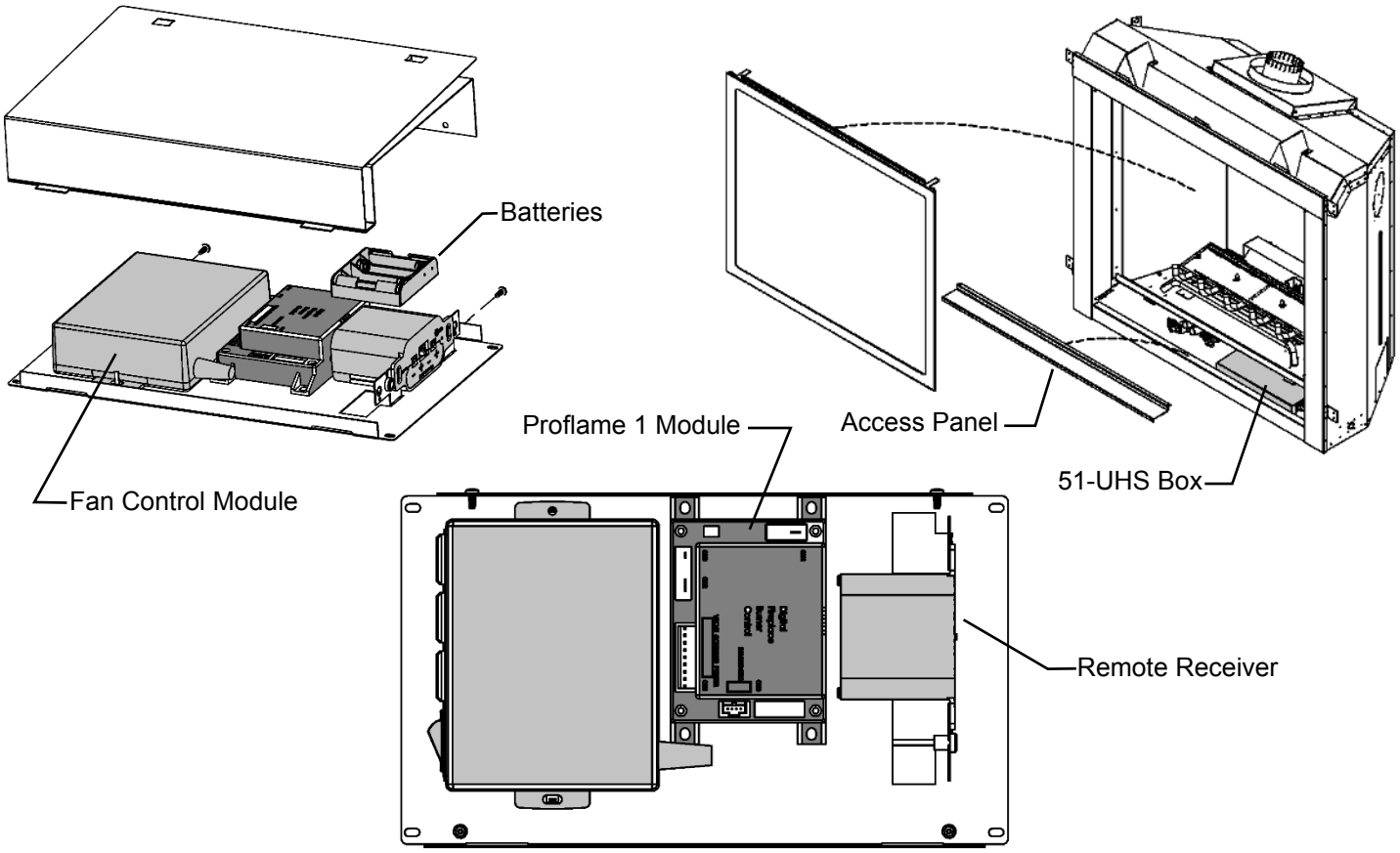

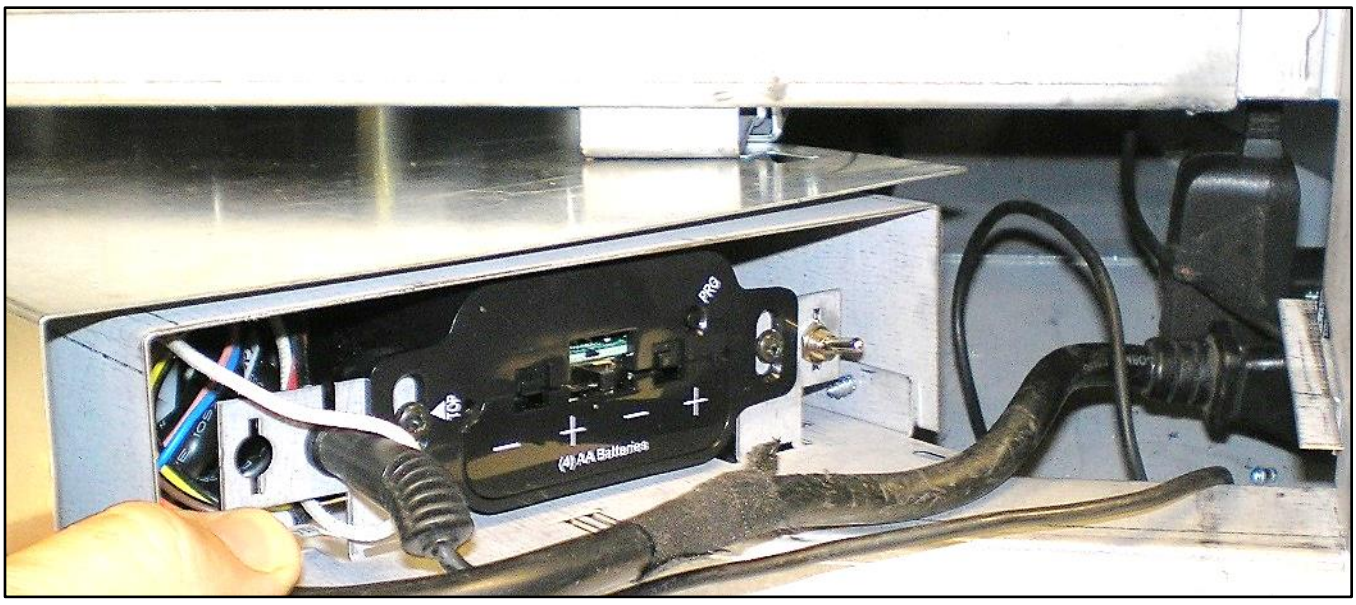

Millivolt and Proflame 1 Systems

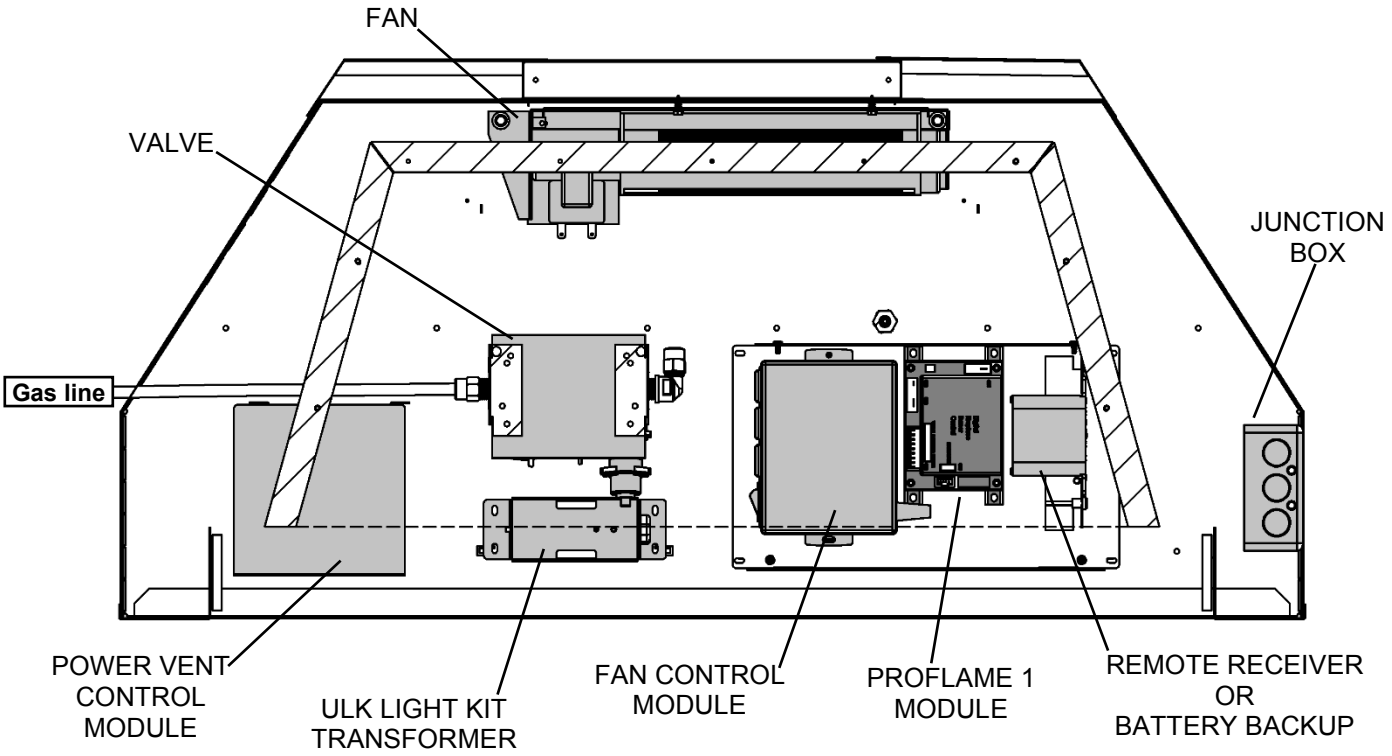

Proflame 2 Systems

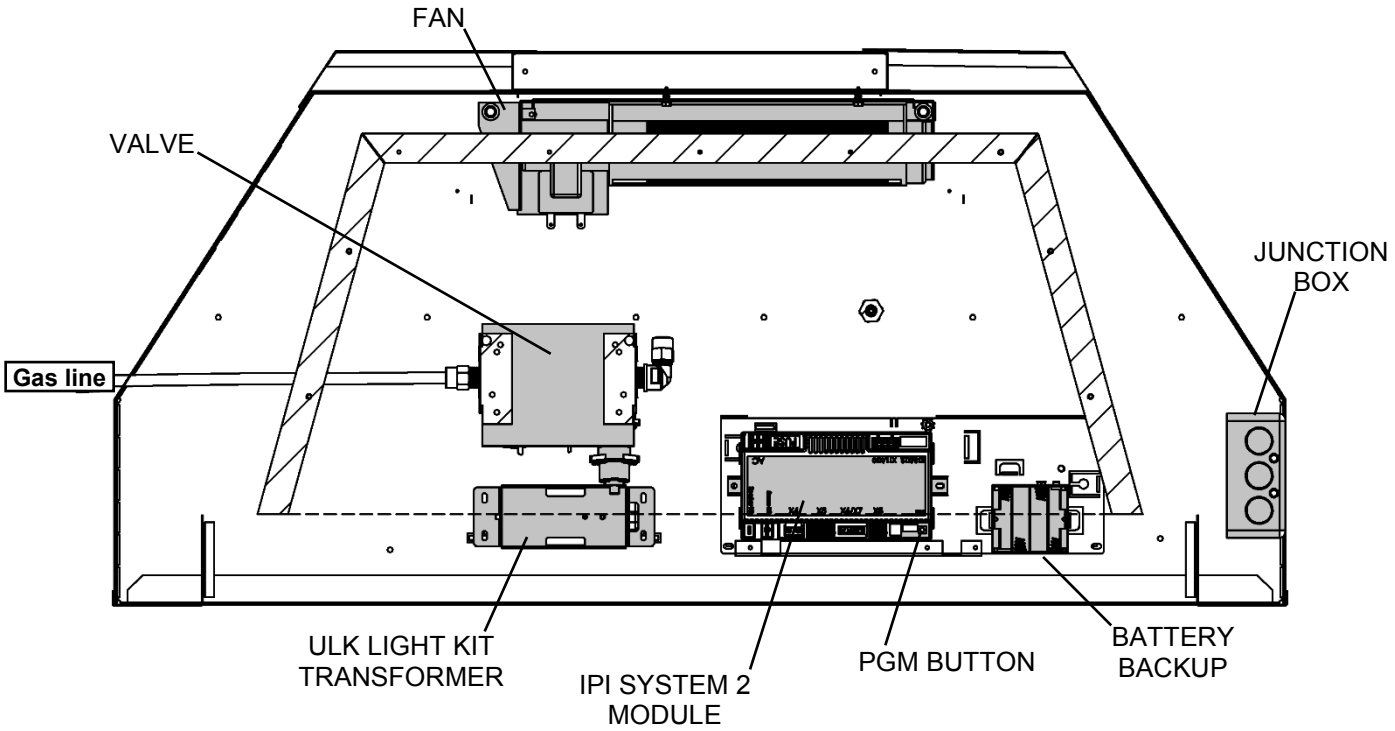

NOTE: The gas line connection may be made of 1/2" rigid pipe or an Approved Kingsman Flex Connector, such as FP15GC. Since some municipalities have additional local codes, it is always best to consult your local authorities and the current CAN/CGA - B149.1 or .2 installation code in Canada or the National Fuel Gas code ANSI Z223.1 in the U.S.A

ZCV39 / ZCV42 Z46FK Fan Kit Installation

The fan can be installed through the side of the fireplace.

If fireplace is already installed, the burner pan must be removed to install the fan (See Burner System Removal section).

⚠ WARNING

Electrical Grounding Instructions

This appliance is equipped with a three prong (grounding) plug for your protection against shock hazard and should be plugged directly into a properly grounded three-prong receptacle. Do not cut or remove the grounding prong from this.

Before Servicing

1. Ensure all power supply is shut off.
2. Label all wires prior to disconnecting when servicing control. Wiring errors can cause improper and dangerous operation.
3. For fan servicing: Vacuum and clean lint/dirt build-up on the fan blades and motor.
4. When resealing the Burner Pan, use Mill Pac.

To install the fan from the side of the unit, remove the two screws in the Fan Access Cover on the left side of the fireplace. Bend the cover up and pull bottom tab down. Insert fan through opening as shown.
Mount fan on tabs in bottom of fireplace. Connect fan as per wiring diagram below. Replace all components.

Fan Speed Control is located outside of fireplace. **Thermodisc** is Located under Burner pan.

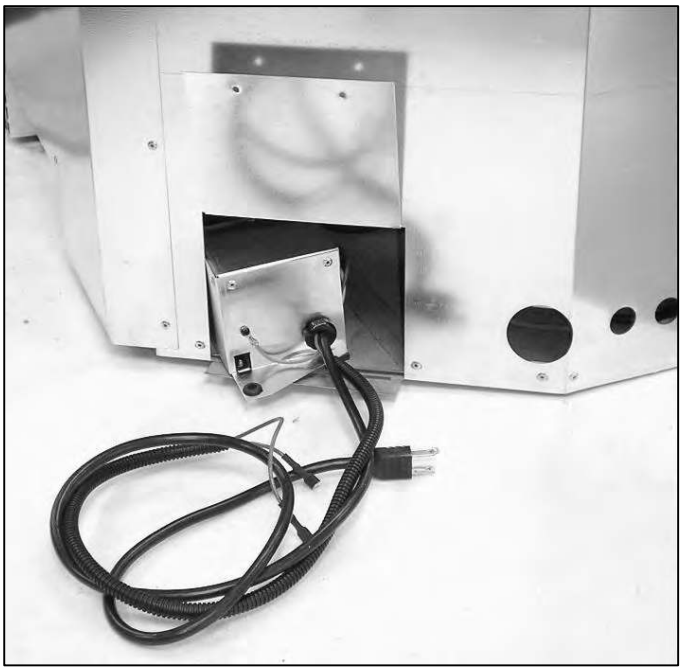

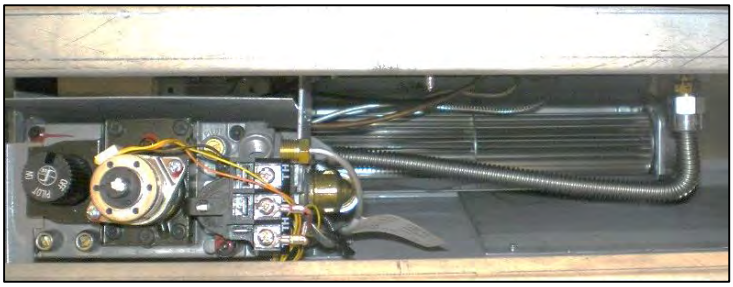

NOTE: Do not allow cords or wires to come into contact with the firebox or the underside of the burner pan.

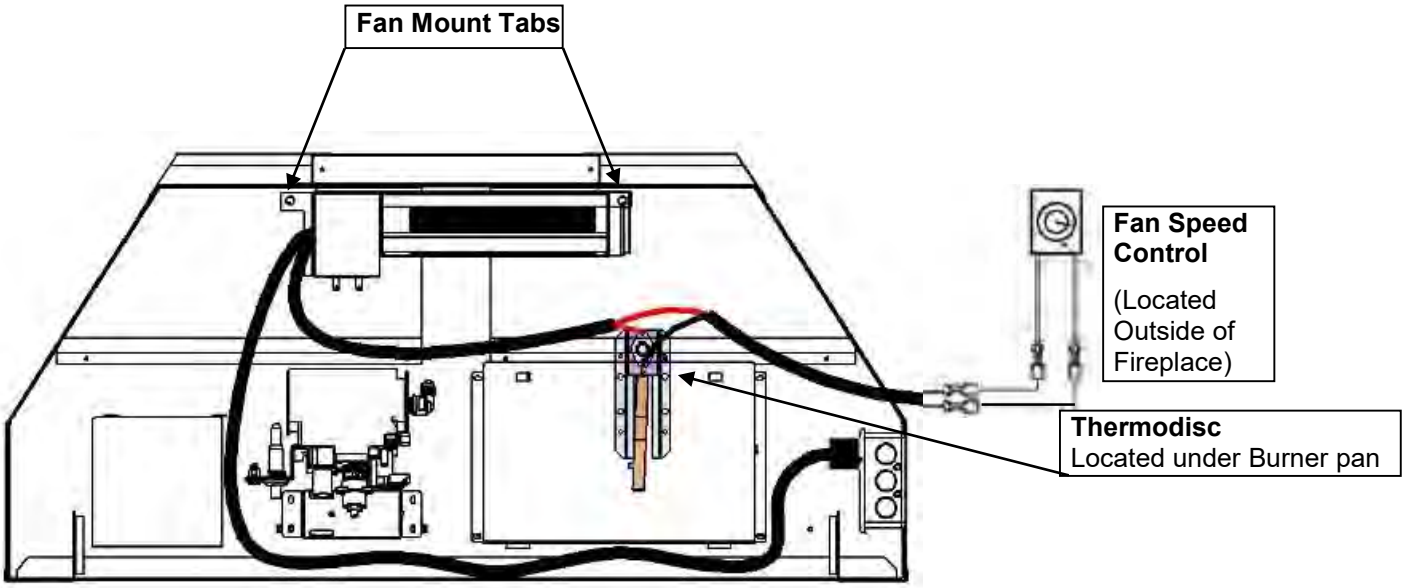

Split Receptacle- Fan Speed Control Outside of Fireplace

If you plan to locate the variable speed control switch for the fan outside of the fireplace and you require a constant source of AC power inside the unit for another accessory such as lights or an IPI valve system, follow one of the procedures below.

⚠WARNING	⚠WARNING	⚠WARNING
A qualified electrician must connect electrical wiring to junction outlet for built-in installation. **Follow all codes.**	Electrical Grounding Instructions – This appliance is equipped with a three – pronged (grounding) plug for your protection against shock hazard and should be plugged directly into a properly grounded three-prong receptacle.	Label all wires prior to disconnection when servicing controls. Wiring errors can cause improper and dangerous operation. Verify proper operation and servicing.

⚠**Caution**: Electrical installation to be done by a qualified installer. All wires must be connected and grounded in accordance with CSA Standard C22.1- Canadian Electrical Code part 1 or with the National Electrical Code, ANSI /NFPA 70 (latest edition) and /or in accordance with local codes.

Switch Controlled Split Receptacle With Switch At START Of Cable Run

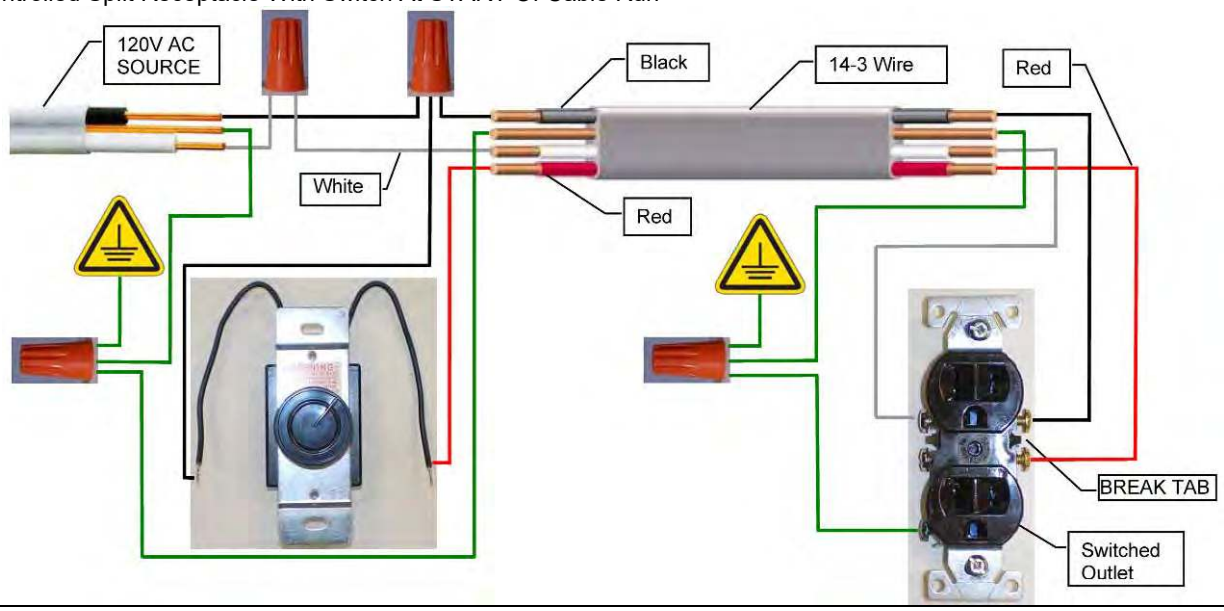

Switch Controlled Split Receptacle With Switch At END Of Cable Run

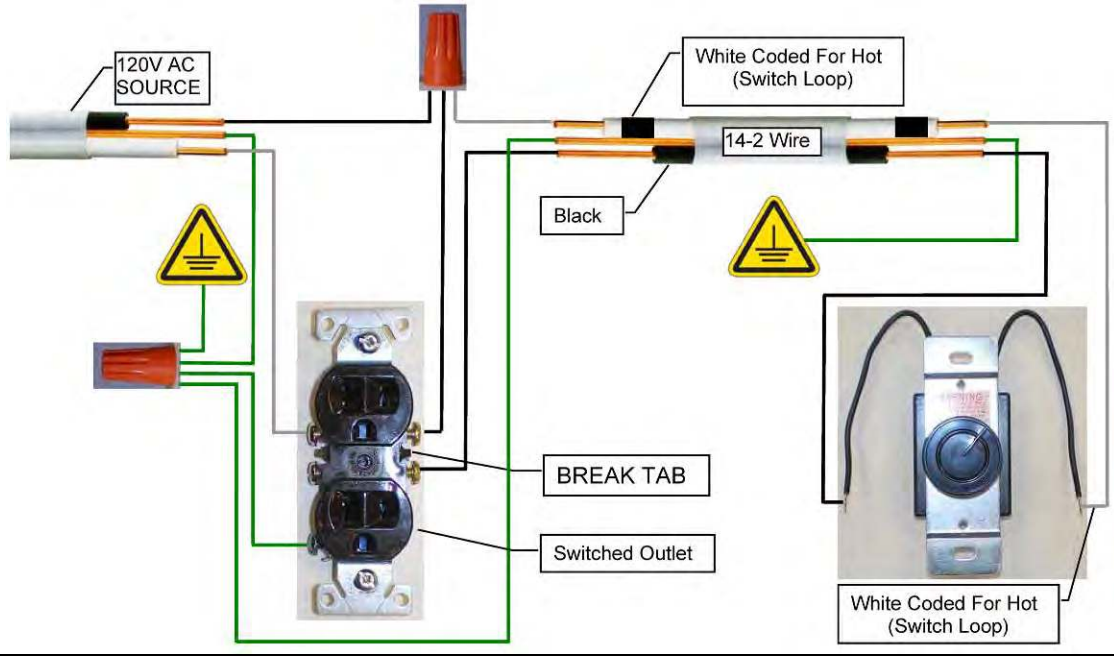

ZCV39PL / ZCV42PL Liner Installation

⚠ WARNING: Failure to position the parts in accordance with these diagrams or failure to use only parts specifically approved with this appliance may result in property damage or personal injury.

ZCV39PL / ZCV42PL Consists of:
[1] – Back Liner
[1] – Left Side Liner
[1] – Right Side Liner
[2] – Liner Retainer Clips

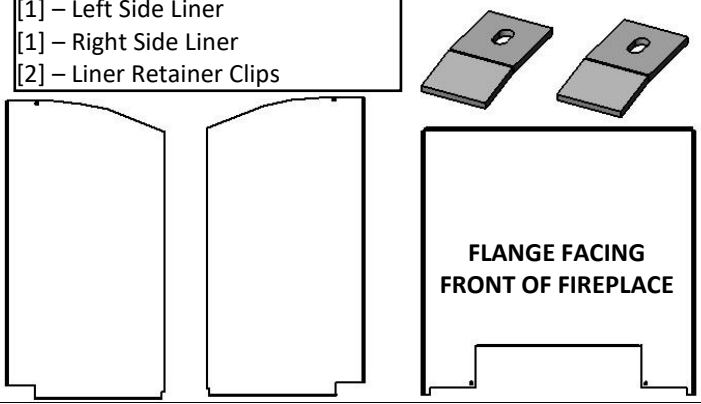



Step One: Remove Log Holder.

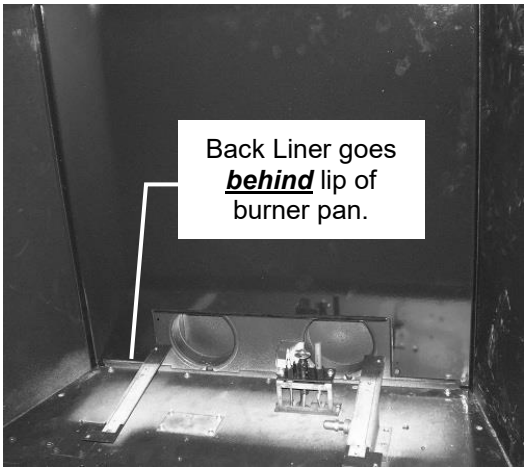

Step Two: Place Back Liner against back wall of firebox.

NOTE: For Ceramic Glass units (ZCV39NH, ZCV39NEH, ZCV39LPH, ZCV39LPEH, ZCV42NH, ZCV42NEH, ZCV42LPH, and ZCV42LPEH) burner must be removed. See ***Burner Removal*** section of manual.

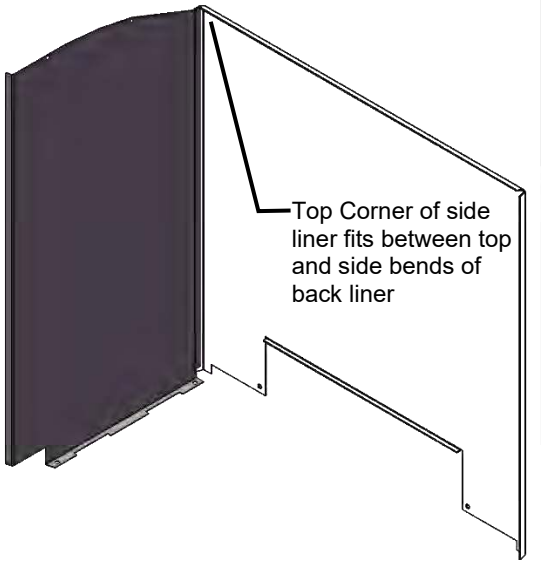

Step Three: Tilt and slide left and right Side Liners into place.



Step Four: Fix Side Liners in place using Liner Retainer Clips.

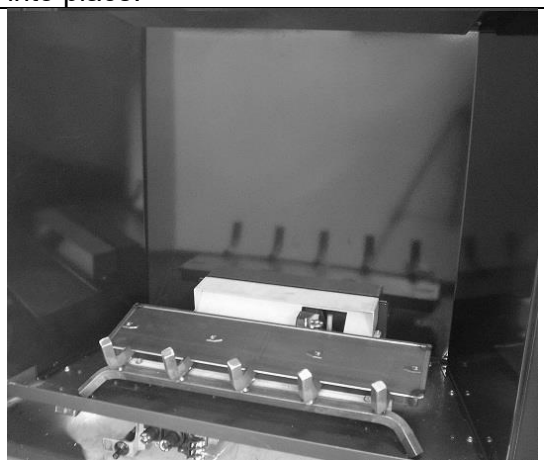

Step Five: Reinstall all components.

⚠ Note: Warping and Discoloration of Porcelain or Painted Metal Liners Is Not Covered Under Warranty.
Both Porcelain and Painted Metal Liners may discolor and warp during normal operation of your appliance. This is normal, and not considered a defect.

ZCV39 RLT / RLH / RRH / RLS & ZCV 42RLT / RLH / RRH / RLS Brick Liner Installation

NOTE: To use with GT Glass Tray, refer to ***Cutting Refractory Liners*** page in manual.

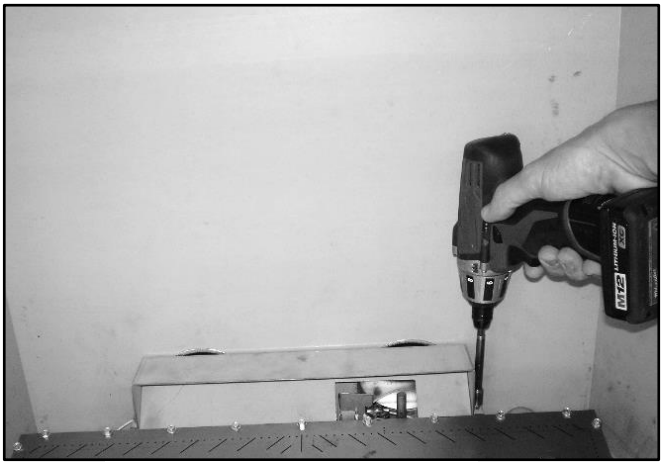

Step One: Remove Log Holder.

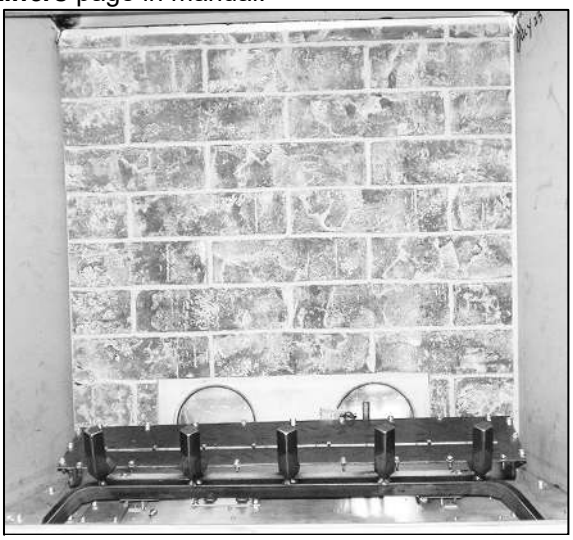

Step Two: Place Back Liner against back wall of firebox.

NOTE: For Ceramic Glass units (ZCV39NH, ZCV39NEH, ZCV39LPH, ZCV39LPEH, ZCV42NH, ZCV42NEH, ZCV42LPH, and ZCV42LPEH) burner must be removed. See Burner Removal section of manual.



Step Three: Tilt and slide left and right Side Liners into place.



Step Four: Fix Side Liners in place using Liner Retainer Clips.

Step Five: Reinstall Log Holder.

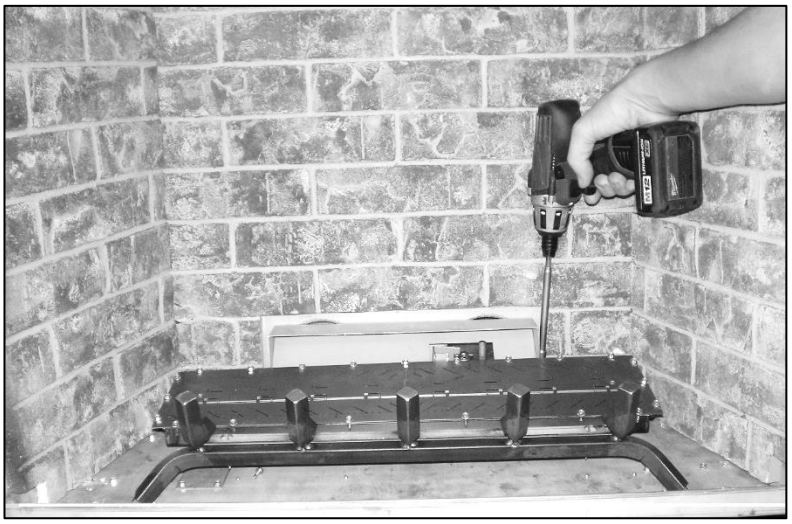

⚠ WARNING:
Failure to position the parts in accordance with these diagrams or failure to use only parts specifically approved with this appliance may result in property damage or personal injury.

ZCV39 / ZCV42 -Cutting Refractory Liners to work with GT Glass Trays-

Refractory Liners must be cut if they are to be used with a Glass Tray.

Caution: Liners are extremely fragile. Handle with care.

1. Using a utility knife, measure and cut Back Liner, removing the two side portions at the bottom.

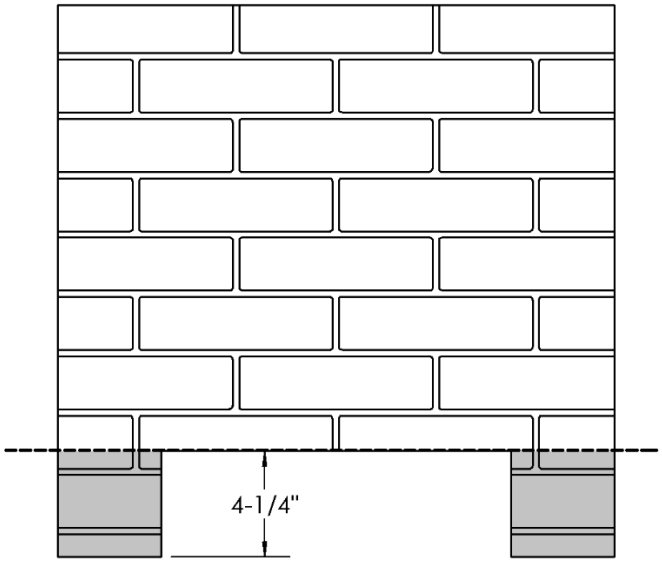

2. Make a cardboard template using the following dimensions:

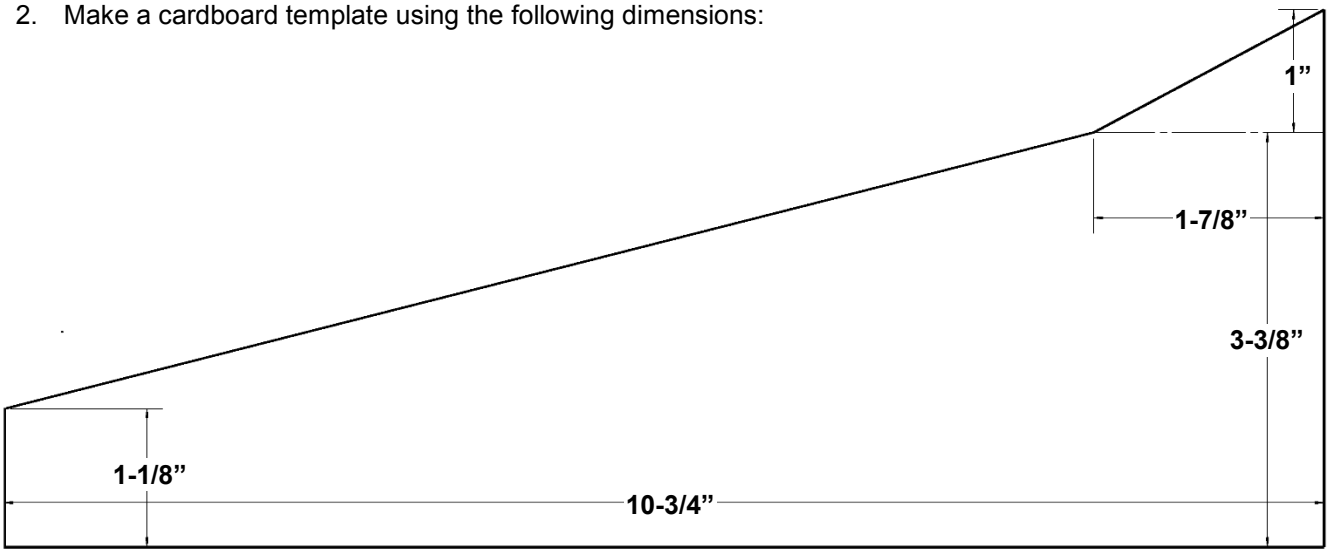

3. Use this template to mark and cut the bottom of the side liners.

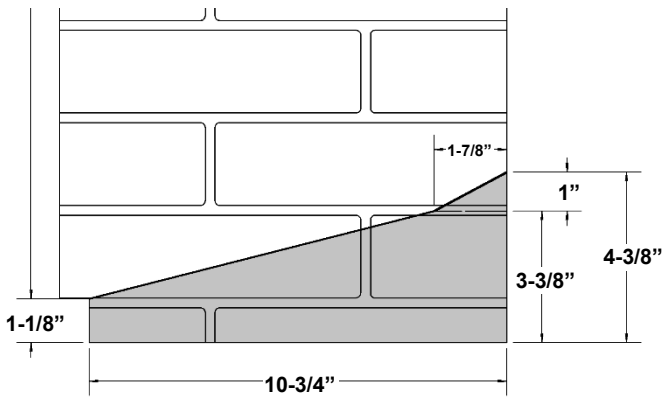

LEFT SIDE LINER

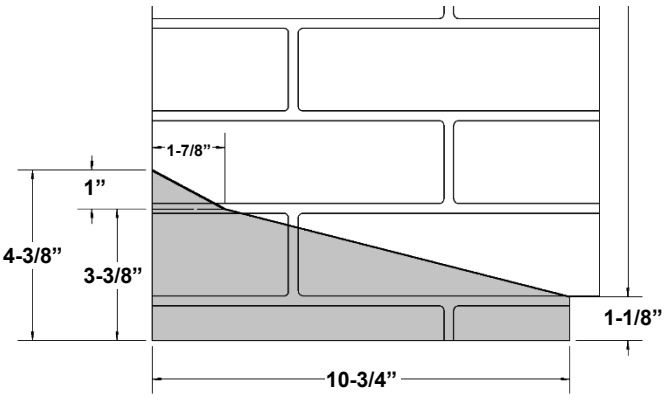

RIGHT SIDE LINER

ZCV39GT / ZCV42GT Glass Tray Setup

Parts List: [1] Glass Tray,[1] Pilot Shield, [1] Glass Retainer, [3] DT Screws.

NOTE: To use with Refractory Liners, refer to ***Cutting Refractory Liners*** page in manual.

DO NOT COVER PILOT SHIELD AREA WITH MEDIA. Visually Inspect Pilot Shield Monthly for signs of deterioration due to flame exposure. Replace if necessary.

> ⚠ **WARNING:** Failure to position the parts in accordance with these diagrams or failure to use only parts specifically approved with this appliance may result in property damage or personal injury.

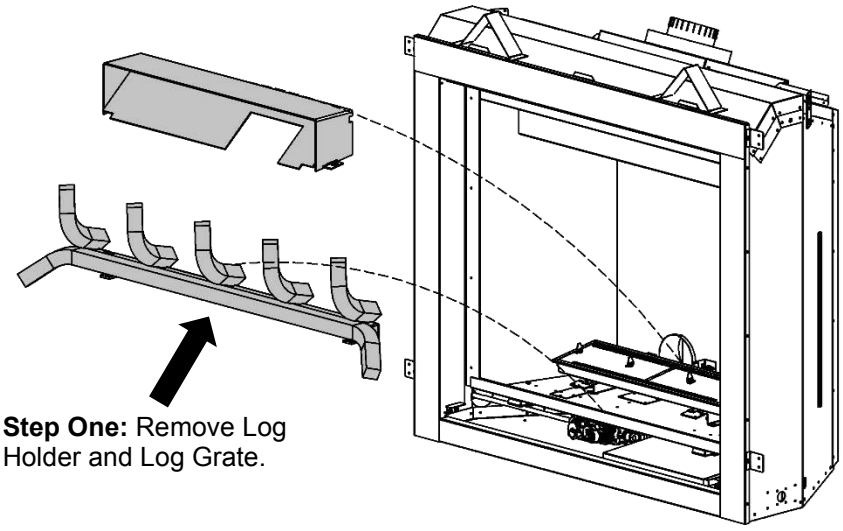

Step One: Remove Log Holder and Log Grate.

Step Two: Attach Front Fence to GT Glass Tray as shown.

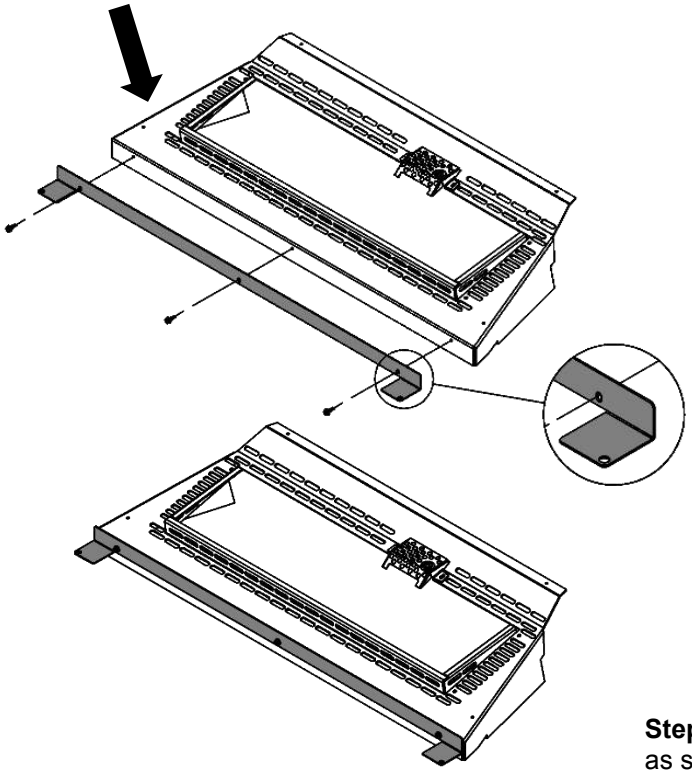

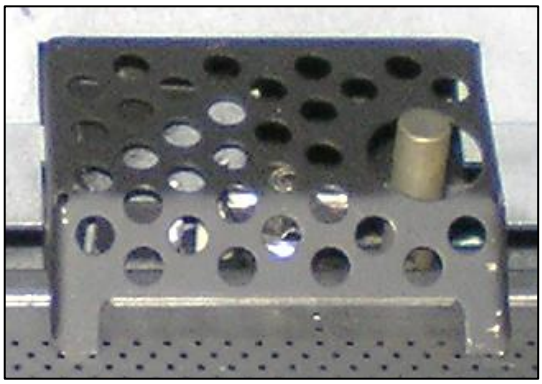

Note: For millivolt units, use a side cutter to remove webbing from thermopile opening.

Step Three: Place Glass Tray over Burner as shown.



Tabs will rest against front ledge of firebox.

ULK2 Universal Light Kit (Optional Accent Lighting Kit)

Please follow the current ANSI/NFPA 70 National Electrical Code in the USA and CAN/CSA C22.1 Canadian National Electrical Code in Canada.

Contents of Kit:
- [2] 12V Halogen Lamps
- Lamp Plate with Insulated Studs & wiring
- 12VAC Transformer with 3 prong plug & wire connectors
- Light Switch & Cover Plate c/w10ft wire c/w [1] Loose Female & [1] Loose Male wire connector

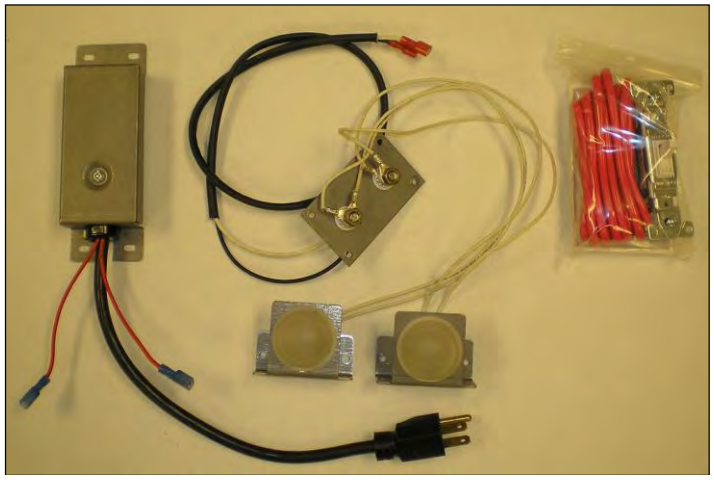

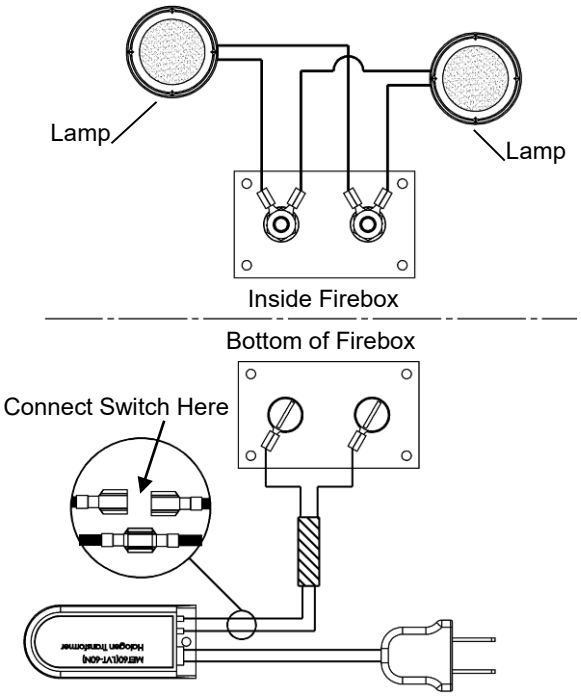

NOTE: Must be used with ZCV39GT/ ZCV42GT Glass Tray

INSTALLATION:

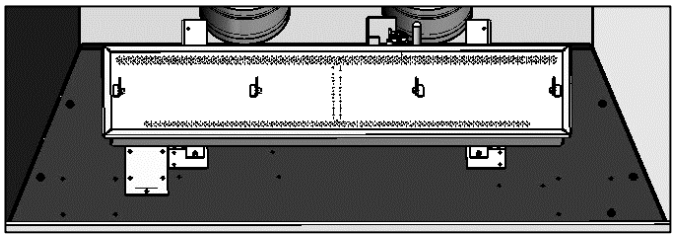

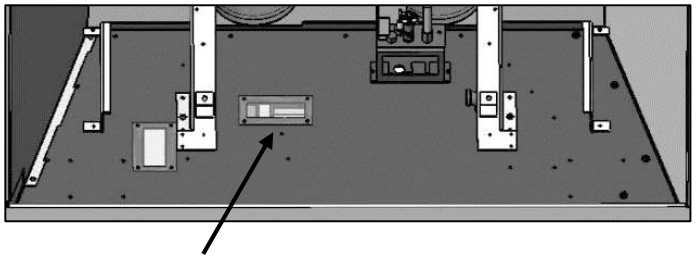

STEP 1: Remove Burner (See Burner Removal Section). **Remove Cover Plate.** Remove old sealant.

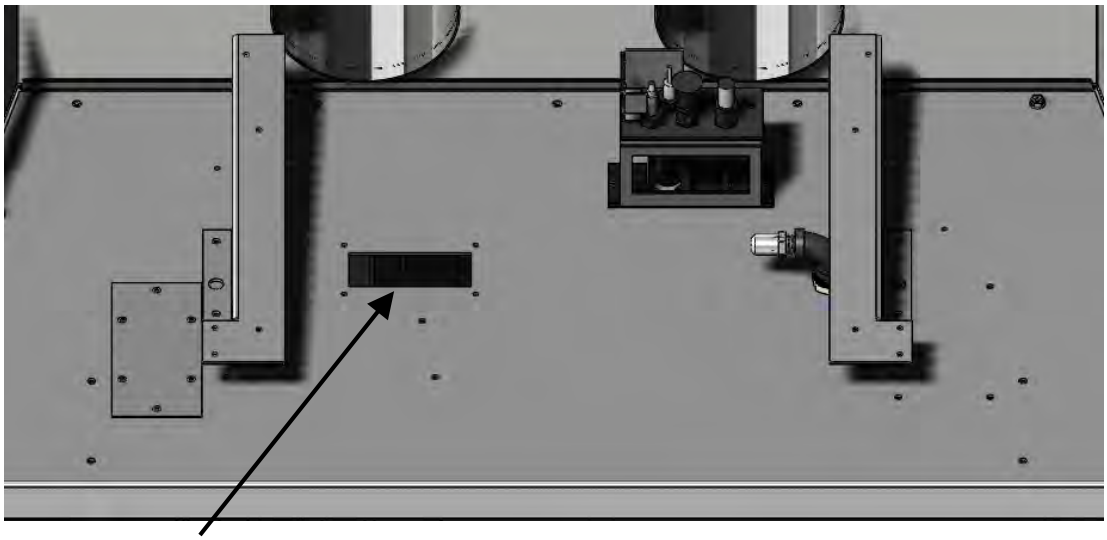

STEP 2: **Insert Lamp Wires** through access hole in firebox. **Apply New Sealant (Mill-Pac).** Secure Lamp Plate with screws.

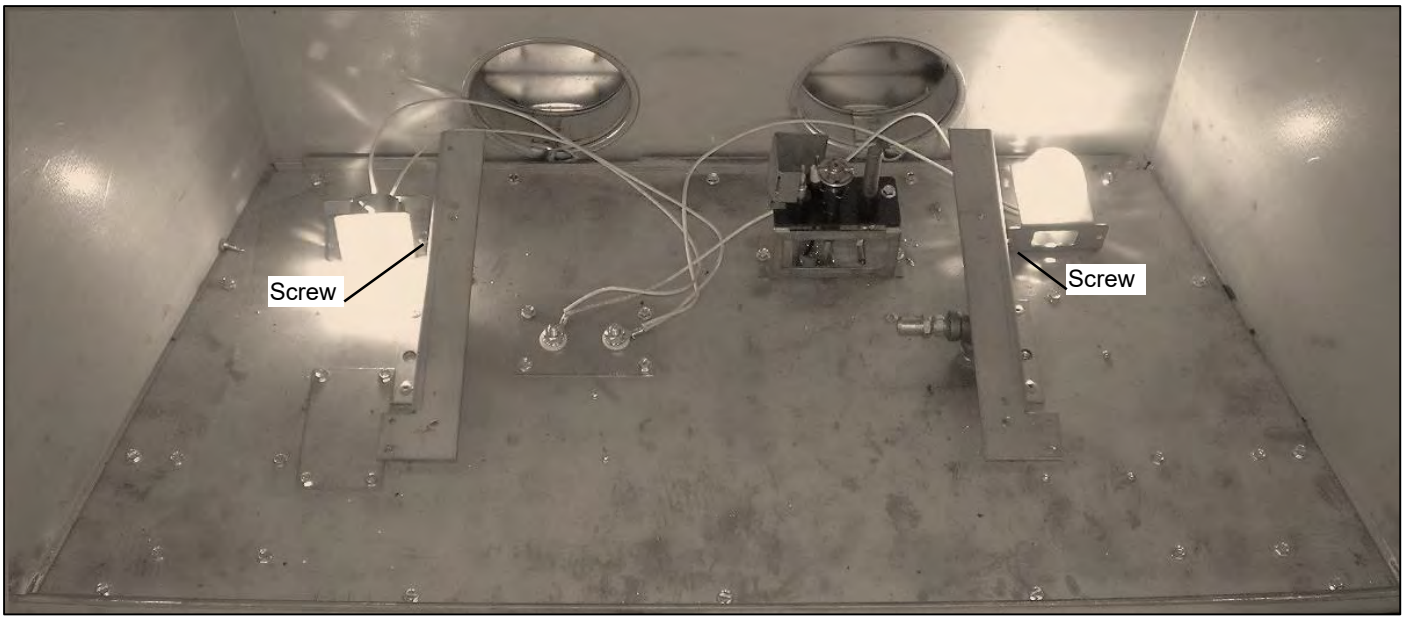

ZCV39 / ZCV42

STEP 3: Place Lamps in position in firebox. Attach to fireplace with a single screw at the locations shown above for each unit. Lamps can be placed facing upward or sideways. Replace burner and false bottom if used, along with pilot shield.

STEP 4: Connect switch wires between lamp wire and transformer (see schematic). Connect remaining lamp wire to transformer. Transformer can then be plugged in and the housing fastened to the bottom of the fireplace.



Glass may be used to cover perforations in false bottom

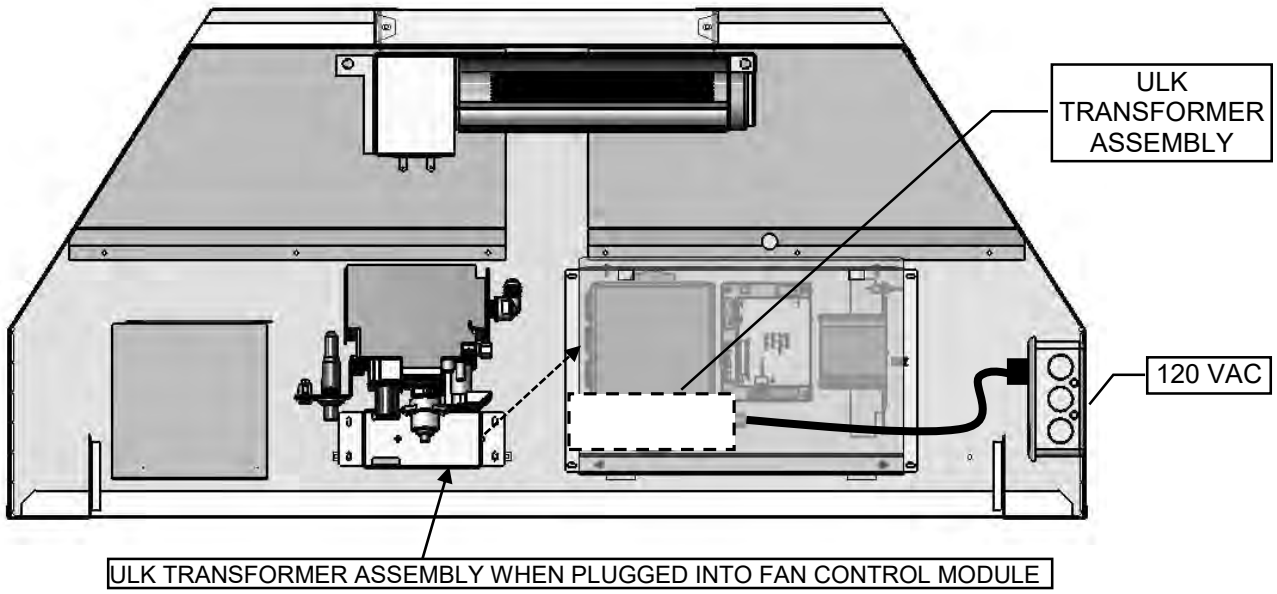

ZCV39 / ZCV42 LogF3- 7 Piece Setup

NOTE: Set Primary Air Opening at 1/8" for Natural Gas. Refer to Gas Conversion and Burner Removal sections in manual.

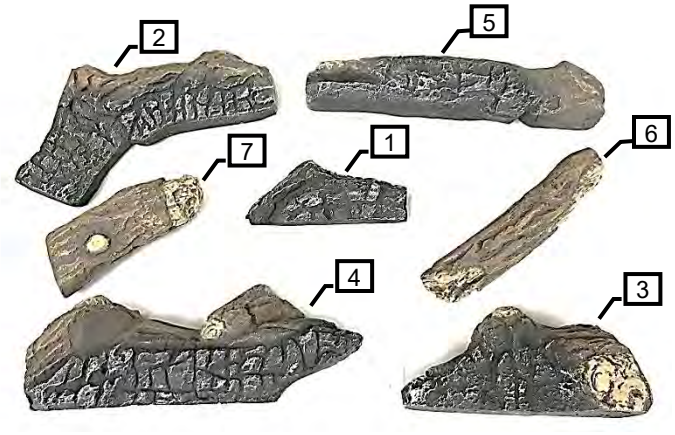

These items are supplied with the fireplace:



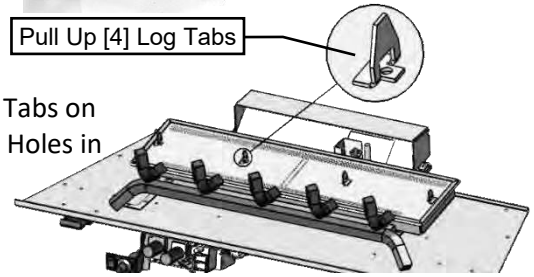

Pull up [4] Log Tabs on Burner. Match Holes in Logs 3 & 4.

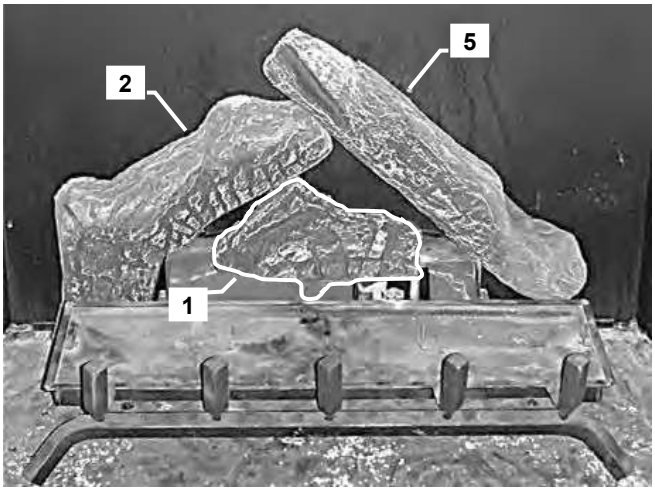

Log 1 is placed on the Log Holder against back wall of firebox. Place **Log 2** and **Log 5** as shown.

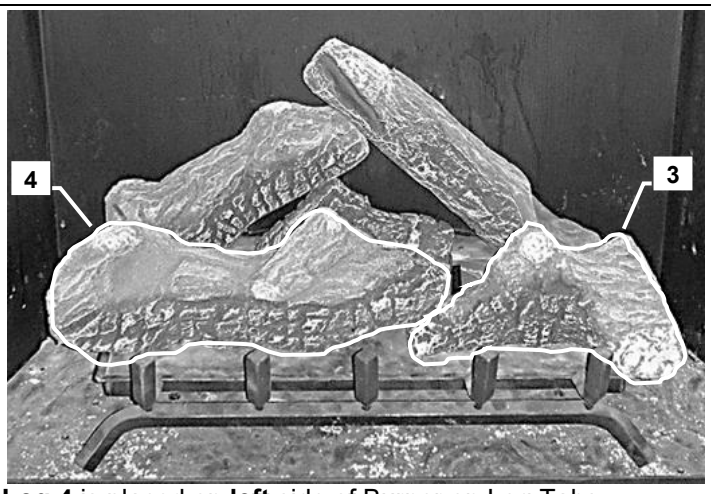

Log 4 is placed on **left** side of Burner on Log Tabs.
Log 3 is placed on **right** side of Burner on Log Tabs.

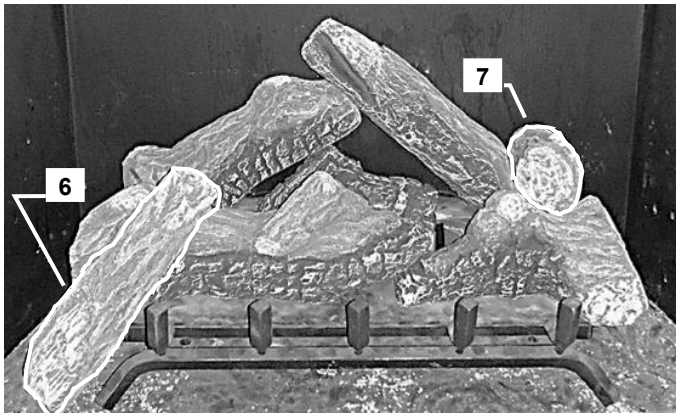

Log 6 is placed on **left** side against Log 4 as shown.
Log 7 is placed across Log 5 and Log 3 as shown.

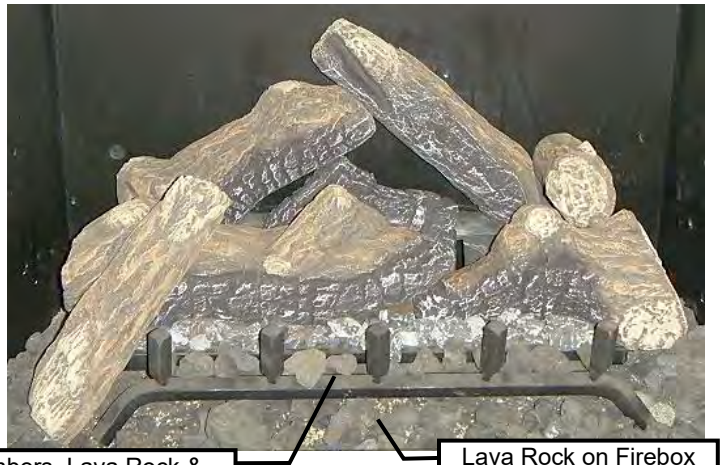

⚠ **WARNING:** Failure to position the parts in accordance with these diagrams or failure to use only parts specifically approved with this appliance may result in property damage or personal injury.

ZCV39 / ZCV42 Log C3 / F3 - 5 Piece Setup

NOTE: Set Primary Air Opening at 1/8" for Natural Gas. Refer to Gas Conversion and Burner Removal sections in manual.

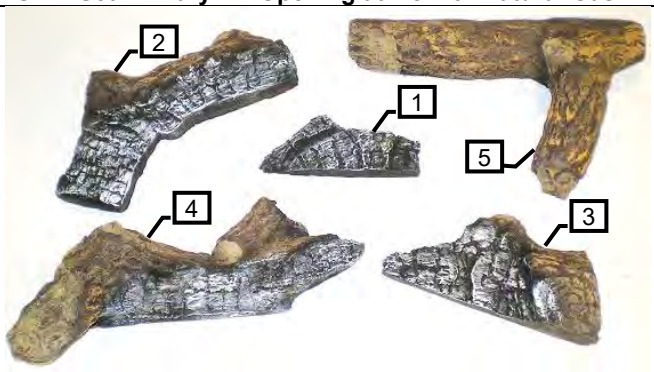

*These items are supplied with the fireplace:

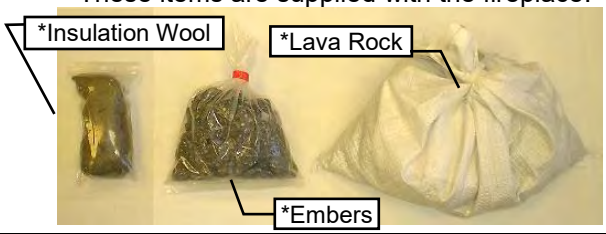

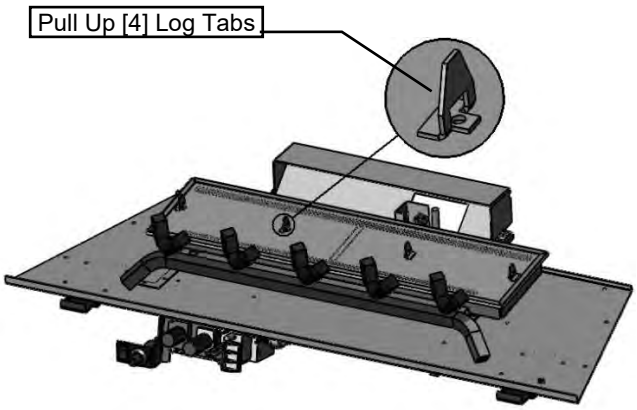

Pull up [4] Log Tabs on Burner.
Match with Holes in Logs 3 & 4.



Log 1 is placed against back wall of firebox.



Log 2 is placed against **left** back wall of firebox.
Log 3 is placed on **right** side Log Tabs.

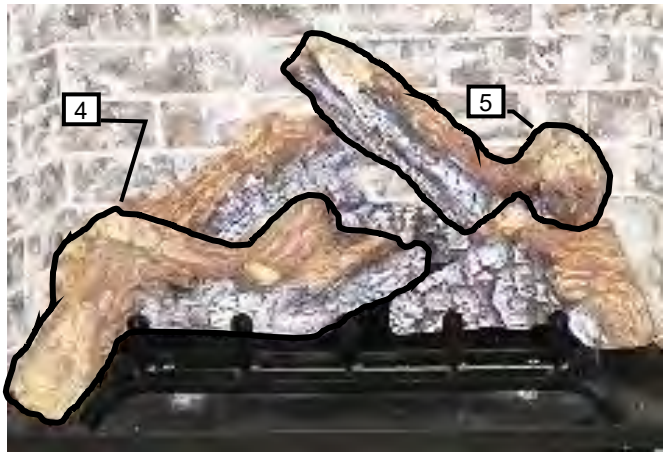

Log 4 is placed on **left** side Log Tabs.
Log 5 is placed against **right** back wall of firebox.



Embers, Lava Rock & Insulation Wool on Burner

Lava Rock on Firebox Bottom

⚠ **WARNING:** Failure to position the parts in accordance with these diagrams or failure to use only parts specifically approved with this appliance may result in property damage or personal injury.

NOTE: THESE COMPONENTS ARE SUPPLIED WITH THE FIREPLACE.



⚠ **WARNING:** Failure to position the parts in accordance with these diagrams or failure to use only parts specifically approved with this appliance may result in property damage or personal injury

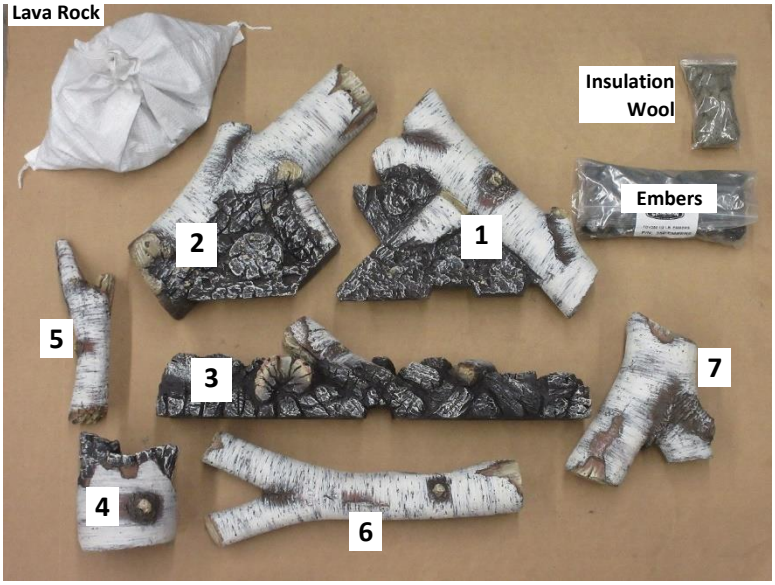

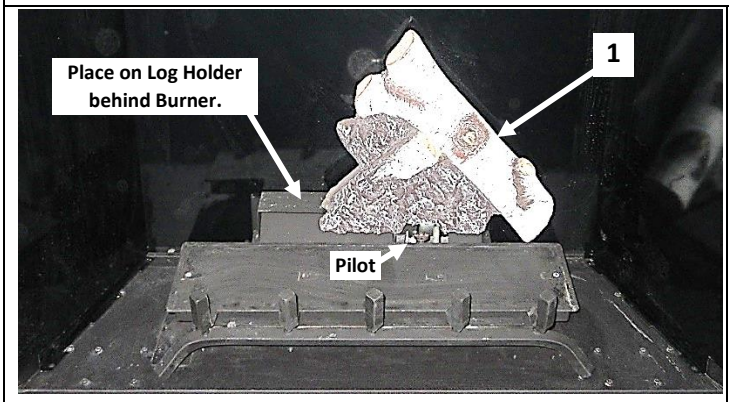

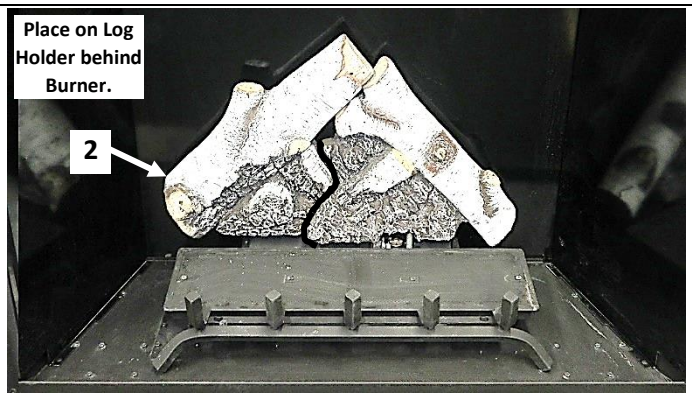



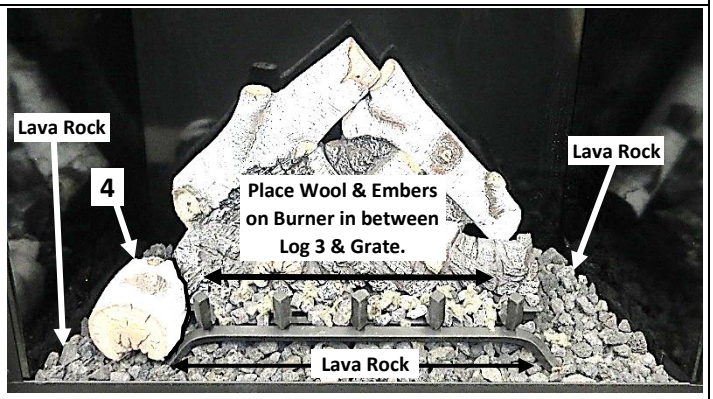

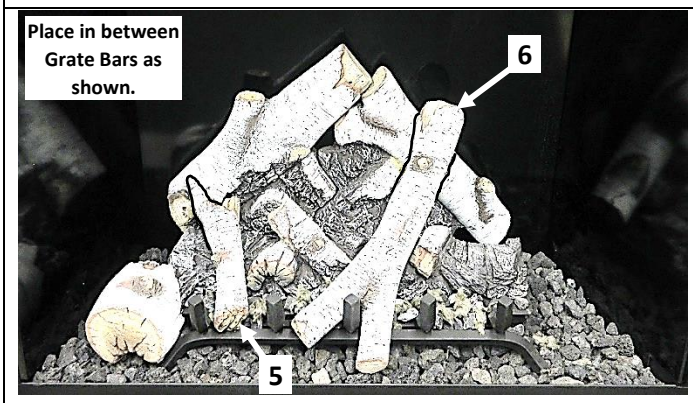



NOTE: ZCV39GT OR ZCV42GT REQUIRED.



***NOTE: THESE ITEMS ARE SUPPLIED WITH THE FIREPLACE:**

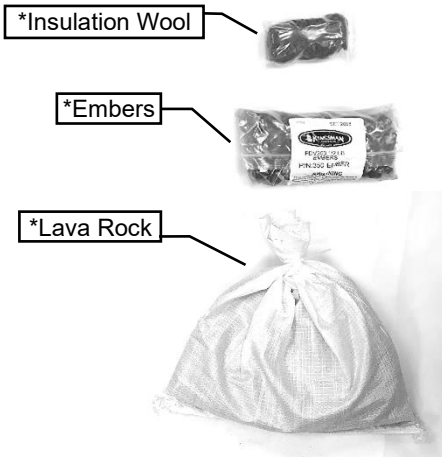

STEP 1:

Place LOG 1, LOG 2, and LOG 3 as shown.

NOTE: If Crushed Glass and ULK2 Light Kit are used, place Glass onto front area of Burner and over left and right rear lights.

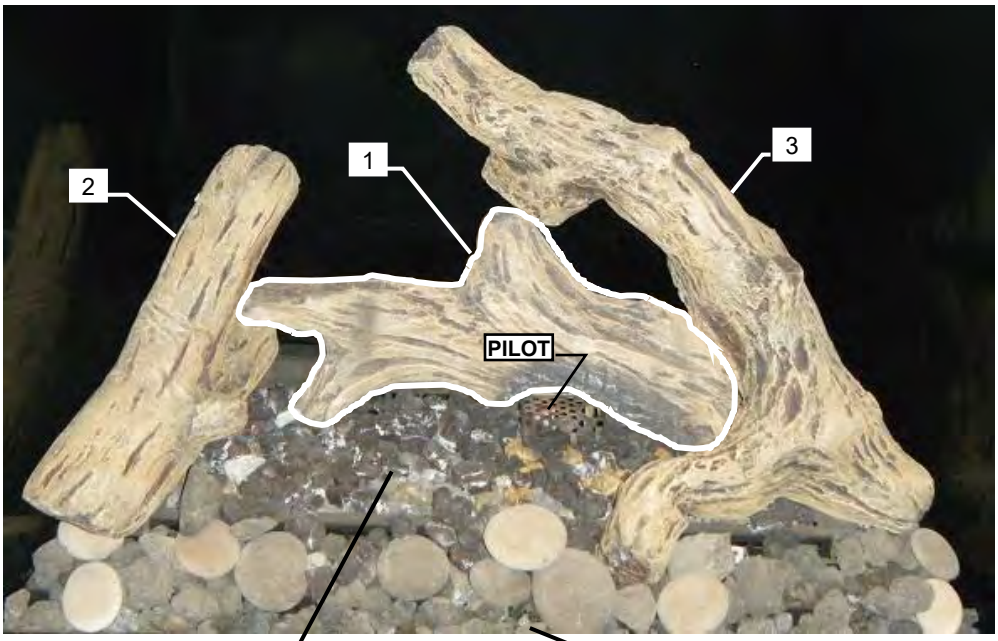

Place **Log 4** on the center-left site of the burner as shown.

Place **Log 5** as shown.

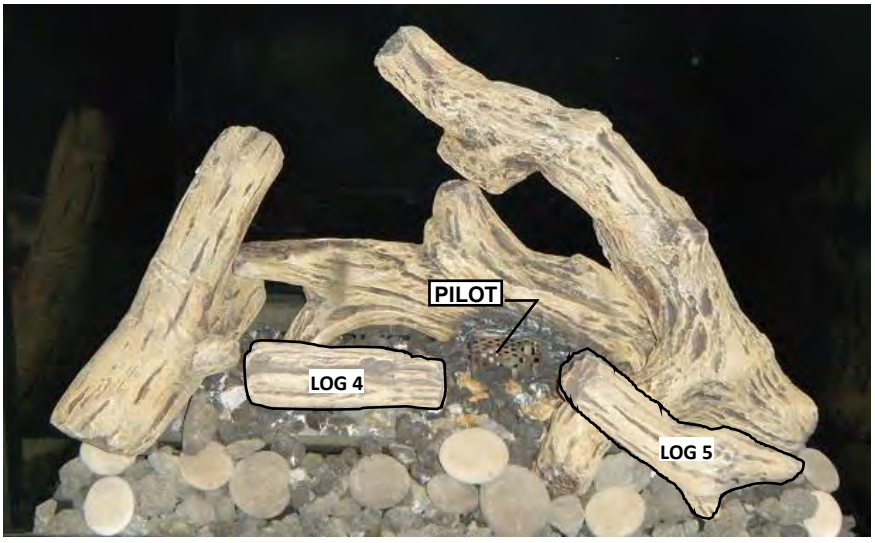



Place Log 6 as shown above.



Setup is complete.

⚠ **WARNING:** Failure to position the parts in accordance with these diagrams or failure to use only parts specifically approved with this appliance may result in property damage or personal injury

RBCB1 -Cannonballs- Installation Instructions

***Must be used with ZCV39GT/ ZCV42GT Glass Tray**

Assorted size and colors. Place randomly as desired inside fireplace.



Can be used with MQ Glass, MQ Ember, and / or Lava Rock. Do not place Cannonballs directly on burner ports. If sooting occurs change position of or remove affected objects.

- **MQ Glass can be placed directly on Burner and on Glass Tray.**
- **MQ Ember can be placed directly on Burner Only.**
- **Lava Rock (Supplied with Base Unit) CANNOT be placed on Burner.** Place Lava Rock in channel in front of Glass Tray & on Glass Tray.

NOTE

- **Pilot Area Must Not Be Covered, as delayed ignition can occur.**
- Do not place Cannonballs directly on burner ports.

Pilot Area Must Not Be Covered

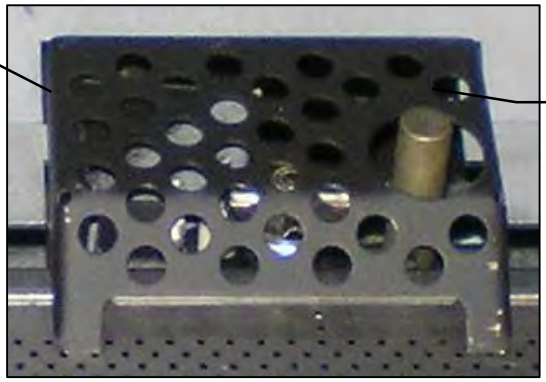

*Pilot Shield should be visually inspected monthly for signs of deterioration due to flame exposure. Replace if necessary.

MQ Dealer Accessories for ZCV39 / ZCV42

The following Accessories are available through MQ Dealers only.

ACCESSORY ITEM	DESCRIPTION
MQG5W*	Decorative Glass 1/2" White
MQG5A*	Decorative Ember Glass Cobalt Blue
MQG5B*	Decorative Ember Glass - Black
MQG5ZG*	Decorative Glass- Zircon Glacier Ice
NOTE: All glass is sold in 5 pound bags.	
MQ39D*	Driftwood Log Set- 4pcs.
MQROCK2*	Rock Set Natural
MQROCK3*	Rock Set Multi-Color
MQSTONE*	Decorative Stones
MQEMBER*	Glowing Embers
MQLOG F9	Log Set- 9pcs
*Must be used with ZCV39GT/ ZCV42GT Glass Tray	

- **GLASS (MQG5W, MQG5C, MQG5A, MQG5B, MQG5ZG)**

If you wish to use this media evenly spread the glass embers onto the false bottom and burner. Ensure the glass embers do not excessively overlap as this will affect the flame pattern. Use care when placing glass embers near the pilot area so as not block or have the glass fall over the crossover holes from the pilot to the burner, as delayed ignition can occur.

The following types of glass are approved:

- **½" Ember Glass Material from American Fireglass.**

Maximum amount: **ZCV39:** Natural Gas is 15 lbs., Propane units 15 lbs.
ZCV42: Natural Gas is 20 lbs., Propane units 20 lbs.

- **Liquid Glass from Firegear.**

Maximum amount: **ZCV39:** Natural gas is 15 lbs.
ZCV42: Natural gas is 20 lbs.
Not recommended for Propane appliances.

Use of any other glass can alter the performance of the unit and is not covered under warranty.

Discoloration of glass media may occur if placed on the burner, this is not covered under warranty.



Z5GC KINGSMAN DECORATIVE BRONZE GLASS

Pilot Area Must Not Be Covered

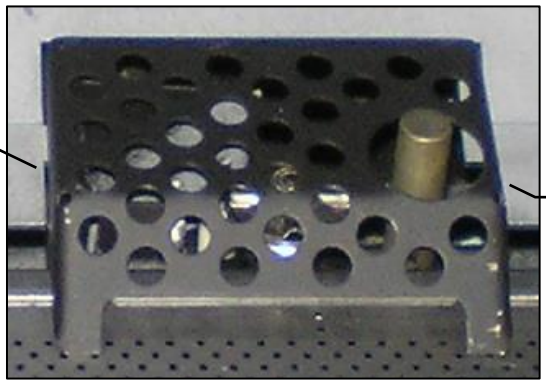

*Pilot Shield should be visually inspected monthly for signs of deterioration due to flame exposure. Replace if necessary.

- **MQG5ZG Decorative Glass- Zircon Glacier Ice** (15Lbs. for ZCV39 / 20Lbs. for ZCV42)
- Must be used with ZCV39GT/ ZCV42GT Glass Tray



Glass Retainer (supplied with Glass Tray) may be attached to Glass Tray if desired.

NOTE

- **Pilot Area Must Not Be Covered, as delayed ignition can occur.**

MQ39D Driftwood Log Set- 4pcs - Must be used with ZCV39GT/ ZCV42GT Glass Tray

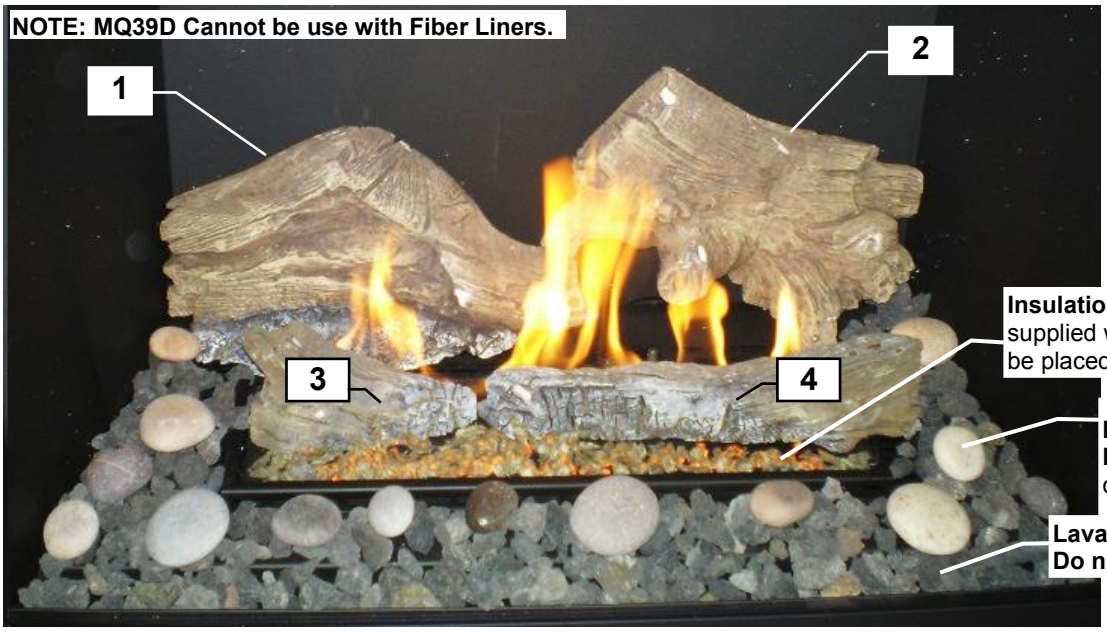

NOTE

- **Pilot Area Must Not Be Covered, as delayed ignition can occur.**

- Place **Log 1** on left side of fireplace against the back wall of the firebox.
- Place **Log 2** on the right side of fireplace against the back wall of the firebox as shown.
- Pull up Log Tabs on Burner. Match these with holes in bottom of logs 3 & 4.
- Place **Logs 3 & 4** on the burner in the center of fireplace as shown. Do not place directly on burner ports.
- If sooting occurs change position of logs or remove affected objects.

MQROCK2, MQROCK3 - Must be used with ZCV39GT/ ZCV42GT Glass Tray

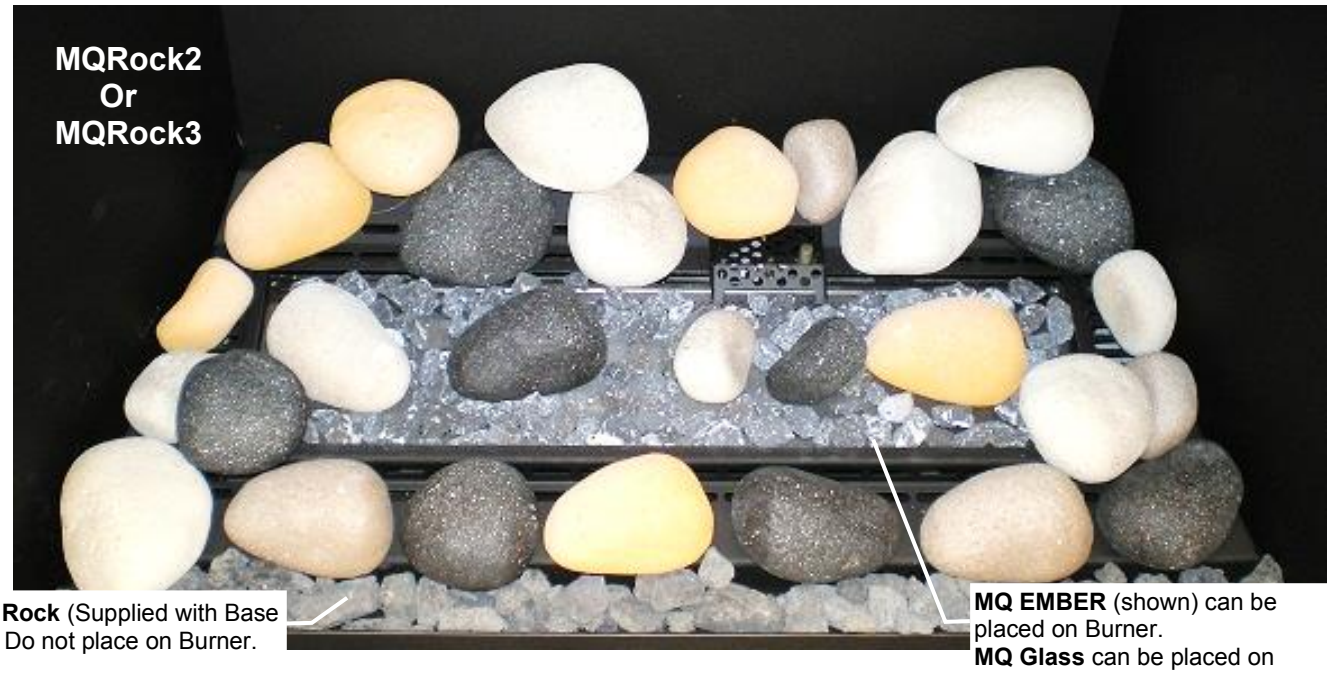

- Place rocks randomly onto False Bottom and Burner. Do not place directly on burner ports.
- Not all rocks will be used on some installations.
- If sooting occurs change position of or remove affected objects.

NOTE

- **Pilot Area Must Not Be Covered, as delayed ignition can occur.**

MQ STONE DECORATIVE STONE SET- Must be used with ZCV39GT/ ZCV42GT Glass Tray



Lava Rock (Supplied with Base Unit). Do not place on Burner.



MQ Stone can be placed on or around Burner.

MQ EMBER (shown) can be placed on Burner.
MQ Glass can be placed on Burner and Glass Tray.

- Place Stones onto False Bottom and Burner. Do not place directly on burner ports or Pilot Area.
- Not all stones will be used on some installations.
- If sooting occurs change position of or remove affected objects.

- **MQEMBER-**
- To be placed directly on Burner and Burner Ports.
- Place these glowing ember chunks randomly. May be used with or without other accessories.

Pilot Area Must Not Be Covered

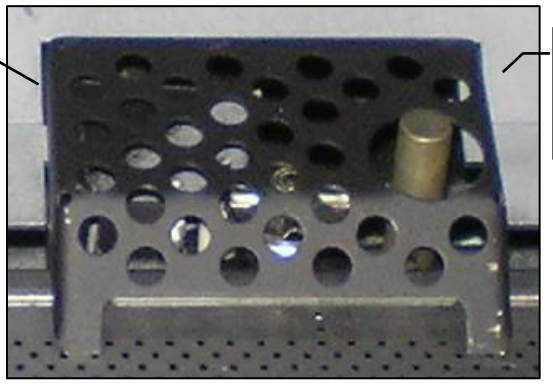

*Pilot Shield should be visually inspected monthly for signs of deterioration due to flame exposure. Replace if necessary.

NOTE

- **Pilot Area Must Not Be Covered, as delayed ignition can occur.**

MQ Log F9 Setup

NOTE: Set Primary Air Opening at 3/16" for Natural Gas. Refer to Gas Conversion and Burner Removal sections in manual.

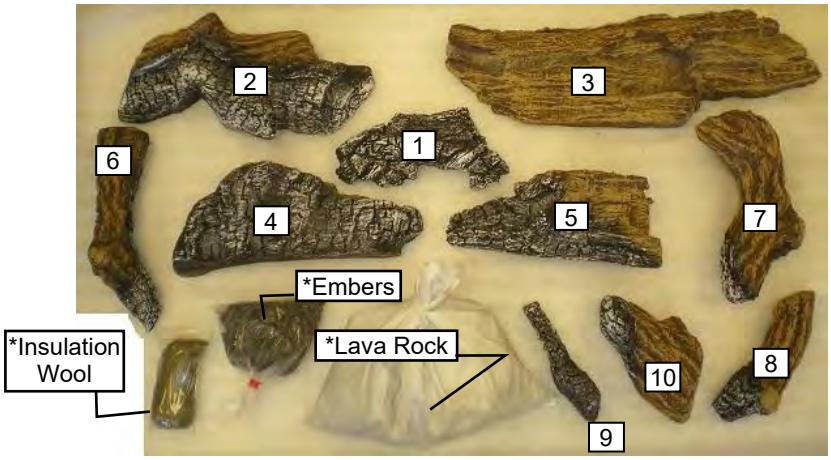

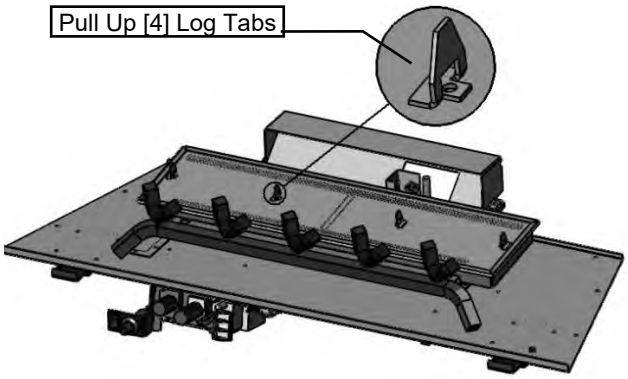

Pull up [4] Log Tabs on Burner.
Match with Holes in Logs 4 & 5.

***10 Piece Log Set.** Lava Rock, Insulation Wool, and Embers are supplied with fireplace.

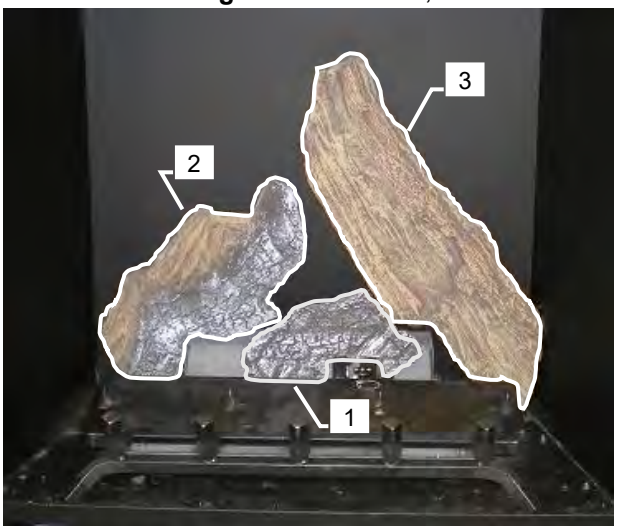

Logs 1-3 are placed against back wall of firebox.



Logs 4 & 5 are placed onto Log Tabs on Burner.

LOG 6 PLACEMENT- NATURAL GAS

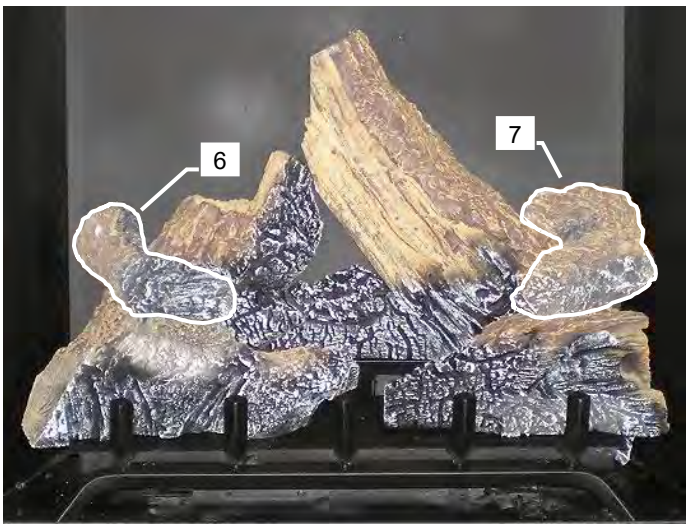

LOG 6 PLACEMENT- PROPANE

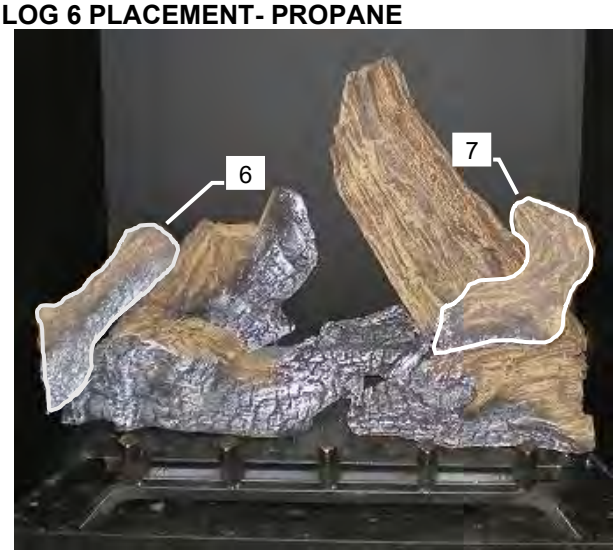

Log 6 & 7 are placed as shown, depending on which fuel is used.

⚠ **WARNING:** Failure to position the parts in accordance with these diagrams or failure to use only parts specifically approved with this appliance may result in property damage or personal injury.

(Continued)

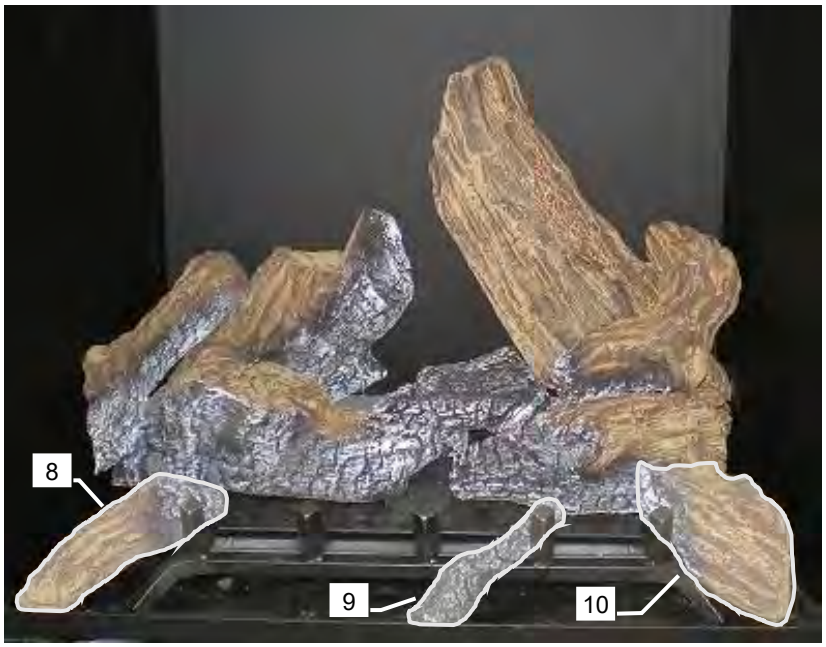

Logs 8-10 are placed along Front Grate.

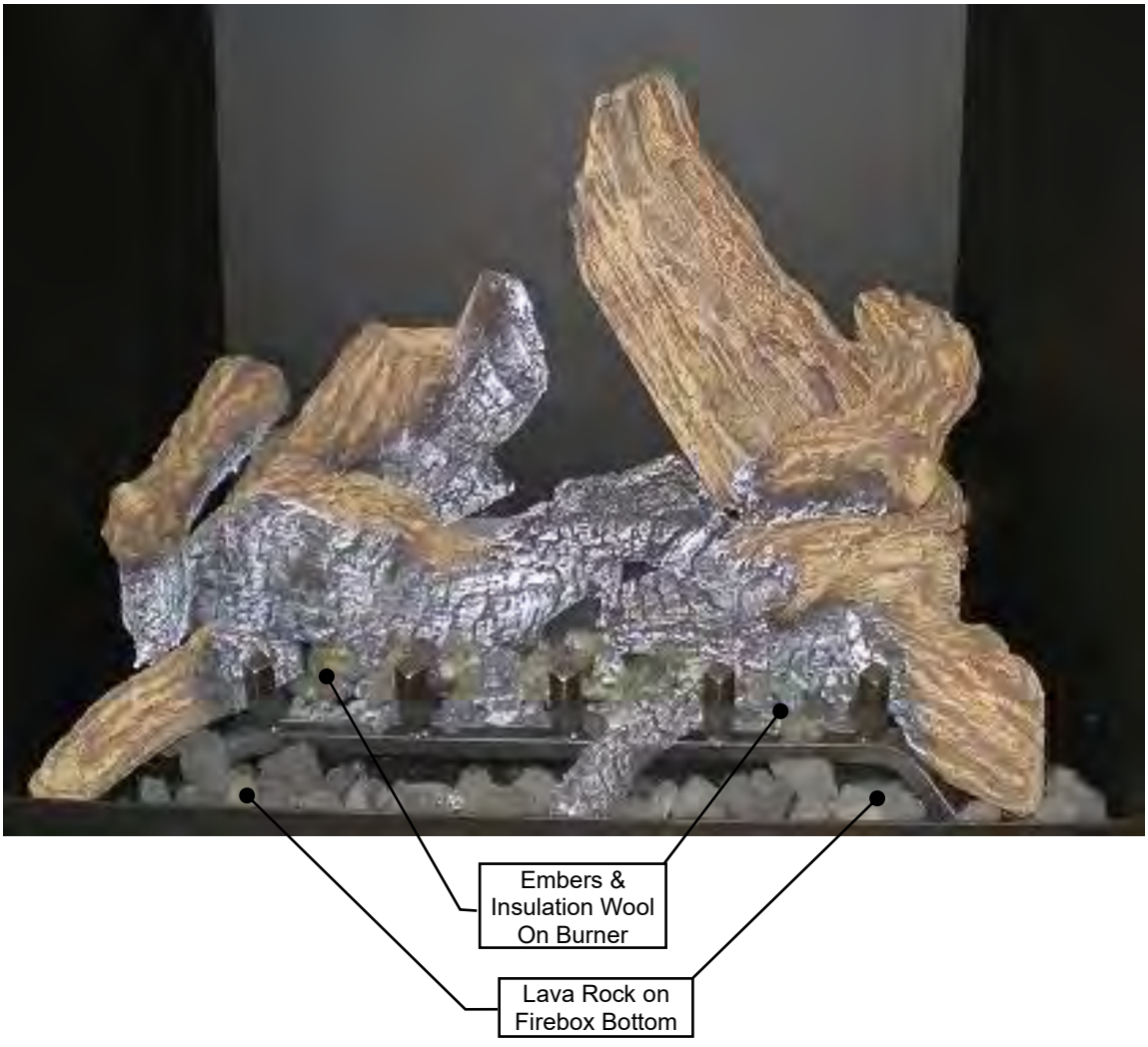

ZCV39 / ZCV42 / MCVST42 / MCVP42 Door Installation

To install Door:

1. Remove Access Cover below Glass Door.



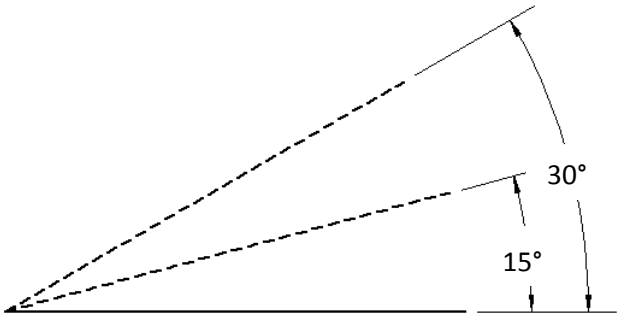

2. Engage door in lower latches at an angle of between 15 and 30 degrees.

3. Swing door up and pull top latches over door lip at each corner.

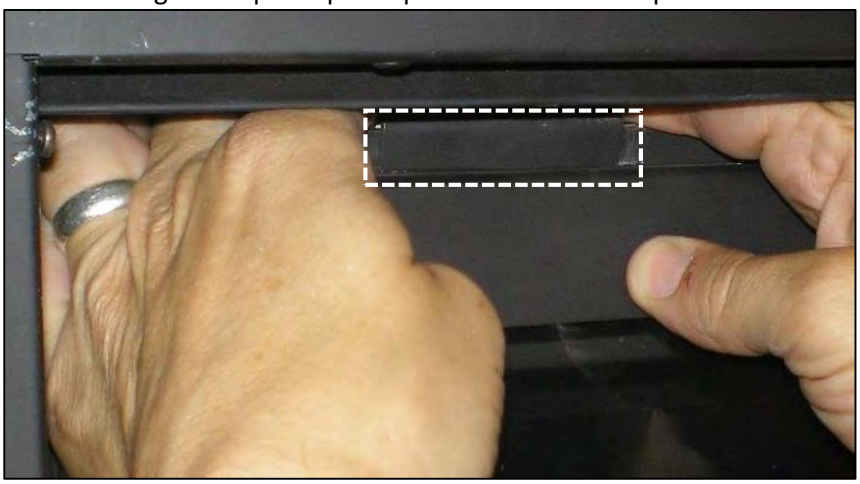





4. Replace Access Cover below Glass Door.

⚠WARNING:

Wait until unit is COMPLETELY cool before touching glass or attempting to install or remove Glass Door.

Door and Glass Information

Glass Cleaning

It will be necessary to clean the glass periodically. During startup, condensation, which is normal, forms on the inside of the glass, and causes dust, lint etc. to cling to the glass surface.
Also, initial paint curing can deposit a slight film on the glass. It is therefore recommended that initially the glass be cleaned two or three times with a fireplace glass cleaner. After that, the glass should be cleaned two or three times a season depending on the circumstances.

⚠ Cautions and Warnings

- Do not clean when the glass is hot.

The use of substitute glass will void all product warranties (see **Glass Replacement** in this section).

- Care must be taken to avoid breakage of the glass.
- Do not operate this fireplace without the glass front or with a broken glass front.
- Do not strike or abuse the glass.

Glass Replacement

ZCV39N, ZCV39NE, ZCV39LP, ZCV39LPE, ZCV42N, ZCV42NE, ZCV42LP, ZCV42LPE must use tempered glass. Must be 5mm thick. Only Robax ceramic or coated Neoceram glass may be used for replacement for Models ZCV39NH, ZCV39NHE, ZCV39LPH, ZCV39LPHE, ZCV42NH, ZCV42NHE, ZCV42LPH, and ZCV42LPHE. Glass must be minimum 5mm thick.
To replace glass, clean all materials from the door frame. Scrape off old silicone all the way down to the metal. Using high-temp silicone [rated up to 500°F (260°C)] apply a continuous bead of approximately 1/8”-3/16” to all four [4] sides of the frame. With the frame resting on a flat surface, insert the new glass with a new gasket. Gently press the glass into the silicone. Be careful not to use excessive force on the glass. Let the silicone dry for approximately 15-20minutes.
Use caution when removing broken glass. Wear gloves.

Removal of the Glass Door

1. Remove the door by unlatching the 2 top latches. Simply place 2 fingers in the grooves, and pull and lift upward slightly.
2. Once the top of the door is unlatched, pull it outward and lower it to unlatch the bottom.
3. To re-install, place the Bottom Door Ledge into the 2 Lower Latch assemblies first. Then swing the door closed to seal it against the firebox cavity. Re-latch the Upper Latch assembly to secure the door to the appliance.

Spring Replacement

*Over time, the door latch springs (P/N# 36HB-123 for 51MQ-123A and P/N# 33IDV-123 for 33IDV-123A) may need to be replaced if tension is lost.

1. To replace latch spring, remove the 2 hex screws (located in the firebox) that secure the latch assembly in place.
2. Once the screws are removed the latches will slide out of place.
3. Remove the locknut from the latch assembly and replace the spring. Re-tighten the locknut until 2 thread turns are beyond the locknut. This is critical for proper tension. Replace latch assembly.

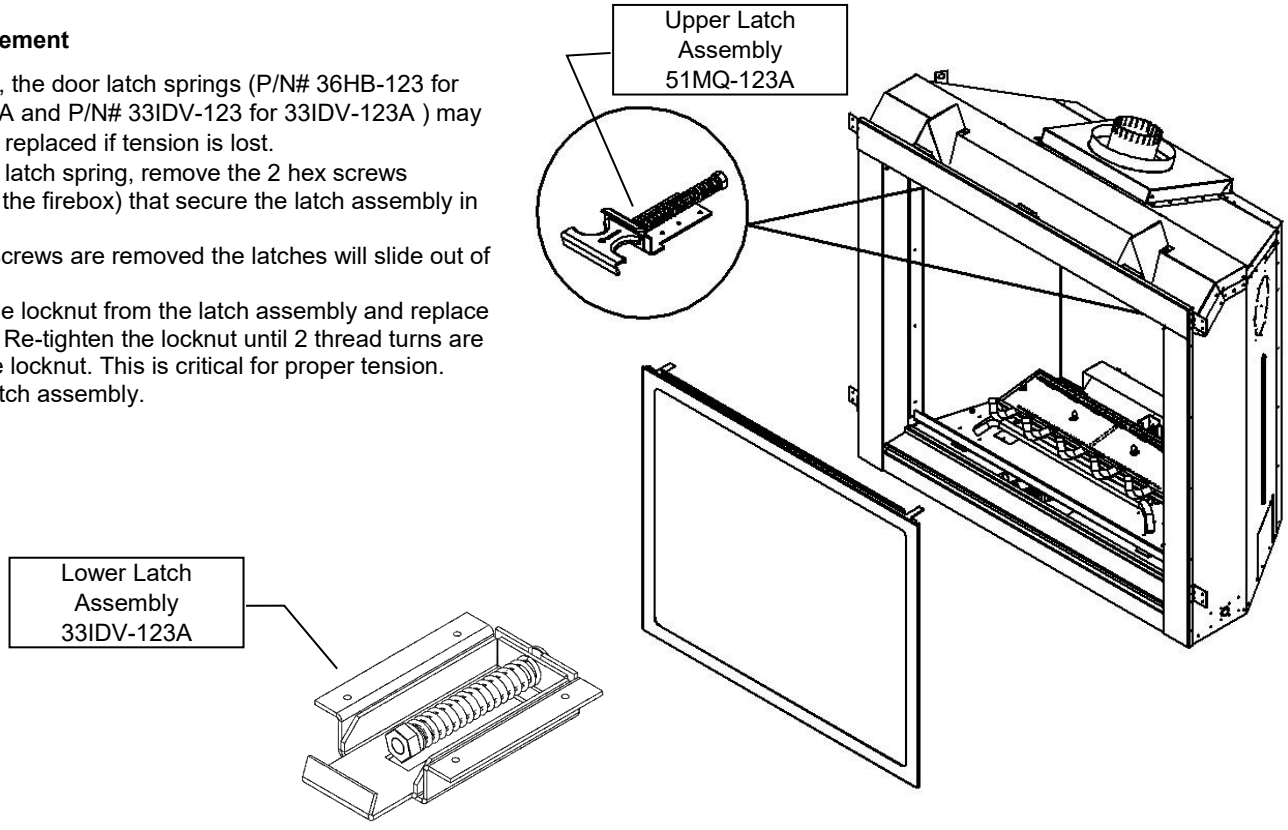

Gas Line Installation

This gas appliance should be installed by a qualified installer in accordance with local building codes and with current CAN/CGA - B149.1 or .2 installation codes for Gas Burning appliances and equipment in Canada and the National Fuel Gas Code ANSI Z223 in the U.S.A.

1. The gas pipeline can be brought in through either the right or the left side of the appliance. A knockout is provided at either location to allow for the gas pipe installation and testing of any gas connection.
2. The gas control inlet is 3/8" NPT. Typical installation layout for rigid pipe is shown at right.
3. When using copper or flex connector, use only approved fittings. Always provide a union so that gas line can be easily disconnected for burner or fan servicing. See gas specification for pressure details and ratings.
4. When a vertical section of gas pipe is required for the installation, a condensation trap is needed. See CAN/CGA-B149.1 or .2 for code details.
5. For natural gas, a minimum of 3/8" iron pipe with gas minimum pressure of 4.5" w.c. must be used for supply from the gas meter. Consult with the local gas utility if any questions arise concerning pipe sizes.
6. 1/8" NPT plugged tappings are accessible for test gauge connection on both the inlet and outlet of the gas valve.
7. Turn the gas supply ON and check for leaks. DO NOT USE OPEN FLAME FOR THIS PURPOSE. Use an approved leak testing solution.
8. The appliance and its individual shutoff valve must be disconnected from the gas supply piping system during any pressure testing of the gas supply piping system at test pressures equal to or less than 1/2 PSIG (3.5Kpa)..
9. The appliance must be isolated from the gas supply piping system by closing its individual shutoff valve during any pressure testing of the gas sup- ply piping system at test pressures equal to or less than 1/2 PSIG (3.5 KPa).

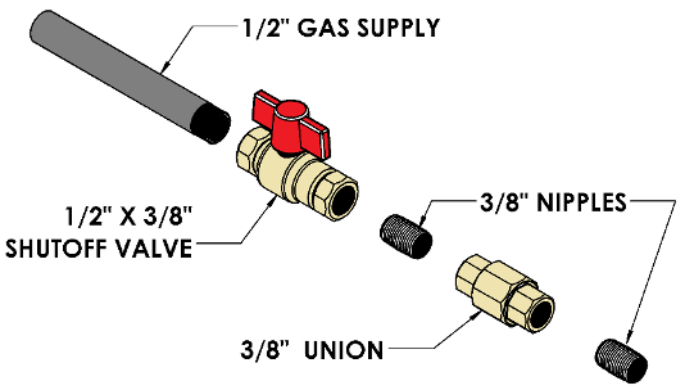

NOTE: The gas line connection may be made of 1/2" rigid pipe or an **Approved Kingsman Flex Connector, such as FP15GC**. Since some municipalities have additional local codes, it is always best to consult your local authorities and the current CAN/CGA - B149.1 or .2 installation code in Canada or the National Fuel Gas code ANSI Z223.1 in the U.S.A

For the state of Massachusetts a T-handle gas shut-off valve must be used on a gas appliance. This T-handle gas shut-off valve must be listed and approved by the state of Massachusetts. This is in reference to the state of Massachusetts state code CMR238.

Important: Always check for gas leaks with a soap and water solution. Do not use open flame for leak testing.

Gas Specifications

MODELS	ZCV39N ZCV39NE ZCV39NE2	ZCV39LP ZCV39LPE ZCV39LPE2	ZCV39NH ZCV39NHE ZCV39NHE2	ZCV39LPH ZCV39LPHE ZCV39LPHE2	ZCV42N ZCV42NE ZCV42NE2	ZCV42LP ZCV42LPE ZCV42LPE2	ZCV42NH ZCV42NHE ZCV42NHE2	ZCV42LPH ZCV42LPHE ZCV42LPHE2
Fuel	Natural	Propane	Natural	Propane	Natural	Propane	Natural	Propane
Gas Control	Millivolt / IPI	Millivolt / IPI	Millivolt / IPI	Millivolt / IPI	Millivolt / IPI	Millivolt / IPI	Millivolt / IPI	Millivolt / IPI
INPUT								
Maximum	25,000 BTU	25,000 BTU	28,000 BTU	29,000 BTU	25,000 BTU	25,000 BTU	29,500 BTU	29,000 BTU
Low	16,750 BTU	20,000 BTU	19,000 BTU	23,000 BTU	16,500 BTU	19,500 BTU	20,000 BTU	23,000 BTU
Orifice Size (0-4500ft)	#38	1/16"	#37	#51	#38	1/16"	#36	#51
Air Shutter	1/8"	Fully Open	1/8"	Fully Open	1/8"	Fully Open	1/8"	Fully Open

Gas Inlet Size S.I.T. 820 Nova, 3/8" NPT			
Gas Supply Pressure	Minimum	Normal	Maximum
Natural Gas	5.5"	7"	9"
Propane	11"	11"	12"

Manifold Pressure	Natural Gas	Propane
Manifold Pressure High	3.5 IN. W.C./.87 KPa	10 IN. W.C./2.61 KPa
Manifold Pressure Low	1.6 IN. W.C./.40 KPa	6.3 IN. W.C./1.57 KPa

Millivolt System, Lighting, and Burner Control

FOR YOUR SAFETY READ BEFORE LIGHTING

⚠WARNING: If you do not follow these instructions exactly, a fire or explosion may result causing property damage, personal injury or loss of life.

BEFORE LIGHTING

A This appliance has a pilot which must be lighted by hand. When lighting the pilot, follow these instructions exactly.

B Smell all around the appliance area for gas. Be sure to smell next to the floor because some gas is heavier than air and will settle on the floor.

WHAT TO DO IF YOU SMELL GAS

- Do not try to light an appliance.
- Do not touch any electrical switch; do not use any phone in your building.
- Immediately call your gas supplier from a neighbour's phone. Follow the gas supplier's instructions.
- If you cannot reach your gas supplier, call the fire department.

C Use only your hand to push or turn the gas control knob. Never use tools. If the knob will not push in or turn by hand, don't try to repair it. Call a qualified technician. Force or attempted repair may result in a fire or explosion.

D Do not use the appliance if any part has been under water. Immediately call a qualified service technician to inspect the appliance and to replace any part of the control system which has been under water.

LIGHTING INSTRUCTIONS

1. Stop! Read the safety information above this label.
2. Set the thermostat to lowest setting.
3. Turn off all electrical power to the appliance.
4. Locate valve under the burner assembly.
5. If the control knob is not already in the off position, i.e. the word "OFF" in the 9 o'clock position, then push in the gas control knob slightly and turn ↻ clockwise to "OFF". NOTE: Knob cannot be turned from "PILOT" to "OFF" unless knob is pushed in slightly. Do not use force.
6. Wait five [5] minutes to clear out any gas. If you then smell gas. STOP! Follow "B" in the safety information above on this label. If you don't smell gas then go to the next step.
7. Now push in the control knob slightly and turn ↺ counter-clockwise to the "PILOT" position.
8. Push in the control knob all the way and hold it. With the other hand push in the red igniter button until you hear a click. Now observe closely the pilot burner located on the rear center-left hand side of the main burner. If a flame has appeared then continue to depress the control knob for 20 seconds. If the flame did not appear then continue to depress the red igniter button every 5 seconds until a flame is established. NOTE: If after 30 seconds a flame has not yet been established then turn the control knob back to the off position and repeat steps 5, 6 & 7.
9. Once the pilot has been established hold the control knob in the depressed position for approximately 25 seconds before releasing. If the flame goes out then repeat steps 7 and 8.
   - If the knob does not pop up when released, stop and immediately call your service technician or gas supplier.
   - If the pilot will not stay lit after several tries, turn the gas control to "OFF" and call your service technician.
10. Now turn the control knob to the "ON" position. The burner will not light unless the wall switch thermostat or remote control is turned "ON" or in the case of the thermostat there is a call for heat.
11. Close the access door and turn all electrical power back to the appliance.

TO TURN OFF THE APPLIANCE

1. Set the thermostat to lowest setting.
2. Turn off all electric power to the appliance if service is to be performed.
3. Open the control access door.
4. Push in the gas control knob slightly and turn ↻ clockwise to the "OFF" position. Do not force.
5. Replace control access panel.

NOTE: Only one on/off device (manual on/off, remote control, or hard wired thermostat) should be connected to the appliance at any one time, this is most important when installing an insert or stove as the on/off rocker switch is installed at the factory.

Recommended Maximum Lead Length (Double Wire)
When Using Wall Switch or Thermostat

Wire Size	Max. Length
14ga	100ft [30.4m]
16ga	64ft [19.5m]
18ga	40ft [12.1m]
20ga	25ft [7.6m]
22ga	15ft [4.5m]

CAUTION: DO NOT WIRE 120V POWER TO MILLIVOLT SWITCHES OR THERMOSTAT.

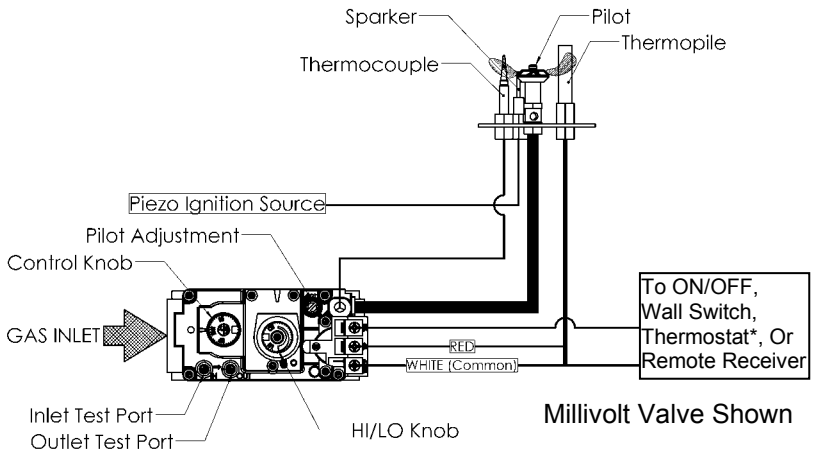

Millivolt Valve Shown

- Lighting Instructions for Millivolt Valve with 7 Day Timer -

FOR YOUR SAFETY READ BEFORE LIGHTING

WARNING: If you do not follow these instructions exactly, a fire or explosion may result causing property damage, personal injury or loss of life.

A. This appliance has a pilot which must be lighted by hand. When lighting the pilot, follow these instructions exactly.

B. **BEFORE OPERATING** smell around the appliance area for gas. Be sure to smell next to the floor because some gas is heavier than air and will settle on the floor.

WHAT TO DO IF YOU SMELL GAS

- Do not try to light any appliance.
- Do not touch any electric switch; do not use any phone in your building.
- Leave the building immediately.
- Immediately call your gas supplier from a neighbor's phone. Follow the gas supplier's instructions.
- If you cannot reach your gas supplier, call the fire department.

C. Do not use this appliance if any part has been under water. Immediately call a qualified service technician to inspect the appliance and replace any part of the control system and any gas control which has been under water.

D. Use only your hand to push in or turn the gas control knob. Never use tools. If the knob will not push in or turn by hand, do not try to repair it; call a qualified service technician. Force or attempted repair may result in a fire or explosion.

OPERATING INSTRUCTIONS

1. **Stop!** Read the safety information above on this label.
2. This appliance is equipped with an on-demand pilot that shuts off after 7 days.
3. Set the thermostat to lowest setting.
4. Turn off all electric power to the appliance.
5. Locate valve under the burner assembly.
6. If the control knob is not already in the off position, i.e. the word "OFF" in the 9 o'clock position, then push in the gas control knob slightly and turn ↻ clockwise to "OFF". NOTE: Knob cannot be turned from "PILOT" to "OFF" unless knob is pushed in slightly. Do not use force.

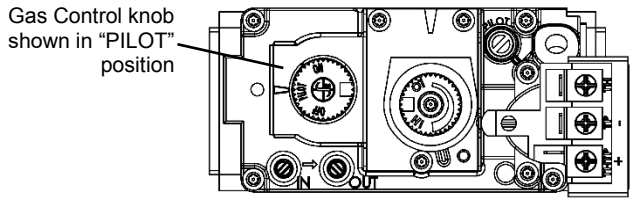

7. Wait five (5) minutes to clear out any gas. Then smell for gas, including near the floor. If you smell gas, STOP! Follow "B" in the safety information above this label. If you do not smell gas, go to next step.
8. Now push in the control knob slightly and turn ↺ counter-clockwise to the "PILOT" position.
9. Push in the control knob all the way and hold it. With the other hand push in the red igniter button until you hear a click. Now observe closely the pilot burner located on the rear center-left hand side of the main burner. If a flame has appeared then continue to depress the control knob until a BEEP is heard. This procedure may take up to TWO MINUTES.
10. If the pilot flame did not appear then continue to depress the red igniter button every 5 seconds until a flame is established. NOTE: If after 30 seconds a flame has not yet been established then turn the control knob back to the off position and repeat steps 7, 8, and 9.
11. Once the pilot has been established hold the control knob in the depressed position for approximately 25 seconds before releasing. If the flame goes out then repeat steps 9 and 10.
    - If the knob does not pop up when released, stop and immediately call your service technician or gas supplier.
    - If the pilot will not stay lit after several tries, turn the gas control to "OFF" and call your service technician.
12. Now turn the control knob to the "ON" position. The burner will not light unless the wall switch thermostat or remote control is turned "ON" or in the case of the thermostat there is a call for heat.
13. Close the access door.
14. Turn on all electric power to the appliance.
15. Set thermostat to desired setting.
16. If the appliance will not operate, follow the instructions "To Turn Off Gas To Appliance" and call your service technician or gas supplier.

TO TURN OFF GAS TO APPLIANCE

1. Set thermostat to lowest setting.
2. Turn off all electric power to the fireplace if service is to be performed.
3. Open the control access door.
4. Push in the gas control knob slightly and turn ↻ clockwise to the "OFF" position. Do not force.
5. Close the control access door.

Annual Inspection List for Determining Safe Operation of a Direct Vent Gas Fireplace

Refer to this checklist for proper maintenance, safe use, and operation.

See each section for more specific information.

1. Inspect and operate all pressure relief mechanisms (i.e., relief dampers, spring loaded door latches) installed on your appliance to verify relief mechanisms are free from obstruction to operate.

Relief Dampers inside Firebox should open and close freely.

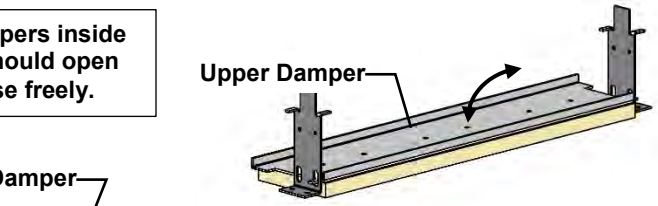

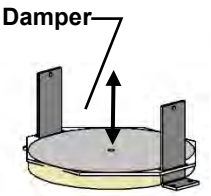

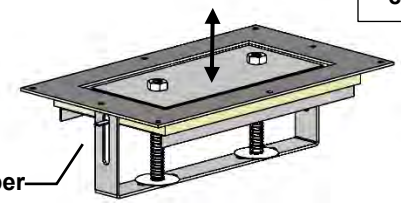

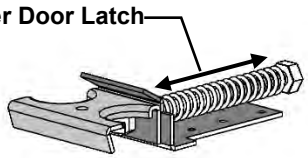

Spring loaded Door Latches should extend and return to the closed position.

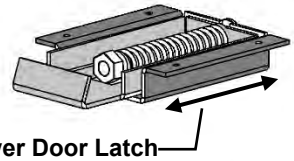

2. Clean glass window with a suitable fireplace glass cleaner. Abrasive cleaners must not be used. Be careful not to scratch the glass when cleaning.

3. Inspect the operation of the Pilot. Ensure that it is working properly.

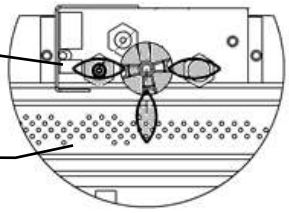



4. Inspect and ensure the lighting of the main burner occurs within 4 seconds of the main gas valve opening. Visual inspection should match that outlined in the appliance instruction manual (refer to ***Monthly Flame Inspection***). Inspect primary air openings for blockage.

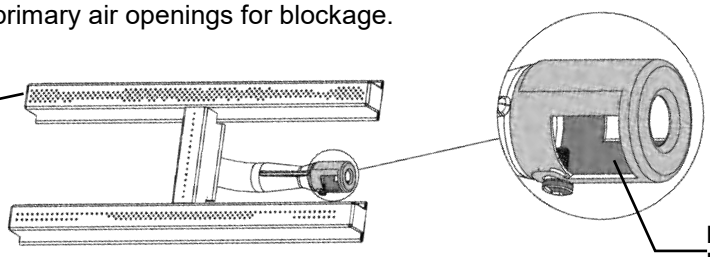

5. Inspect condition of vent and vent terminal for sooting or obstruction and correct if present.

6. Vacuum and clean any debris in the firebox that is not supposed to be there.

7. Test and measure the flame failure response time of the flame safety system. It must de-energize the safety shutoff in no more than 30 seconds.
Procedure for Millivolt Units: Turn on fireplace for 5 minutes. Shut off fireplace while listening to valve. A "click" should be heard within 30 seconds. This indicates the safety shutoff is working properly.
Procedure for IPI Units: Turn on fireplace and allow main burner to come on. Then disconnect Flame Sense wire from IPI Module (X3 Connection). The fireplace should shut down immediately.

8. Check all accessible gas-carrying tubes, connections, pipes and other components for leaks.

Burner System Maintenance

It is recommended to annually inspect and clean the Burner System to prevent malfunction and / or sooting. This operation should be performed by your dealer or a qualified technician.

⚠-CAUTION-

Before servicing the burner system ensure that the gas supply is turned OFF and disconnect all electrical connections to the appliance. Allow the appliance to cool to room temperature. Note that the pilot assembly may be hot in an intermittent or standing-pilot system—even if the main burner was never on. Exercise caution when working within the area.

-ALL WORK SHOULD BE PERFORMED BY A QUALIFIED AND CERTIFIED TECHNICIAN-

Monthly Flame Inspection

It is recommended to turn on the unit at least once a month and inspect the flame pattern to ensure there are no problems with the burner tube. The pilot flame should also be inspected monthly to ensure proper operation.



Flame should appear similar to the above picture.

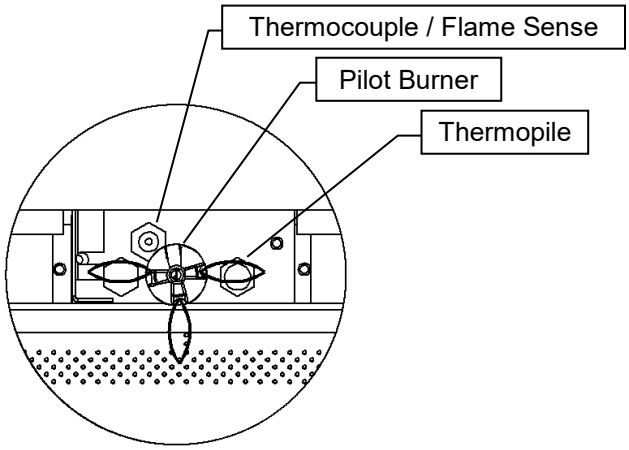

Pilot must maintain this relationship with Burner Tube.

Conversion Kit Instructions – PART A

Kit Number	Description	Pilot Orifice	Burner Orifice Brass (1000-255)	Brass Nipple	Air Shutter	Hi/Lo Regulator
39ZCV-CKLP	Propane Conversion	1001-P167SI	1/16”	1000-253 closed	Fully Open	1001-P202SI
42ZCV -CKLP	-Millivolt-	**#30** (977.167)	1/16”	1000-253 closed	Fully Open	(0.907.202)
39ZCV-CKNG	NG Conversion	1001-P165SI	#38	1000-253 closed	1/8”	1001-P201SI
42ZCV-CKNG	-Millivolt-	**#51** (977.165)	#38	1000-253 closed	1/8”	(0.907.201)
39ZCV-CKLPI	Propane Conversion	1001-P168SI	1/16”	1000-253 closed	Fully Open	1002-P014SI
42ZCV-CKLPI	-IPI -	**#35** (977.168)	1/16”	1000-253 closed	Fully Open	(0.907.014)
39ZCV-CKLP2	Propane Conversion	1001-P168SI	1/16”	1000-253 closed	Fully Open	1002-P012SI
42ZCV-CKLP2	-IPI -	**#35** (977.168)	1/16”	1000-253 closed	Fully Open	(907.012)
39ZCV-CKNGI	NG Conversion	1001-P166SI	#38	1000-253 closed	1/8”	1002-P016SI
42ZCV-CKNGI	- IPI -	**#62** (977.166)	#38	1000-253 closed	1/8”	(0.907.016)
39ZCV-CKNG2	NG Conversion	1001-P166SI	#38	1000-253 closed	1/8”	1002-P013SI
42ZCV-CKNG2	- IPI -	**#62** (977.166)	#38	1000-253 closed	1/8”	(907.013)
39ZCV-CKLPH	Propane Conversion	1001-P167SI	#51	1000-253 closed	Fully Open	1001-P202SI
42ZCV –CKLPH	-Millivolt-	**#30** (977.167)	#51	1000-253 closed	Fully Open	(0.907.202)
39ZCV-CKNGH	NG Conversion	1001-P165SI	#37	1000-253 closed	1/8”	1001-P201SI
42ZCV-CKNGH	-Millivolt-	**#51** (977.165)	#36	1000-253 closed	1/8”	(0.907.201)
39ZCV-CKLPHI	Propane Conversion	1001-P168SI	#51	1000-253 closed	Fully Open	1002-P014SI
42ZCV-CKLPHI	-IPI -	**#35** (977.168)	#51	1000-253 closed	Fully Open	(0.907.014)
39ZCV-CKLPH2	Propane Conversion	1001-P168SI	#51	1000-253 closed	Fully Open	1002-P012SI
42ZCV-CKLPH2	-IPI -	**#35** (977.168)	#51	1000-253 closed	Fully Open	(907.012)
39ZCV-CKNGHI	NG Conversion	1001-P166SI	#37	1000-253 closed	1/18”	1002-P016SI
42ZCV-CKNGHI	- IPI -	**#62** (977.166)	#36	1000-253 closed	1/8”	(0.907.016)
39ZCV-CKNGH2	NG Conversion	1001-P166SI	#37	1000-253 closed	1/8”	1002-P013SI
42ZCV-CKNGH2	- IPI -	**#62** (977.166)	#36	1000-253 closed	1/8”	(907.013)

Refer to “**Gas Specifications Chart**” for inlet pressures and input ratings. Clock meter to verify input rate. Place conversion label as close to converted gas control as possible. Refer to lighting instructions to verify the normal operating sequence of the ignition system. IMPORTANT: Always check for gas leaks with a soap and water solution. DO NOT USE OPEN FLAME FOR LEAK TESTING.

Gas Conversion Part A ZCV39 / ZCV42

IMPORTANT: Always check for gas leaks with a soap and water solution. DO NOT USE OPEN FLAME FOR LEAK TESTING.

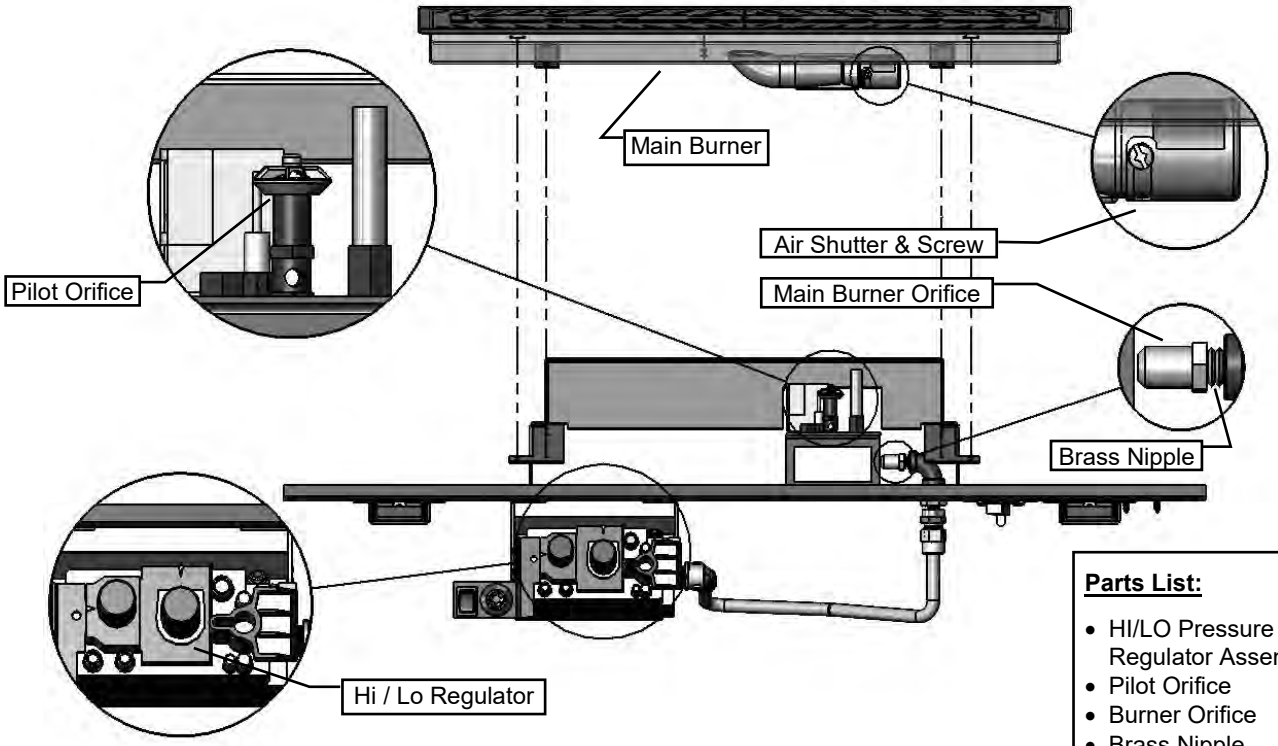

Parts List:

- HI/LO Pressure Regulator Assembly
- Pilot Orifice
- Burner Orifice
- Brass Nipple
- Instructions
- Conversion Kit Label

1. The Main Burner must be removed from the Burner Pan Assembly (See **Burner Removal Section**). Adjust the Air Shutter to the correct Primary Air setting as specified in the manual or on the label plate. To adjust the Primary Air setting, loosen screw on the side of the Air Shutter and rotate to the correct opening using a drill bit or tape measure. Retighten screw.
2. Remove the Main Burner Orifice using a ½" wrench and replace with the new Conversion Orifice which came with the Conversion Kit.
3. Replace the Main Burner. Install the new Pilot Orifice (See **Pilot Conversion**) and Hi/Lo valve regulator by following instructions supplied with the Conversion Kit.

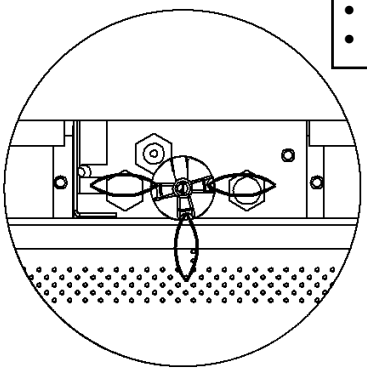

Pilot Must Maintain This Relationship With Main Burner.

Refer to "**Gas Specifications Chart**" for inlet pressures and input ratings. Clock meter to verify input rate. Place conversion label as close to converted gas control as possible. Refer to lighting instructions to verify the normal operating sequence of the ignition system.

⚠-Warning-

This conversion kit shall be installed by a qualified service agency in accordance with the manufacturer's instructions and all applicable codes and requirements of the authority having jurisdiction. If the information in these instructions is not followed exactly, a fire, explosion or production of carbon monoxide may result causing property damage, personal injury or loss of life. The qualified service agency is responsible for the proper installation of this kit. The installation is not proper and complete until the operation of the converted appliance is checked as specified in the manufacturer's instructions supplied with the kit.

⚠Caution:

The gas supply shall be shut off prior to disconnecting the electrical power, before proceeding with the conversion.

SIT Gas Conversion for Top Convertible Pilot – Part B (series 0190XYZ)

Instructions for converting SIT 190 series pilot burner injector from NG to PROPANE and from PROPANE to NG only. This information should be considered as supplemental to the Appliance Manufacturer's Instructions.

WARNING! The installation of this conversion kit must only be undertaken by a qualified and certified gas appliance installer.

1. Shut-off the gas supply to the appliance.
2. Allow the pilot burner to cool to room temperature.

   WARNING: Touching a hot pilot burner can result in injury.

3. The pilot hood is held in place by spring. First remove the spring, then remove the hood by pulling it up from the pilot bracket (fig. 1).
4. Insert a 5/32" or 4 mm Allen wrench into the hexagonal key-way of the injector (fig. 2), and rotate it counter-clockwise until it is free of the injector journal.
5. Verify that the new injector is proper for the application. The injector size is stamped on the side of the injector near the top. Propane injectors have a groove machined around their circumference near the top, while NG injectors do not have a groove (fig. 4). Refer to the Appliance Manufacturer's instruction sheet for the proper injector size.
6. Insert the Allen wrench into the end of the injector. Then, insert the injector into injector journal, and rotate the injector clockwise until a torque of 9 lbf in (1.0 Nm) is achieved.
7. First replace the pilot hood by aligning the tab on the base of the hood with the slot in the side of the pilot journal, and push the hood down, onto the pilot bracket (fig. 3). The hood must sit squarely on the bracket for proper operation. Then replace the spring by pushing it on his seat (fig.3). Check to insure that the hood is properly seated onto the pilot bracket and that the spring is properly inserted onto his seat.
8. Restore the gas supply to the appliance, and ignite the pilot burner. Verify proper ignition and operation.

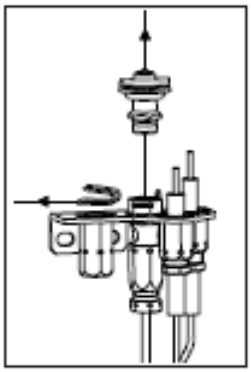

fig. 1

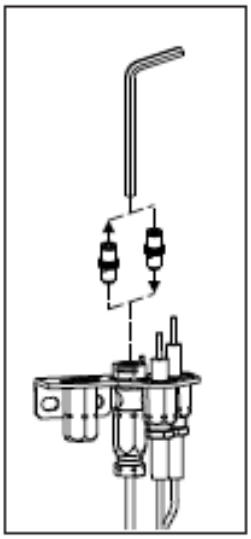

fig. 2

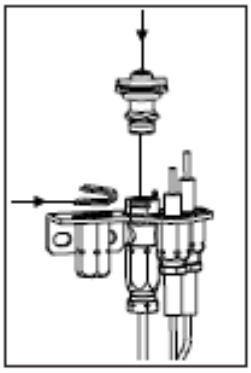

fig. 3

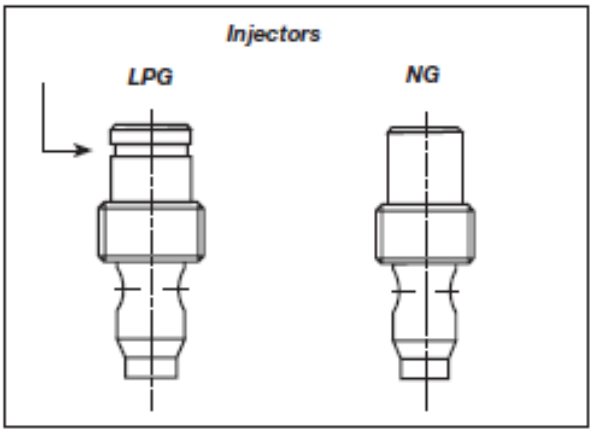

fig. 4

WARNING!

This conversion kit must ONLY be applied as part of a conversion kit supplied by the APPLIANCE MANUFACTURER for the specific appliance, and type of gas, being converted.

SIT GROUP

www.sitgroup.it

installationinstructions

7.252.136

820 NOVA mV

Modulating Conversion Kit

WARNING!
The installation of this conversion kit must only be undertaken by a qualified and certified gas appliance installer.

MODULATING PRESSURE REGULATOR CONVERSION KIT INSTALLATION OR REPLACEMENT INSTRUCTIONS.

1 *Turn control knob to the OFF position, and shut off the gas supply to the valve.*

2 *Using a Torx T20, or slotted screwdriver, remove and discard the three pressure regulator mounting screws (A), pressure regulator tower (B), and the spring and diaphragm assembly (C) . (If applicable)*

3 *Insure that the rubber gasket (D) is properly positioned and install the new modulating pressure regulator assembly to the valve using the new screws (E) supplied with the kit. Tighten screws securely. (Reference torque = 25 In.Lb.)*

4 *Install the enclosed identification label (F) to the valve body where it can be easily seen.*

5 *Apply gas to system and re-light appliance according to manufacturers instructions.*

6 *With the main burner "ON", test the new pressure regulator assembly for leaks using a soap solution.*

7 *Relight the main burner in both the HI and LO positions, and verify proper burner ignition and operation.*

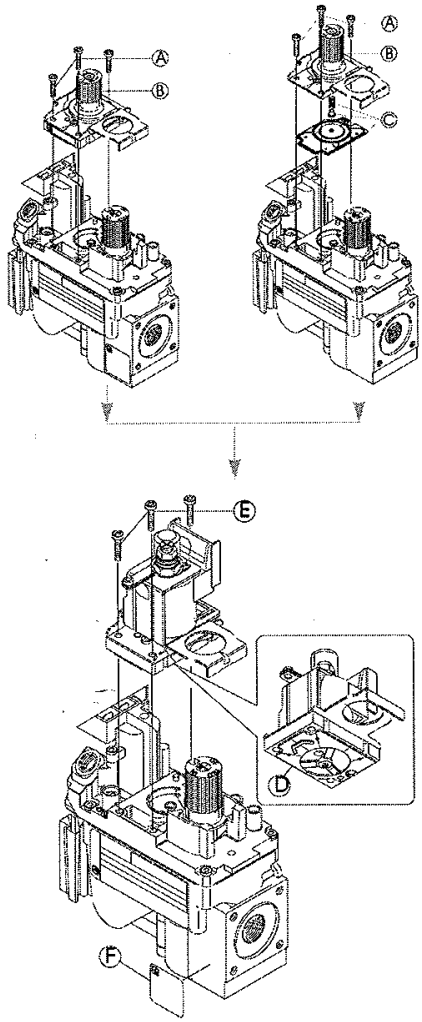

WARNING!
This modulating conversion kit must ONLY be applied as part of a conversion kit supplied by the APPLIANCE MANUFACTURER for the specific appliance, and type of gas, being converted.

INSTALLER NOTICE. These instructions must be left with appliance.

SIT Group

ZCV39 / ZCV42 Burner Removal

To remove grate, remove two [2] screws from grate bar assembly.

To remove burner, remove four [4] screws from burner. Slide burner to the left and lift to remove.

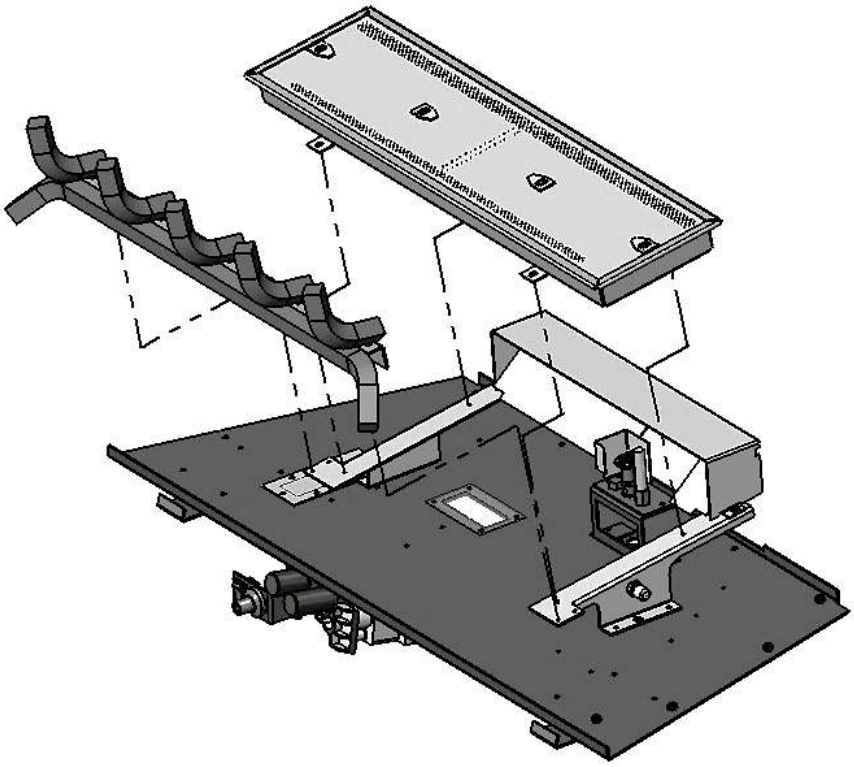

⚠ WARNING

Turn off Unit and allow to cool before cleaning. Only a Qualified service technician should service and repair this appliance.

ZCV39 / ZCV42 Burner System Removal / Installation

Removal: Remove Log Holder, Bottom Door Latches, Burner, and Log Grate. Remove fourteen [14] screws around edge of Burner Pan. Carefully work the burner pan loose & lift the assembly upward to remove it from the firebox cavity.

Installation is the reverse of these steps. Ensure that the mounting surface is clean. Use fresh **Black Mill Pac** to reseal the burner pan.

⚠ WARNING

Turn off Unit and allow to cool before cleaning. Only a Qualified service technician should service and repair this appliance.

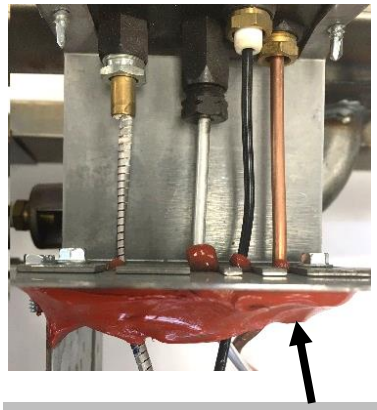

NOTE: Pilot connections through Burner Pan must be sealed with **Red Silicone**.

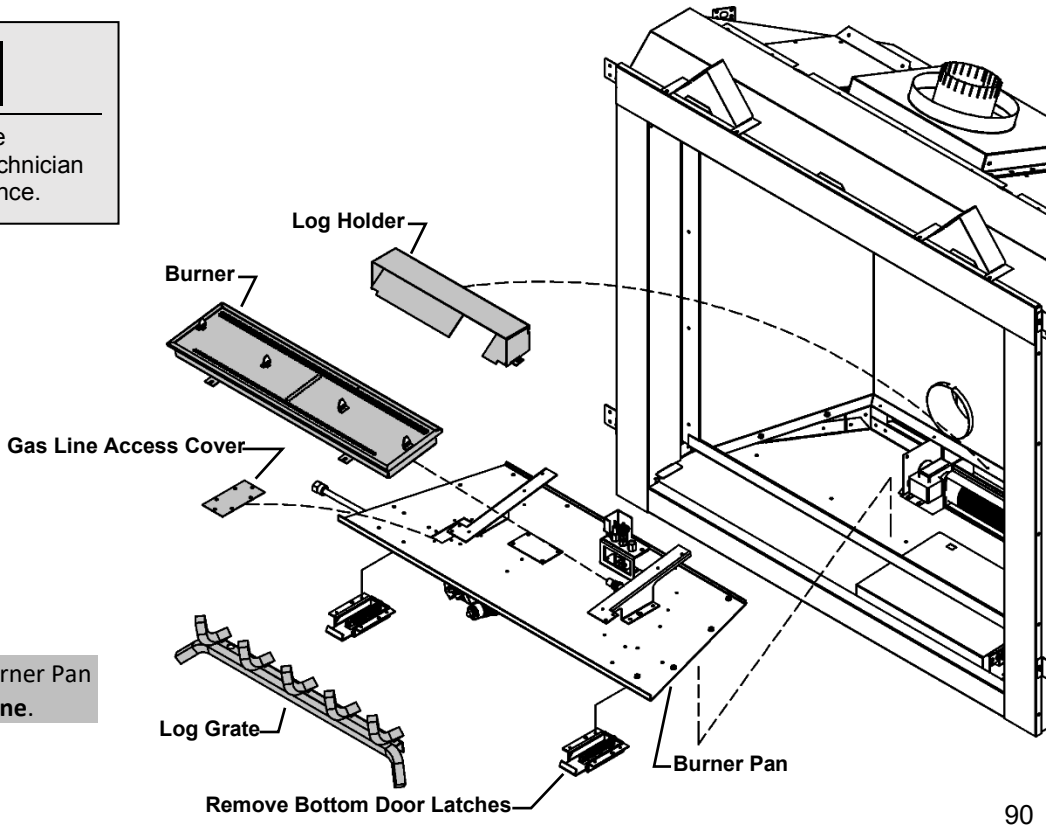

IPI Electronic Ignition System

Overview

The IPI system is an advanced burner controller that provides you with the option of having either a Standing-Pilot, or an intermittent igniting system. This alternating mode is controlled by the CPI/IPI Switch (Continuous Pilot Ignition/Intermittent Pilot Ignition) located on the IPI System Box. The difference between a Standing-Pilot and an Intermittent-Pilot is in whether the pilot stays lit or shuts off:

In Standing-Pilot, the pilot assembly is lit by the IPI Main Module and continues to stay lit until 1) the CPI/IPI Switch is switched to the IPI position; 2) a loss of electrical power (battery and AC source), 3) the flame sensor loses its signal, 4) the fuel supply discontinues, or 5) the IPI Main Module malfunctions.

In the Intermittent-Pilot mode, the pilot shuts off when the appliance is not in use. The advantage of this mode is that fuel is not consumed when the fireplace is not operating.

NOTE: In some jurisdictions Intermittent-Pilot is required. That means the pilot cannot remain lit when the appliance is not operating.

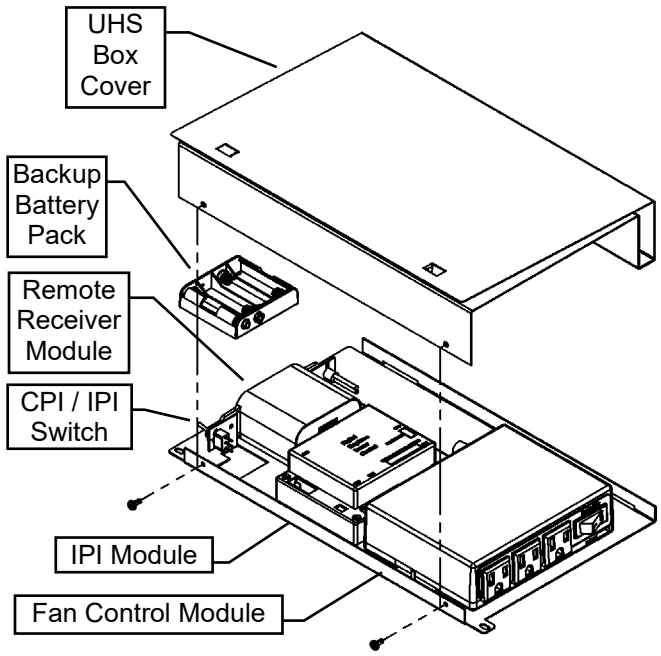

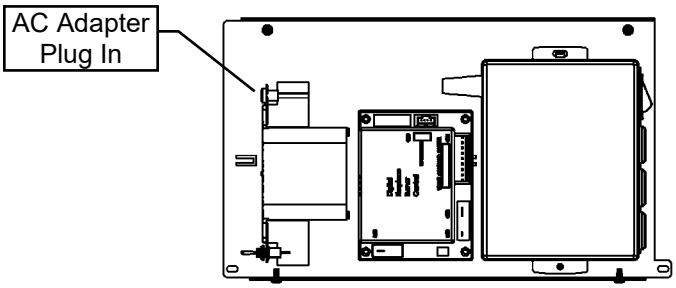

Components

The core of the IPI system is the Main Module and the IPI Valve. With these two components the system is able to operate a gas fireplace. There are also other components available to complement the IPI system.

IPI System Cover: Is essential in keeping the components at their proper operating temperatures. **DO NOT OPERATE THE APPLIANCE WITHOUT THIS COVER.**

Modulating Servo Motor: Is an add-on valve component that permits HI/LO functionality to be controlled by the remote. Contrary to this feature is a Manual HI/LO Control Knob. The Modulating Servo Motor requires the Remote system to be present.

Backup Battery Pack: This component permits the IPI system to operate without the need for an external AC Adapter power source. The advantage to using the battery backup is that in the case of a power failure, the appliance is still operable.

NOTE: In certain instances the IPI Main Module requires resetting. This can occur if the system is unable to ignite the pilot or the main burner in the allotted time period. The IPI is programmed to lockout all commands. To reset this lockout you must deplete the system of all electrical power. This means to remove the batteries from the Battery Pack, remove the batteries from the Remote Receiver (if applicable), and disconnect the AC Adapter from the system. Leave the power off for approximately 25 seconds to clear its lockout.

Remote Receiver: This component provides the capability of controlling the appliance with a wireless remote transmitter.

Standing Pilot Mode for Colder Climates (Below Freezing)

For IPI models it may be necessary to set the appliance to Standing Pilot mode to maintain heat in the cavity. The purpose of this procedure is to prevent cold air from penetrating the chimney and then onto the living space. Therefore, when the internal temperature is slightly elevated the fireplace is able to freely exhaust its combustion and hence making it easier to startup.

NOTE: The pilot system for this appliance may be equipped with a Seven Day Timer, in which case the pilot flame will be extinguished if the main burner has not been turned ON for seven days. This Seven Day Cycle is reset every time the main burner is cycled ON / OFF and the pilot remains lit. If more than seven days has passed since the main burner has been cycled ON / OFF and the pilot is also out, follow the procedures described in this manual to light the pilot.

Proflame 1 -Remote Control Operation-

The Proflame GTM is configured to control the on/off main burner operation, its flame levels, and provides on/off and Smart *thermostatic control of the appliance.

Transmitter

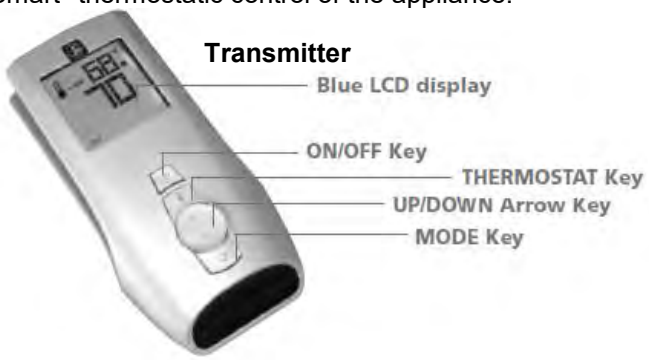

Remote Receiver



Transmitter
The Transmitter is powered by 3 AAA type batteries. A Mode Key is provided to Index between the features and a *thermostat Key is used to turn on/off or index through *thermostat functions

Remote Receiver
The Receiver connects directly to the gas valve and stepper motor with a wiring harness. The Receiver is powered by 4 AA type batteries. The Receiver three position slider switch can be set to one of three positions: ON (Manual Override), Remote (Remote control) or Off.

Initializing the System for the first time
Install 4 AA batteries into the receiver battery bay. Install 3 AAA type batteries in the Transmitter battery bay.
Place the 3 position slider switch in the “Remote” position. Insert the end of a paper clip into the hole marked “PRG” on the Receiver front cover. The Receiver will “beep” three (3) times to indicate that it is ready to synchronize with a Transmitter. Push the On button. The Receiver will “beep” four times to indicate the Transmitter’s command is accepted. The system is now initialized.

Temperature indication Display
With the system in the “OFF” position, press the *thermostat Key and the Mode Key at the same time. Look at the LCD screen on the Transmitter to verify that a C or F is visible to the right of the Room Temperature display.

Turn the Appliance On or Off
Press the ON/OFF Key on the Transmitter

Remote Flame Control
The Proflame GTM has six (6) flame levels. Pressing the Down Arrow Key once will reduce the flame height by one step until the flame is turned off. The Up Arrow Key will increase the flame height each time it is pressed. If the Up Arrow Key is pressed while the system is on but the flame is off, the flame will come on in the high position.

Room *thermostat (Transmitter Operation)
The Remote Control can operate as a room *thermostat. To activate this function, press the *thermostat Key. The LCD display on the Transmitter will change to show that the room *thermostat is “ON” and the set temperature is now displayed. To adjust the set temperature, press the Up or Down Arrow Keys until the desired set temperature is displayed on the LCD screen of the Transmitter.

Smart *thermostat (Transmitter Operation)
The Smart *thermostat function adjusts the flame height in accordance to the difference between the set point temperature and the actual room temperatures. As the room temperature gets closer to the set point the Smart Function will modulate the flame down. To activate this function, press the *thermostat Key until the word "SMART" appears to the right of the temperature bulb graphic. To adjust the set temperature, press the Up or Down arrow Keys until the desired set point temperature is displayed.

Key Lock Function
This function will lock the keys to avoid unsupervised operation. To activate this function, press the MODE and the UP Arrow Key at the same time. To de-activate this function, press the MODE and the UP Arrow Key at the same time.

Low Battery Detection
Transmitter - When the Transmitter batteries are low, a Battery Icon will appear on the LCD display of the Transmitter.
Receiver - When the Receiver batteries are low, No “beep” will be emitted from the Receiver when it receives an On/Off command from the Transmitter. When the batteries are replaced the “beep” will be emitted from the Receiver when the ON/OFF Key is pressed (See Initializing the System for the first time).

Manual Bypass Of The Remote System
If the batteries of the Receiver or Transmitter are low or depleted, the appliance can be turned on manually by sliding the three position slider switch on the Receiver to the ON position. This will bypass the remote control feature and the appliance main burner will come on if the gas valve is in the “On” position.

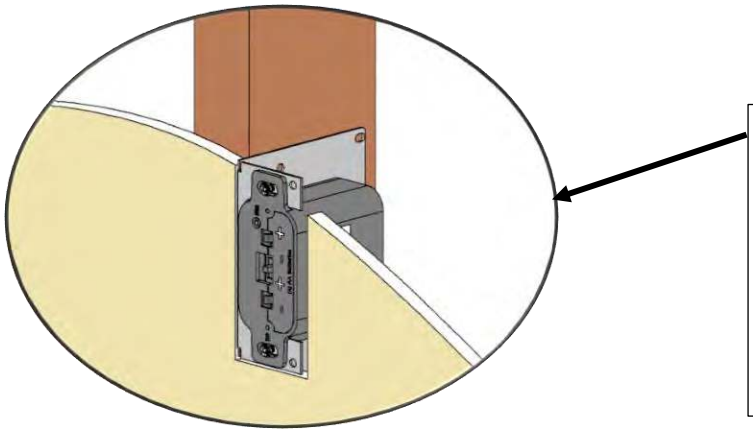

<u>Wall Mount Option</u>

10ft. Extension Harness (Part No. 1001-P904SI) required.

- The Remote Receiver can be mounted on a vertical wall stud using the DCHS as a mounting bracket.
- Ensure that the face is protruding 1/2” so that the face plate will be flush on the face of the wall.
- Drywall cutout size is 2” wide by 4-1/8” tall.
- Must be installed within 10ft of valve assembly (6ft recommended).

SIT Proflame 1 -IPI System Parts List-

	PART NO.	DESCRIPTION
1.	1006-P002SI	Valve IPI Hi/Lo NG
2.	1006-P003SI	Valve IPI Hi/Lo LP
3.	1002-P322SI	IPI Ignition Board
4.	1002-P047SI	Pilot Assembly-LP -24" Wire
5.	1002-P033SI	Pilot Assembly-NG -24" Wire
6.	1002-P850SI	AC Wall Adapter
7.	1002-P12BH	Battery Pack
8.	1001-P280SI	TC - Tubing W/Fittings 1/8 2.182.280
9.	1001-P166SI	TC - Orifice Pilot NG 977.166 #62 (IPI)
10.	1001-P168SI	TC - Orifice Pilot LP 977.168 #35 (IPI)
11.	1002-P012SI	IPI Stepper Kit - LP 907.012
12.	1002-P013SI	IPI Stepper Kit - NG 907.013
13.	1002-P014SI	IPI Reg Kit - LP Hi-Lo 907.014
14.	1002-P016SI	IPI Reg Kit - NG Hi-Lo 907.016
15.	1002-P017SI	TC - Electrode Cable & Sparker IPI 915.017 24"
16.	1002-P119SI	TC - Electrode Cable & Sparker IPI 35" (Infinite, ZCVRB47, VRB46)
17.	1002-P903SI	TC - Electrode Flame Sense IPI 007.253/915.903 24"
18.	1002-P910SI	TC - Electrode Flame Sense 35" (Infinite, ZCVRB47, VRB46)

NOTE: Fan and / or Light Options are not available on some fireplaces. **Check with your dealer.**



Proflame Transmitter
1001-P023SI

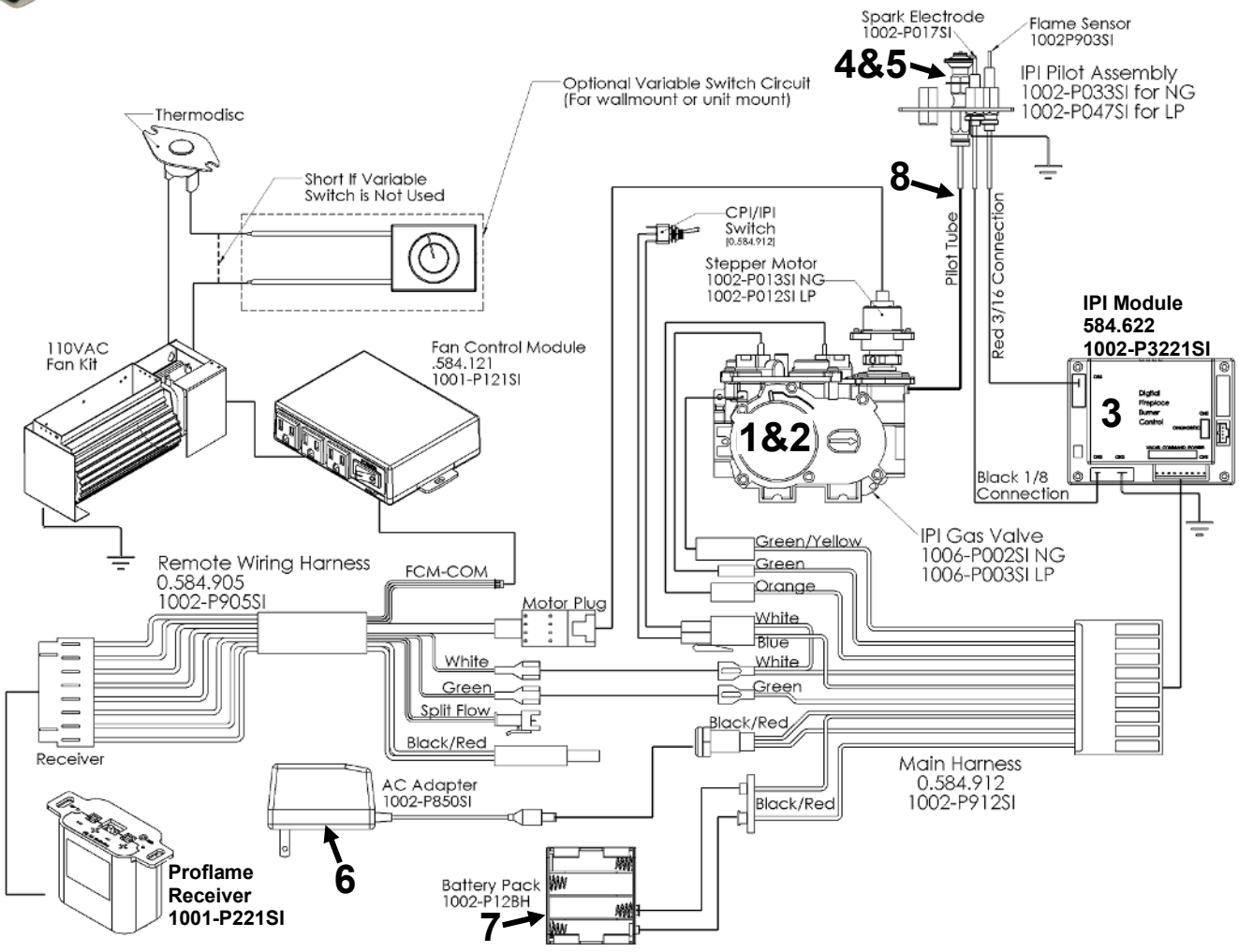

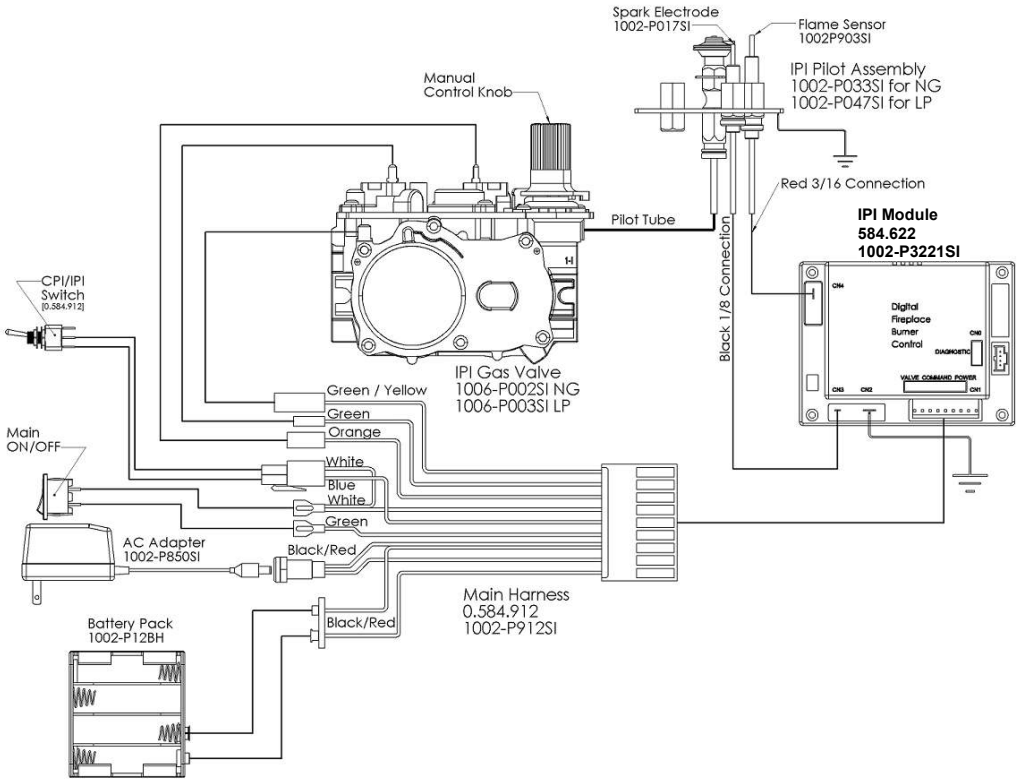

Configuration #1: Basic manual HI/LO and manual ON/OFF capabilities.

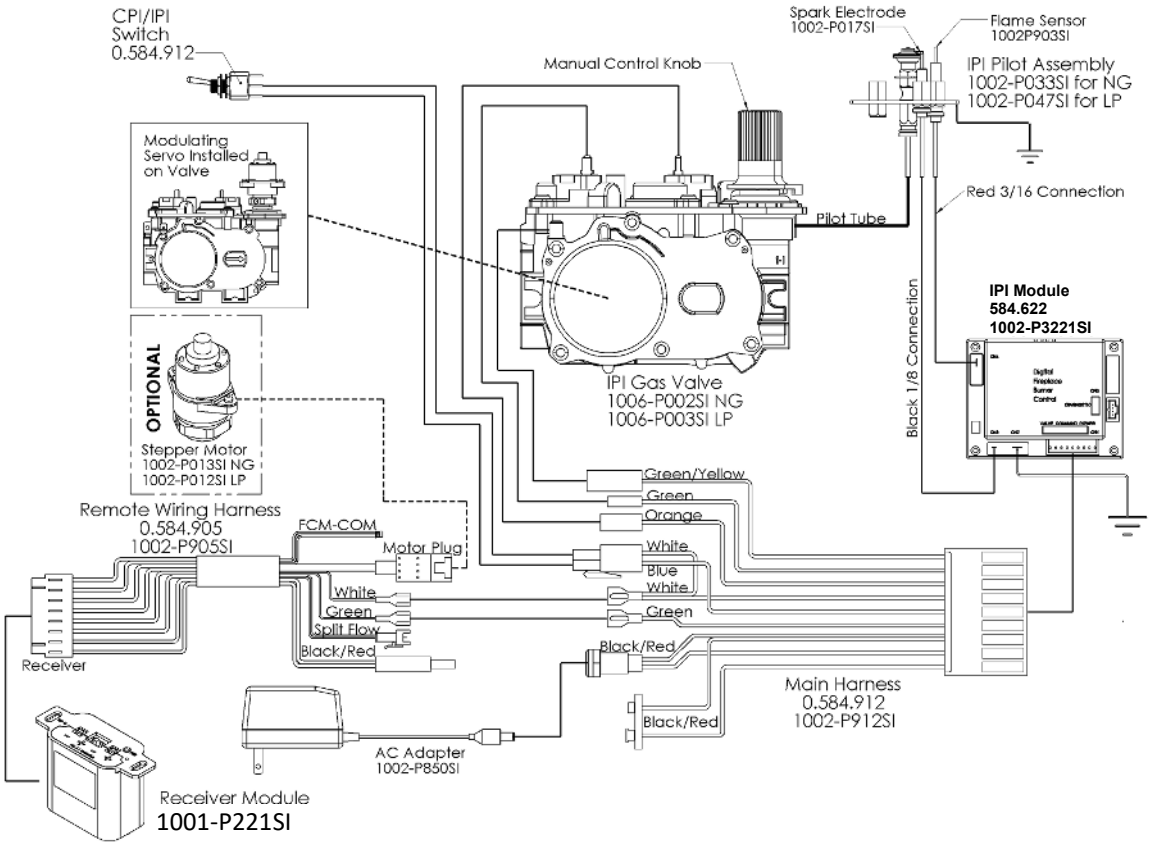

Configuration #2: Remote ON/OFF and Manual HI/LO Capabilities

OPTIONAL: For units with remote HI/LO capabilities, a modulating servo is required to be installed on the valve. The connectors to this servo must be connected to the Remote Harness as shown.

SIT Proflame 1 -Operating Receiver Without Batteries- GT / EGT / GTM / EGTM Remotes

-Wiring Harness P/N 1002-P906si required for both IPI & Millivolt systems.
-Millivolt Systems will also require Power Adapter P/N 1002-P850si.

The Remote Receiver & IPI or Millivolt system can be powered by the AC Adapter. This is advantageous if you do not want to use batteries. Simply connect the AC Adapter into the Remote Control Wiring Harness as per the diagrams below.

IPI System EGTM

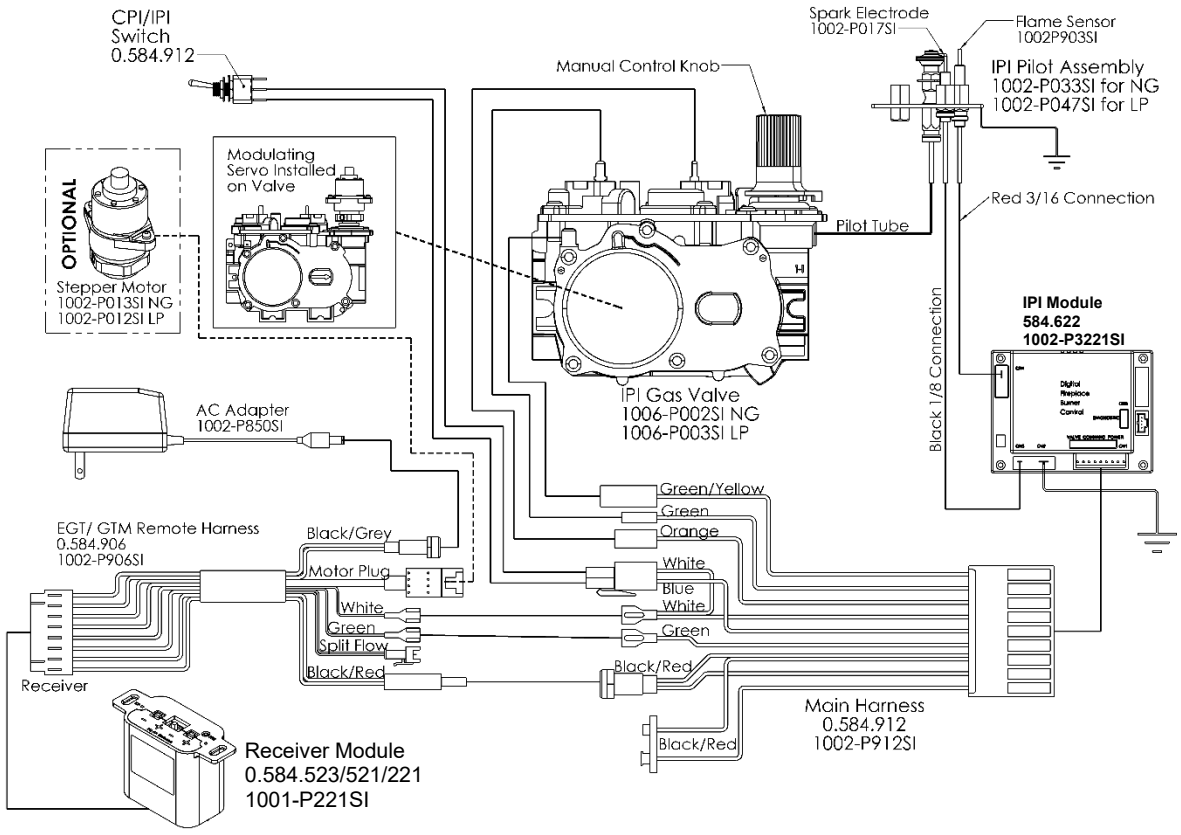

Millivolt System GTM

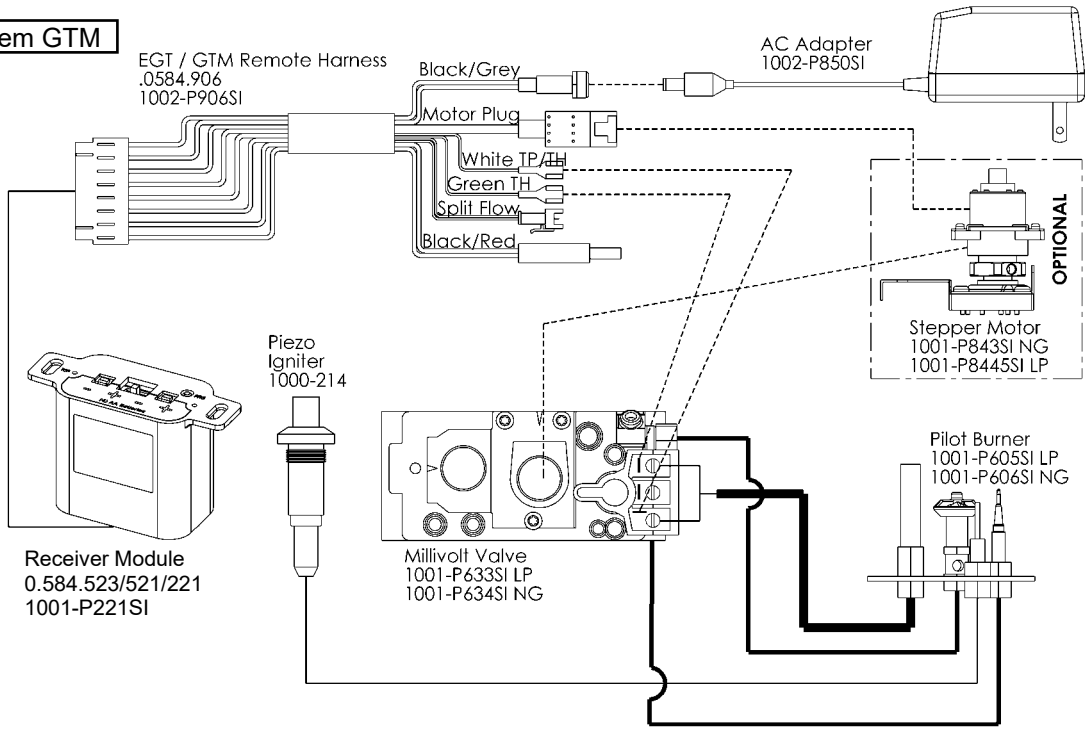

SIT Proflame 1- Configuration #3: Remote ON/OFF, variable HI/LO, and fan capabilities

Refer to the fan installation/removal section for fan installation.

SCHEMATIC

NOTE: This Configuration is not available on all models of fireplace. **Check with your dealer.**

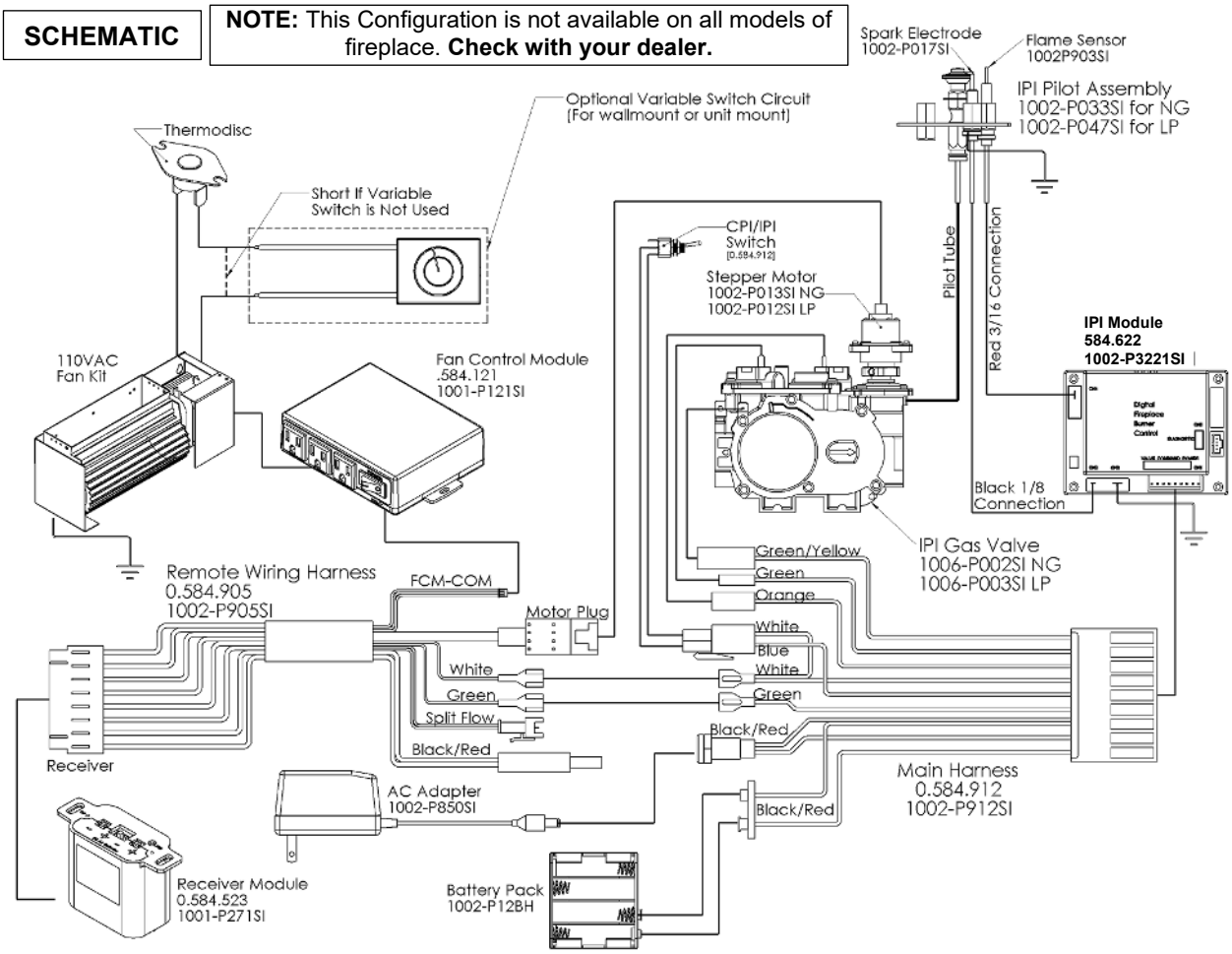

PICTURE

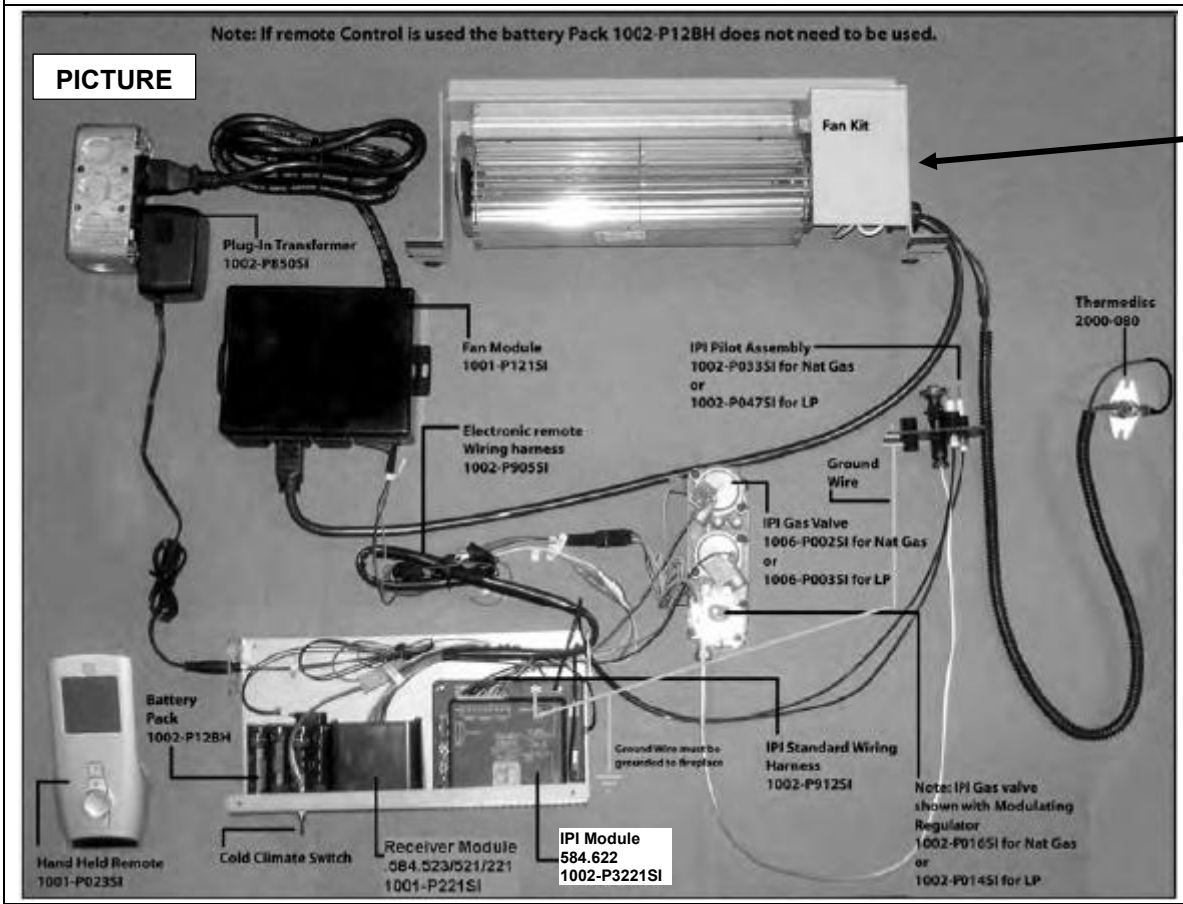

NOTE: Fan Option is not available on some models of fireplace. **Check with your dealer.**

- IPI LIGHTING INSTRUCTIONS -

FOR YOUR SAFETY READ BEFORE LIGHTING

WARNING: If you do not follow these instructions exactly, a fire or explosion may result causing property damage, personal injury or loss of life.

A. This appliance is equipped with an ignition device which automatically lights the pilot. Do not try to light the pilot by hand.

B. **BEFORE OPERATING** smell around the appliance area for gas. Be sure to smell next to the floor because some gas is heavier than air and will settle on the floor.

WHAT TO DO IF YOU SMELL GAS

- Do not try to light any appliance.
- Do not touch any electric switch; do not use any phone in your building.
- Immediately call your gas supplier from a neighbor's phone. Follow the gas supplier's instructions.
- If you cannot reach your gas supplier, call the fire department.

C. Do not use this appliance if any part has been under water. Immediately call a qualified service technician to inspect the appliance and replace any part of the control system and any gas control which has been under water.

D. If the gas valve requires repair, call a qualified service technician. Force or attempted repair may result in a fire or explosion.

OPERATING INSTRUCTIONS

1. Stop! Read the safety information above on this label.
2. Read the owner's manual including the section on "Remote Control" operation if applicable.
3. Turn off all electric power to the appliance.
4. This appliance is equipped with an ignition device which automatically lights the pilot. Do not try to light the pilot by hand.

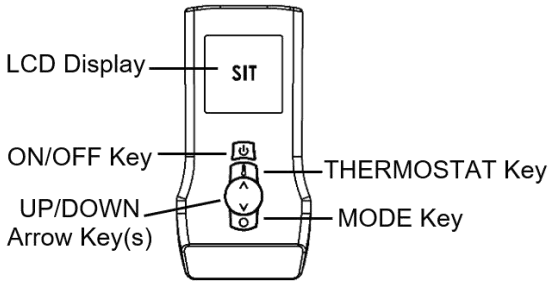

5. Wait five (5) minutes to clear out any gas. Then smell for gas, including near the floor. If you smell gas, STOP! Follow "B" in the safety information above this label. If you do not smell gas, go to next step.
6. Turn on all electric power to the fireplace.
7. Turn "On" Switch that operates the Main Burner. For **Remote Control** units, press the ON/OFF key on the remote control. "ON" will be displayed on the LCD display and a "beep" will be heard at the unit to indicate the command has been received.
8. If the appliance will not operate, follow the instructions "To Turn Off Gas To Appliance" and call your service technician or gas supplier.

TO TURN OFF GAS TO APPLIANCE

1. Set thermostat to lowest setting. For **Remote Control** units, press the ON/OFF key on the remote control. "OFF" will be displayed on the LCD display and a "beep" will be heard at the unit to indicate the command has been received.
2. Turn off all electric power to the fireplace if service is to be performed.

Proflame 2 –NE2 / LPE2 -IPI System Parts List-

IPI PROFLAME 2 - COMPONENT PARTS		
	PART NO.	**DESCRIPTION**
1.	1005-P001SI	Valve IPI Proflame PF2 885.001 NG - Stepper
2.	1005-P002SI	Valve IPI Proflame PF2 885.002 LP - Stepper
3.	1005-P325SI	Module IPI - Proflame 2 - 584.325
4.	1005-P627SI	Module IPI – Proflame 2 - Basic - 584.627
5.	1005-P924SI	Harness PF2 - 584.924
6.	GTMFL	Transmitter- PF2 - 584.090 - WiFi Version
6b.	1005-P042SI	Transmitter- PF2 - 584.042 - Non-WiFi Version
6c.	1005-P080SI	Transmitter- PF2 - 584.080 - WiFi Version
For Replacement Transmitters, Replace with Same Part Number		
7.	584-PWR-C	Wire Harness PF2 – Power Cord
8.	584-X4P	Terminal Block
9.	584-X10	Wire Harness PF2
10.	584-ACC01-C	Wire Harness PF2 - Fan/Light
11.	584-X8-B	Wire Harness PF2 - Optional Reset Harness
12.	584-X12	Optional Power Vent Harness

IPI - PF1 and PF2 Common Components			
	PART NO.	**DESCRIPTION**	
13.	1002-P033SI	TC - Pilot Burner IPI (Assembled) NG 199.033	
14.	1002-P047SI	TC - Pilot Burner IPI (Assembled) LP 199.047	
15.	1001-P166SI	TC - Orifice Pilot NG 977.166 #62 (IPI)	
16.	1001-P168SI	TC - Orifice Pilot LP 977.168 #35 (IPI)	
17.	1001-P280SI	TC - Tubing W/Fittings 1/8 2.182.280	
18.	1002-P012SI	IPI Stepper Kit - LP 907.012	**P2 CONVERSION**
19.	1002-P013SI	IPI Stepper Kit - NG 907.013	
20.	1002-P014SI	IPI Reg Kit - LP Hi-Lo 907.014	**P1 CONVERSION**
21.	1002-P016SI	IPI Reg Kit - NG Hi-Lo 907.016	
22.	1002-P017SI	TC - Electrode Cable & Sparker IPI 915.017 24"	
23.	1002-P119SI	TC - Electrode Cable & Sparker IPI 35" (Infinite, ZCVRB47, VRB46)	
24.	1002-P12BH	IPI Battery Housing 12bh347-Gr	
25.	1002-P903SI	TC - Electrode Flame Sense IPI 007.253/915.903 24"	
26.	1002-P910SI	TC - Electrode Flame Sense 35" (Infinite, ZCVRB47, VRB46)	

6 **Proflame Transmitter**
0.584.090 - WiFi
Current Version



6b **Proflame Transmitter**
0.584.042 - Non-WiFi

6c **Proflame Transmitter**
0.584.080 - WiFi



NOTE: Fan and / or Light Options are not available on some fireplaces. **Check with your dealer.**

NOTE: When in Thermostat Mode, the fan has a 5-minute startup delay, and a 12-minute shutdown delay.

Proflame 2 IPI - IFC Module and Remote Control

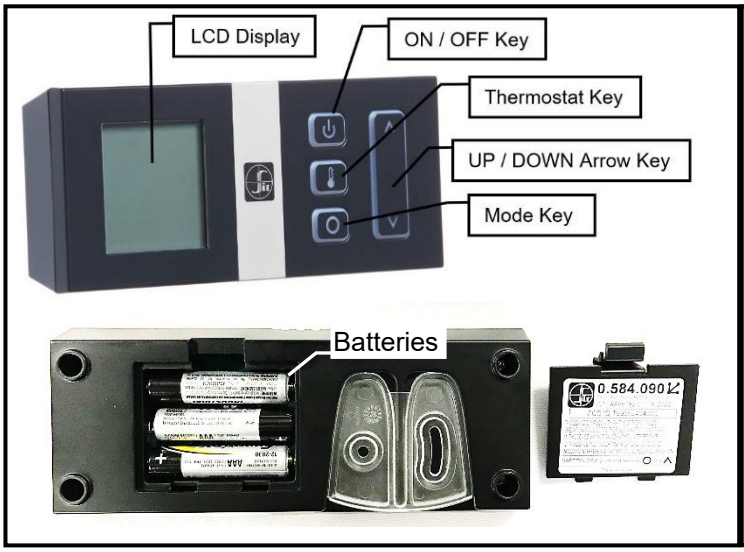

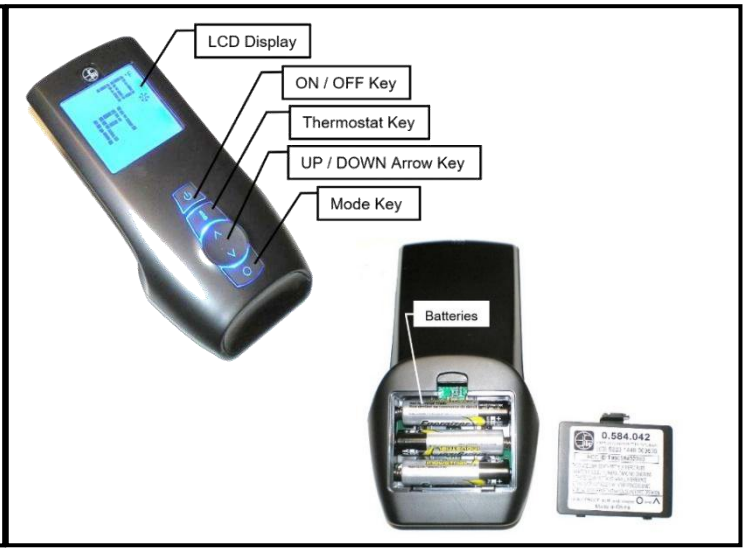

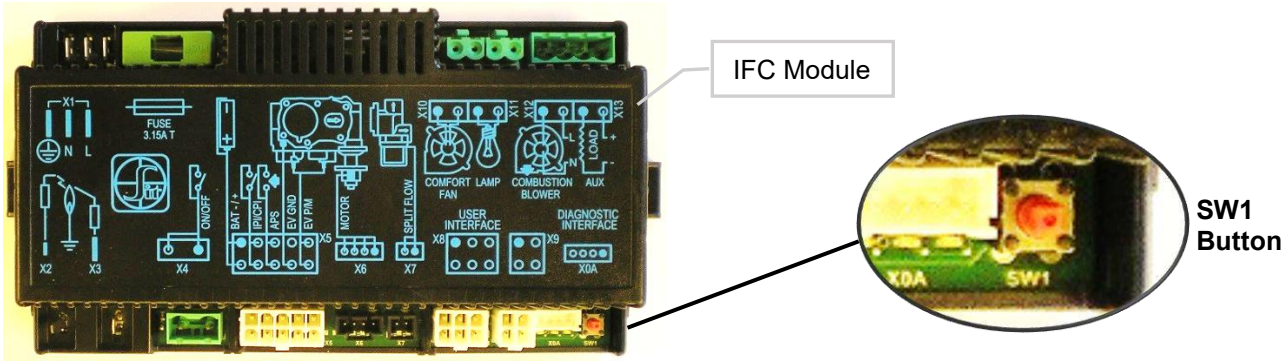

Pairing Remote Control:

- Install the 3 AAA type batteries in the battery bay, located on the base of the Remote Control. Note polarity of the batteries and insert them as indicated.
- Connect the AC power supply to the IFC Module.
- Press the SW1 button on the IFC Module so the IFC will “beep” and a red LED is illuminated to indicate that the IFC Module is ready to synchronize with a Remote Control within 10 seconds. With the batteries already installed in the Remote Control, push the ON button. The receiver will “beep” four times to indicate the Remote Control’s command is accepted.

The system is now initialized.

Resetting Proflame 2 IFC Module for Manual Use

If the transmitter gets misplaced, is broken, or is no longer wanted the PF2 Module can be reset to a manual system. A manual on/off switch or thermostat may be installed at the X4 connector (this connection is Jumped at the factory) no power is required.

Note: the fireplace accessories (fan, lights) will retain the last settings they had before being reset to manual mode.

The following sequence must be followed to reset the PF2 Module:

- Press the Red **SW1** button until you hear three beeps.
- Within 10 seconds press the **SW1** button again until you hear it beep.
- The PF2 Module may now be turned on/off manually (x4 connector) by a switch (not supplied), the pilot will remain on CPI (continuous pilot ignition) mode, all other functions of main burner, fan and lights will be on the high setting.

Fan Startup and Shutdown Timings:

Fan setting is started with a delay of 5 minutes from the fireplace ignition and stopped with a delay of 12 minutes from the fireplace switching off.

Low Battery Power Detection

When the Remote Control’s batteries are low, a Battery Icon will appear on the LCD display before all power is lost. When the batteries are replaced, this icon will disappear.

Battery Backup

The PF2 module is powered by line voltage (AC) with provision of battery backup in case of main power loss. Fans and lighting features will not function with the PF2 Module is powered by battery backup. It is recommended that the 4 x AA batteries are changed before each heating season.

24 Hour Safety Shut Off

If a transmission (user action) has not been detected by the receiver within 24 hours, the system will shut off as a safety feature.

Cold Climates – CPI Setting - Proflame 2 Remote Control

Use the CPI setting during cold weather, otherwise the fireplace may have a hard time starting up and establishing a flame. The **CPI** (Continuous Pilot Ignition) setting will keep the firebox and fireplace exhaust vent warm during cold weather. When the firebox and exhaust vent are warm, exhaust gasses will readily flow out of the firebox.

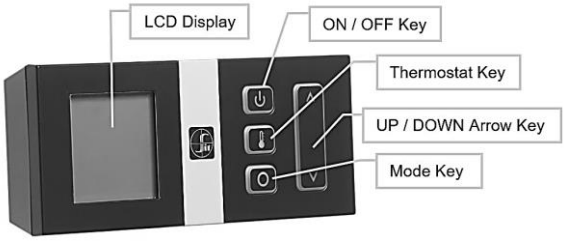



If the firebox and venting are too cold, there is resistance due to the heavy cushion of cold air, and combustion gasses may not rise into the exhaust vent, thus causing the fireplace to cycle or **Lockout** (if this happens see ***Lockout Reset Procedures*** below).

NOTE: The pilot system for this appliance may be equipped with a **Seven Day Timer**, in which case the pilot flame will be extinguished if the main burner has not been turned ON for seven days. This Seven Day Cycle is reset every time the main burner is cycled ON / OFF and the pilot remains lit. If more than seven days has passed since the main burner has been cycled ON / OFF and the pilot is also out, follow the procedures described in this manual to light the pilot.

To switch from IPI to CPI Mode:

1. Turn the fireplace OFF using the **ON / OFF Key**.



2. Press the **Mode Key**. Display will appear as below.



3. Press UP on the **UP / DOWN Arrow Key**.
Display will show **CPI.**

The module in the fireplace will beep once to confirm command.



TO RETURN TO IPI (INTERMITTENT PILOT) MODE:

Repeat steps one and two, and then press DOWN on the **UP / DOWN Arrow Key**.

The module in the fireplace will beep once to confirm command.

Lockout Reset Procedures – Proflame 2

If the fireplace has cycled too many times in a short period of time, it will shut down and become unresponsive to any new command.

The LED light on the Proflame 2 module in the fireplace will be flashing red.

This condition is a **Lockout** state.

Lockout Reset Procedure:

1. Disconnect power from the Proflame 2 module in the fireplace for 10 seconds. This includes removing the backup batteries.
2. Once the 10 second interval has passed, reconnect power and reinstall backup batteries. The pilot should now try to light.
3. If the fireplace does not come on, call your fireplace technician.

Proflame 2 Remote Control

Remote-Flame Control

The proflame has six (6) flame levels. With the system on, and the flame level at the maximum in the appliance, pressing the Down Arrow Key once will reduce the flame height by one step until the flame is turned off.
The Up Arrow Key will increase the flame height each time it is pressed. If the Up Arrow Key is pressed while the system is on but the flame is off, the flame will come on in the high position. (Fig. 7 & 8) A single "beep" will confirm reception of the command.

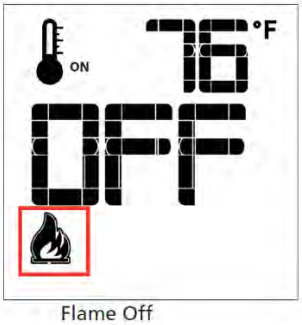

Fig. 7: Flame Off

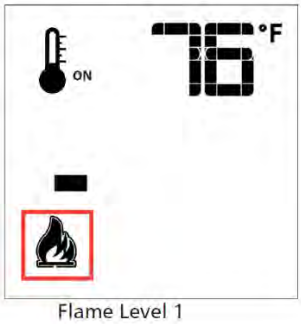

Flame Level 1

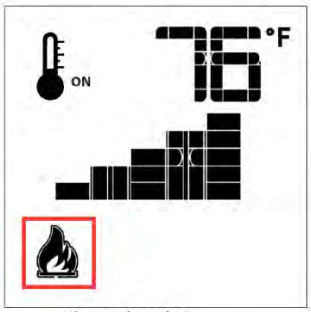

Fig. 8: Flame level 5



Flame Level Maximum

Room Thermostat (Transmitter Operation)

The Remote Control can operate as a room thermostat. The thermostat can be set to a desired temperature to control the comfort level in a room.
To activate this function, press the Thermostat Key (Fig. 1). The LCD display on the Transmitter will change to show that the room thermostat is "ON" and the set temperature is now displayed (Fig. 9). To adjust the set temperature, press the Up or Down Arrow Keys until the desired set temperature is displayed on the LCD screen of the Transmitter.

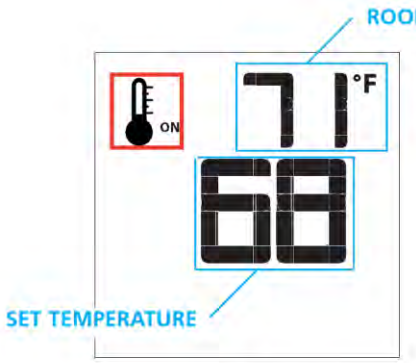

Fig. 9



Fig. 10

Smart Thermostat (Transmitter Operation)

The Smart Thermostat function adjusts the flame height in accordance to the difference between the set point temperature and the actual room temperatures. As the room temperature gets closer to the set point the Smart Function will modulate the flame down.
To activate this function, press the Thermostat Key (Fig. 1) until the word "SMART" appears to the right of the temperature bulb graphic (Fig. 11).
To adjust the set temperature, press the Up or Down Arrow Keys until the desidered set temperature is displayed on the LCD screen of the Transmitter (Fig. 12).



Fig. 11: Smart flame function



Fig. 12

Note:
When Smart Thermostat is activated, manual flame height adjustment is disabled.

Fan Speed Control

If the appliance is equipped with a hot air circulating fan, the speed of the fan can be controlled by the Proflame system. The fan speed can be adjusted through six (6) speeds. To activate this function use the Mode Key (fig.1) to index to the fan control icon (Fig. 13). Use the Up/Down Arrow Keys (Fig.1) to turn on, off or adjust the fan speed (fig. 14). A single “beep” will confirm reception of the command.



Fig. 13

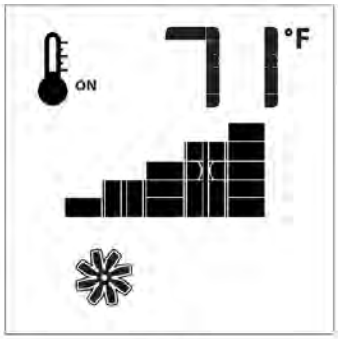

Fig. 14

Remote dimmer control (Light)

The auxiliary function controls the AUX power outlet by the dimmable light control. To activate this function use the Mode Key (fig. 1) to index to the AUX icon (fig. 15 & 16).
The intensity of the output can be adjusted through six (6) levels. Use the Up/Down Arrow Keys (Fig.1) adjust the output level (fig. 16). A single “beep” will confirm reception of the command.

Note:
This function is only available in Room Thermostat or Smart Thermostat Control Mode.



Fig. 15

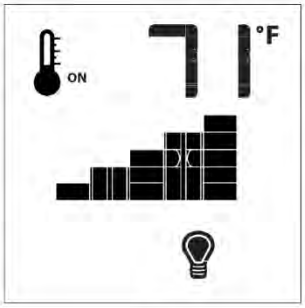

Fig. 16

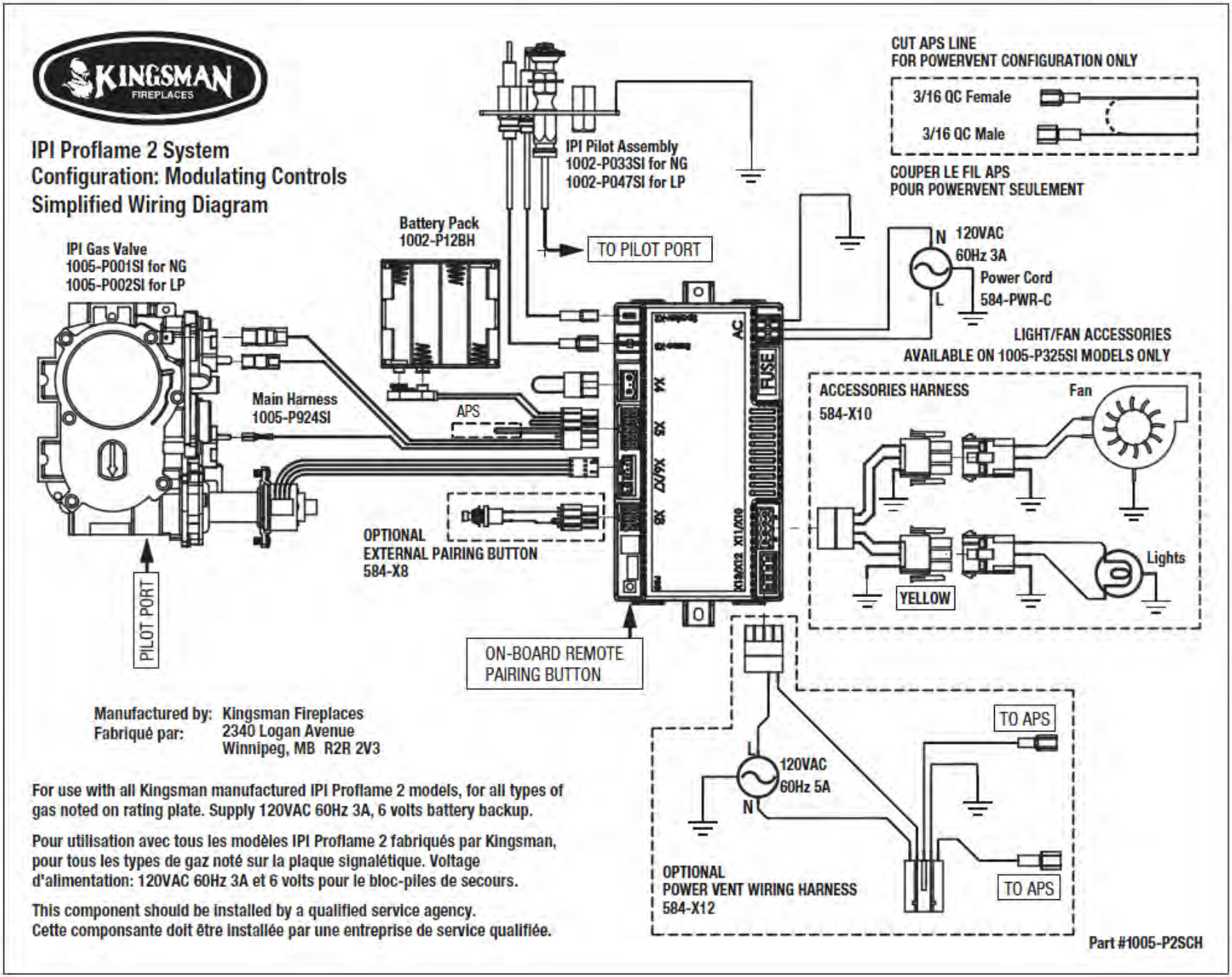

Manufactured by: Kingsman Fireplaces
Fabriqué par: 2340 Logan Avenue
Winnipeg, MB R2R 2V3

For use with all Kingsman manufactured IPI Proflame 2 models, for all types of gas noted on rating plate. Supply 120VAC 60Hz 3A, 6 volts battery backup.

Pour utilisation avec tous les modèles IPI Proflame 2 fabriqués par Kingsman, pour tous les types de gaz noté sur la plaque signalétique. Voltage d'alimentation: 120VAC 60Hz 3A et 6 volts pour le bloc-piles de secours.

This component should be installed by a qualified service agency.
Cette componsante doit être installée par une entreprise de service qualifiée.

WMBH – Wall Mount Battery Holder – Proflame 1 and 2 IPI Models - Option

The WMBH provides the option for a more convenient and accessible location for the backup batteries.
NOTE: The WMBH is **NOT** a remote control receiver. It functions as a Battery Holder and mode selector switch **ONLY**.

⚠ CAUTION- DO NOT PLUG THE ORIGINAL BATTERY HOLDER SUPPLIED WITH THE APPLIANCE INTO THE WMBH WIRING HARNESS. - NOT FOR USE WITH POWER VENTS -

Parts List:
[1] Battery Holder
[1] DCHS Mount Bracket
[1] Wall Mount Cover Plate
[1] 16 ft. Wiring Harness

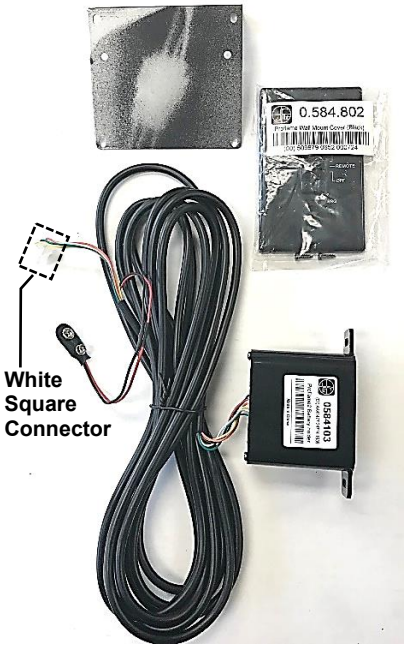

Installation:

- The Battery Holder can be mounted on a vertical wall stud using the DCHS as a mounting bracket.
- Ensure that the face is protruding 1/2” so that the face plate will be flush on the face of the wall.
- Drywall cutout size is 2” wide by 4-1/8” tall.
- Must be installed within 16ft of valve assembly (12ft recommended).

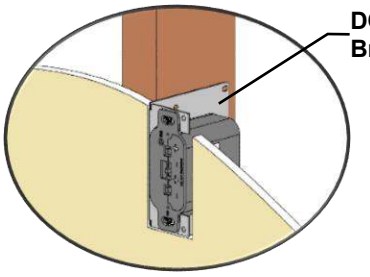



Operating Instructions:

- **Proflame 1:** Set the switch on the Battery Holder to either the **ON** or **REMOTE** position. The WMBH functions as a battery backup should a power outage occur.
- **Proflame 2:** Set the switch on the Battery Holder to the **REMOTE** position. **NOTE:** If the switch on the Battery Holder is set to **ON**, the remote control will be disabled. The WMBH functions as a battery backup should a power outage occur. Refer to the manual that accompanies the Battery Holder for further instructions.

Proflame 1:
-Plug **Battery Connector** into **Battery Holder** connection on wiring harness.

-The **Square Plug Connector** on the 16ft wiring harness is not used.

Proflame 2:
-Plug the **Square Plug Connector** into the **User Interface Socket** in the P2 Module.
-Plug the **Battery Connector** into **Battery Holder** connection on the Proflame 2 wiring harness.

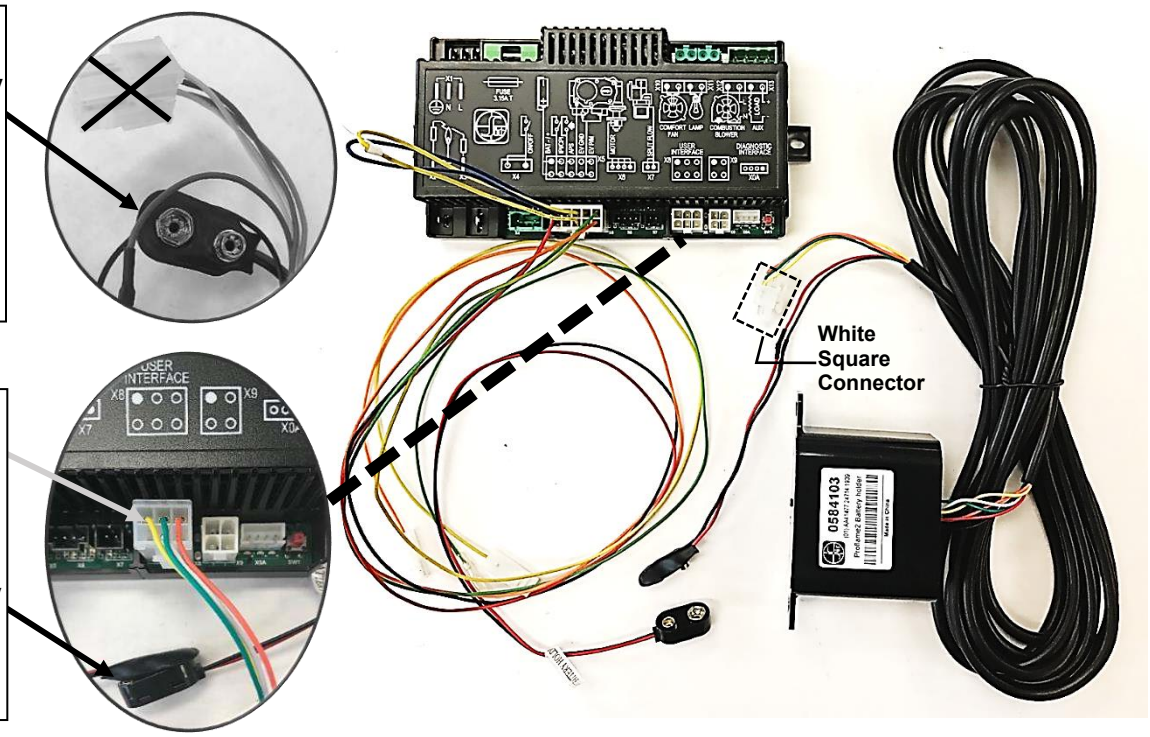

Vent Terminal Clearances

NOTE: A HORIZONTAL VENT CERTIFIED GUARD (SAFETY CAGE) IS AVAILABLE WHEN REQUIRED BY LOCAL CODES.

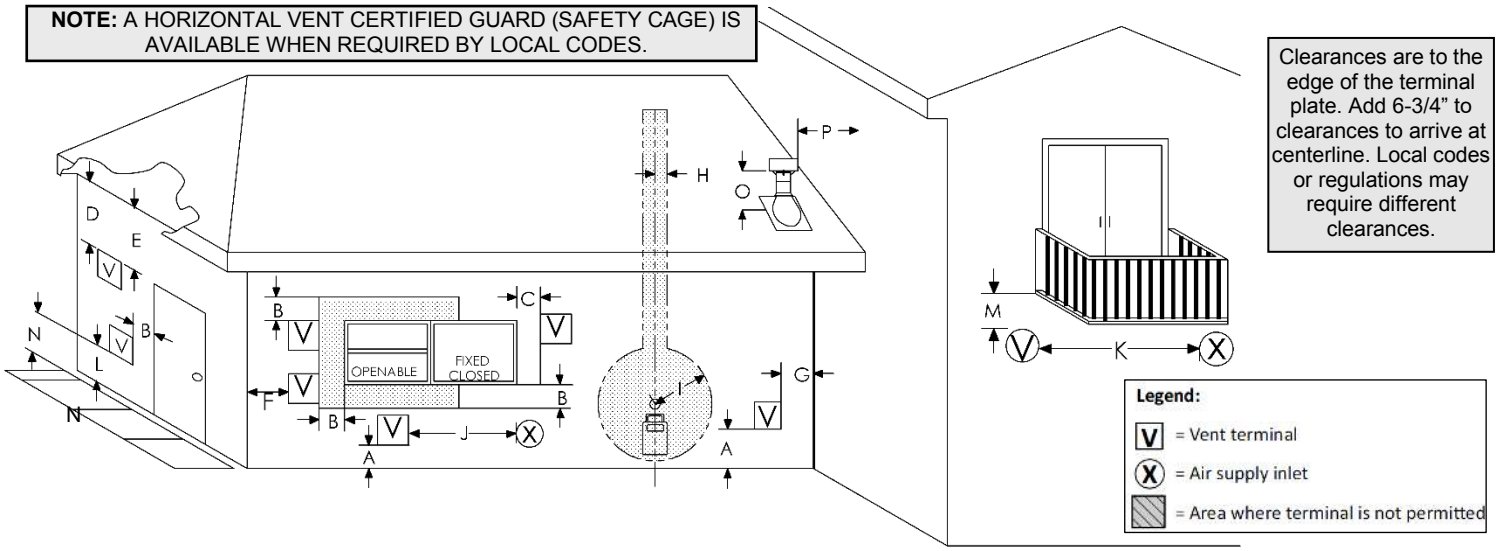

Clearances are to the edge of the terminal plate. Add 6-3/4" to clearances to arrive at centerline. Local codes or regulations may require different clearances.

		Canadian installations[1]	US installations[2]
A	Clearance above grade, veranda, porch, deck, or balcony	12 in (30 cm)	12 in (30 cm)
B	Clearance to window or door that may be opened	6 in (15 cm) for appliances ≤ 10,000 Btu/h (3 kW), 12 in (30 cm) for appliances > 10,000 Btu/h (3 kW) and ≤ 100,000 Btu/h (30 kW), 36 in (91 cm) for appliances > 100,000 Btu/h (30 kW)	6 in (15 cm) for appliances ≤ 10,000 Btu/h (3 kW), 9 in (23 cm) for appliances > 10,000 Btu/h (3 kW) and ≤ 50,000 Btu/h (15 kW), 12 in (30 cm) for appliances > 50,000 Btu/h (15 kW)
C	Clearance to permanently closed window	12 inches (30cm) recommended to prevent condensation on window	12 inches (30cm). 9 inches (23cm) for appliances 50,000 Btu's and lower
D	Vertical clearance to ventilated soffit located above the terminal within a horizontal distance of 2 feet (61 cm) from the center line of the terminal	18 inches (46cm)	18 inches (46cm)
E	Clearance to unventilated soffit	12 inches (30cm)	12 inches (30cm)
F	Clearance to outside corner	3" *	3" *
G	Clearance to inside corner	3" *	3" *
H	Clearance to each side of center line extended above meter/regulator assembly	3 ft (91 cm) within a height 15 ft (4.5 m) above the meter/regulator assembly	3 ft (91 cm) within a height 15 ft (4.5 m) above the meter/regulator assembly
I	Clearance to service regulator vent outlet	3 ft (91 cm)	3 ft (91 cm)*
J	Clearance to non-mechanical air supply inlet to building or the combustion air inlet to any other appliance	6 in (15 cm) for appliances ≤ 10,000 Btu/h (3 kW), 12 in (30 cm) for appliances > 10,000 Btu/h (3 kW) and ≤ 100,000 Btu/h (30 kW), 36 in (91 cm) for appliances > 100,000 Btu/h (30 kW)	6 in (15 cm) for appliances ≤ 10,000 Btu/h (3 kW), 9 in (23 cm) for appliances > 10,000 Btu/h (3 kW) and ≤ 50,000 Btu/h (15 kW), 12 in (30 cm) for appliances > 50,000 Btu/h (15 kW)
K	Clearance to a mechanical air supply inlet	6 ft (1.83 m)	3 ft (91 cm) above if within 10 ft (3 m) horizontally
L	Clearance above paved sidewalk or paved driveway located on public property	7 ft (2.13 m)	*(Notes: 2)
M	Clearance under veranda, porch deck, or balcony	12 in (30 cm)‡	12 in (30 cm) *
N	Where a vent termination may cause hazardous frost or ice accumulations on adjacent property surfaces	**(Notes: 1)	*(Notes: 2)
O	Clearance above highest point of exit on roof	18 in (45cm)	18 in (45cm)
P	Clearance to perpendicular or adjacent wall	24 in (60cm)	24 in (60cm)

Notes:

1) In accordance with the current CSA B149.1, Natural Gas and Propane Installation Code.

2) In accordance with the current ANSI Z223.1/NFPA 54, National Fuel Gas Code.

***** Clearance in accordance with local installation codes and the requirements of the gas supplier.

****** A vent shall not terminate directly above a paved sidewalk or paved driveway that is located between two single family dwellings and serves both dwellings. Note: This does not apply to non-condensing appliances (Province of Ontario ONLY).

‡ Permitted only if veranda, porch, deck, or balcony is fully open on a minimum of two sides beneath the floor.

It is imperative that the vent termination be located observing the minimum clearances as shown. There must not be any obstruction such as bushes, garden sheds, fences, decks or utility buildings within 24" from the front of the termination plate.

Do not locate termination where excessive snow or ice build-up may occur. Be sure to check vent termination area after snow falls and clear to prevent accidental blockage of venting system. When using snow blowers, make sure snow is not directed towards vent termination area.

Venting terminal shall not be recessed into a wall or siding. If finishing the outside wall with vinyl or wood siding it is **required** that a Siding Shield be installed, Part Number ZDVSSLR.

General Vent Installation Information

⚠ **WARNING:** DO NOT mix parts from different systems unless stated in the manual.

This gas appliance is approved to be vented either through the side wall or vertically through the roof. Only Kingsman Flex (Z-Flex) Venting Kits and components specifically approved and LABELED for this appliance may be used. This appliance is also approved for use with MG-Duravent Direct Vent system (DirectVent Pro and DirectVent Pro Concentric Flex), BDM Pro Form Direct Vent, Ameri-Vent Direct Vent Pipe System, ICC Excel Direct, Metal Fab Sure-Seal DV and Selkirk Direct Temp.

Rigid or Hard Pipe

When using MG Duravent, Ameri-Vent pipe, BDM Pro Form Direct Vent, ICC Excel Direct, Metal Fab Sure-Seal DV and or Selkirk Direct Temp a Duravent hard pipe adapter must be used (part # ZDVDFA for fireplaces, and part # ZDVDKA for Stoves and Serene Series). Follow installation instructions provided by MG Duravent/Ameri-Vent/Selkirk Direct Temp, ICC Excel Direct, and Metal Fab Sure-Seal DV for installation of pipe and adhere to the clearance to combustibles provided in this manual.

Apply a bead of Mill Pac high temp sealant at the flue of the appliance when using a Duravent adapter.

NOTE: It is critical to the proper and safe operation of this fireplace that on all connections the inner liner and the outer casing are both caulked with liberal amounts of sealant. Do not use any kind of tape or silicone other than that recommended in this manual. Use Mill Pac Sealant.

NOTE: These actions are essential for proper resealing or reinstallation of the vent-air intake system.

REMEMBER THAT A 1/4" VERTICAL RISE IS REQUIRED FOR EVERY 12" OF HORIZONTAL RUN.

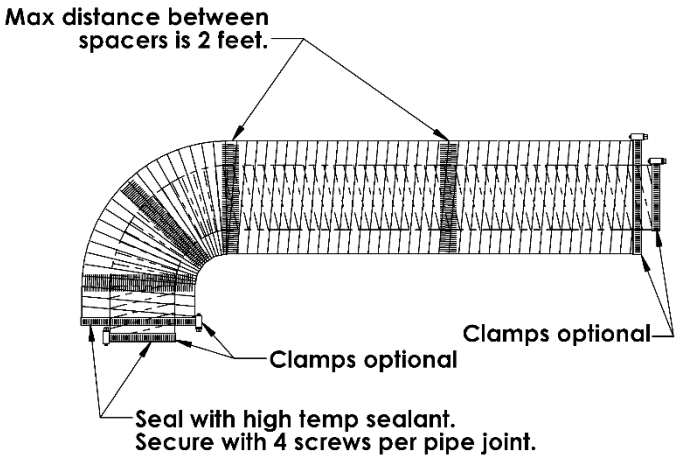

Flex Pipe Venting

Kingsman Flex pipe is shipped in unexpanded length. When installing pipe expand the lengths. Pipe can be expanded to twice their lengths e.g., 4ft. to 8ft. Fully expand pipe and cut off excess. Do not use more than 2 couplers to extend short pipes. Single sections are preferred in an installation attaching at the fireplace and termination.

Place the spring spaces provided approximately every two feet to stabilize 4" flex in the center of 7" flex. When forming bends place spring in bend or before and after. (See Fig. 1). Horizontal runs require support metal straps every 2 feet. In offset installation support straps should be used to stabilize pipe.

Expand 4" and 7" flex pipe to the point that the 7" protrudes approximately 2 to 3 inches past outer wall and the 4" flex protrudes approximately 2 to 3 inches past the 7" flex. (See Fig. 1). Attach the 4" pipe to the termination first and secure with sealant and screws then attach the 7" flex to the termination with caulking and screws. Termination may then be moved back to the outer wall and attached to home screwing into the framing. Silicone around termination to waterproof. If siding shield is going to be used attach this using same attaching hole as the top of termination after termination has been caulked for water proofing.

Use Hi Temp Sealant

Apply a bead of Mill Pac high temp sealant to all joints and use four screws to secure each pipe at fireplace, termination and any joint if joining any sections of pipe.

Preventing Moisture Problems

Insulate wall thimbles and attic insulation shields for vertical attic terminations with non-combustible mineral wool Insulation (Roxul, Rockwool, Thermafiber UltraBatt, etc.). Attach and seal the outer perimeter of the wall thimble or attic insulation shield to the existing vapor barrier.

FDVHT Termination

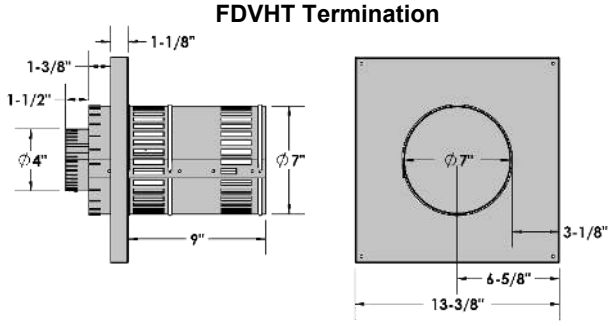

FDVHSQ Termination

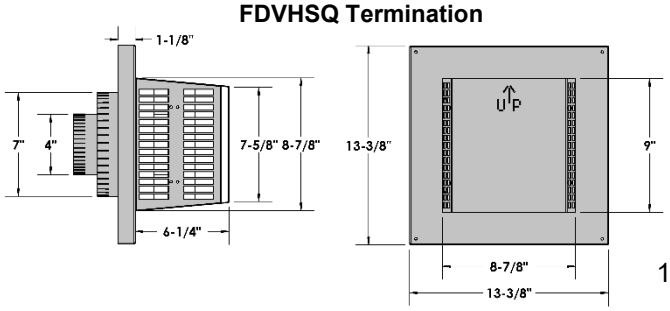

Installation of Side Wall Venting

1. To determine the minimum distance from the bottom of fireplace to center of vent see the Framing Your Gas Fireplace section. Cut a hole through the wall allowing for an 11” x 11” (inside diameter) in combustible walls for wall thimble or an 8” diameter hole in a non-combustible wall (See Figure 2).
2. For the clearance to combustible above a 90-degree bend see Clearance to Combustibles section.
3. Select the approximate vent length, precise measurements are not needed as your flex pipe can be expanded to twice its shipped length for ease of installation.
4. To install wall thimble center over 11” x 11” (inch) framing from both sides of wall and secure. Route flex vent pipe through wall thimble (See Figure 1).
5. Before joining pipes, apply a bead of high temperature sealant (Mill Pac) to end of pipe. First attach the four-inch (4”) flue pipe to the vent termination with sealant, and secure with the four screws provided. At this time make sure the spacer springs are attached to the (4”) flex pipe as required. Then attach the seven-inch (7”) pipe by the same method.
6. Mount vent termination and seal to wall using caulking around the wall thimble to weather proof. After installing the vent termination, double check to make sure the pipe extends properly through wall thimble and into vent termination.
7. Before joining pipes to fireplace flue, apply a bead of high temperature sealant (Mill Pac) to end of pipe. First attach the four-inch (4”) flue pipe to fireplace with sealant, and secure with the four screws provided. At this time verify that the spacer springs are attached properly to the (4”) flex pipe as required. Then attach the seven-inch (7”) pipe by the same method.
8. Support horizontal pipes every two (2) feet (61 cm) with metal strap bands. Re-check fireplace to make sure it is levelled and properly positioned and secured.
9. Support vertical pipes to maintain a minimum of 1” or greater clearance to combustibles with metal strapping bands.
10. If finishing the outside wall with vinyl or wood siding it is **required** that a Siding Shield be installed, Part Number ZDVSSLR.

Note: Vent Termination must not be recessed into wall or siding.

WARNING: A HORIZONTAL VENT CERTIFIED GUARD (SAFETY CAGE) IS AVAILABLE WHEN REQUIRED BY LOCAL CODES.

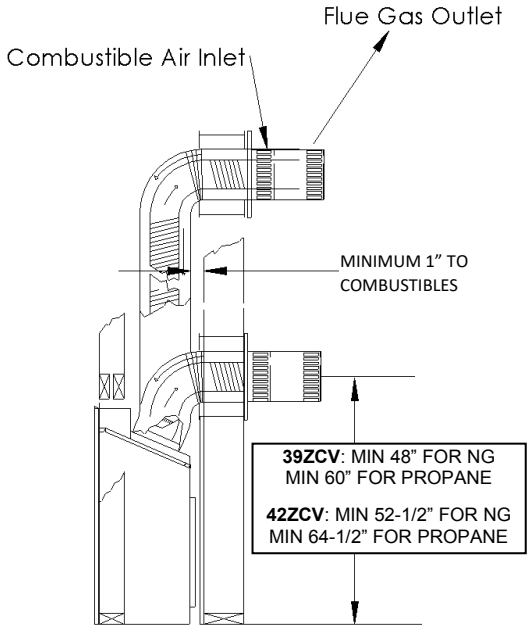

Figure 1

FRAMING DIMENSION
Combustible Wall
Cut an 11” hole through exterior wall and frame as shown.
Non-Combustible Wall
Cut or drill 8” or 204mm diameter hole.

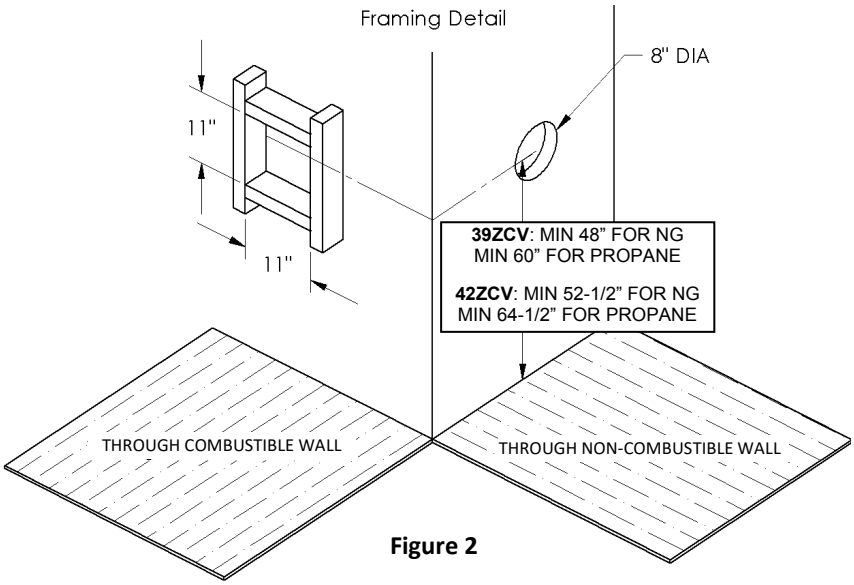

Figure 2

39ZCV & 42ZCV - Venting Routes And Components

Venting Routes and Components

Since it is very important that the vent system maintain its balance between the combustion air intake and the flue gas exhaust, certain limitations as to vent configurations apply and must be strictly adhered to.

The table showing the relationship between vertical and horizontal side wall venting will help to determine the various vent lengths.

The maximum horizontal run is 20 ft/6.1 m when the vertical run is 7 ft/2.1m (Figure #2). **Note: 1/4" vertical rise is required for every 12" of horizontal run.**

The maximum number of 45-degree bends per side wall installation is two (2) in the horizontal run and then you must reduce the length of the horizontal by 18 inches for each 45-degree bend.

The maximum vertical run is 43 ft./13.1meters.

Special Note: For each 45-degree bend installed in the horizontal run, the length of the horizontal run must be reduced by 18" (45cm). This does not apply if the 45-degree bends are installed on the vertical part of the vent system.

Example: If according to the table, the length of the horizontal run is 10 feet, and two 45-degree bends are required, the horizontal run length must be reduced to 7 feet.

2 additional 90° bends or equals are allowed. The horizontal run must be reduced by 36" per each 90° bend, or 18" per each 45° bend.

IMPORTANT: Always locate the fireplace in such a way that a minimum of offsets and/or horizontal runs are required. 1/4" vertical rise is required for every 12" horizontal run.

Figure 1

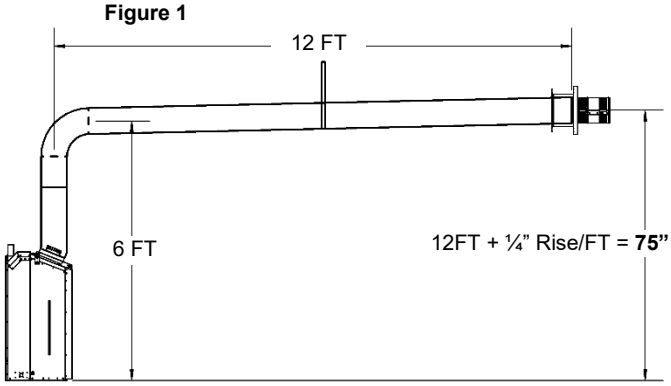

Figure 2

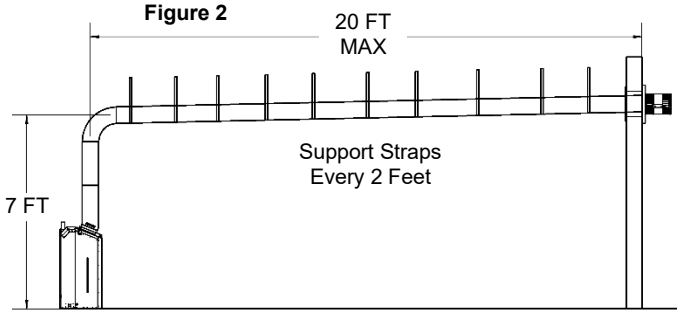

How to Use the Horizontal Vent Table

1. Determine the height of the system and the number of bends required.
2. Having determined the vertical distance determine the maximum horizontal section allowed.
3. Vent table has been established for 90˚ horizontal/vertical runs. With use of flex pipe distance not having 90˚ bends will not fall into vent table standards. See Fig. B.

-Horizontal Venting Table from Bottom of Fireplace-

For venting to a maximum of 43ft (13.1 meters).

Total Vertical		Max Total Horizontal	
Feet	Meters	Feet	Meters
48" (ZCV39N)	1.2	5	1.5
52-1/2" (ZCV42N)	1.3	5	1.5
*60" (ZCV39LP)	1.5	8	2.4
*64-1/2" (ZCV42LP)	1.6	8	2.4
6	1.8	12	3.7
7	2.1	20	6.1
8	2.4	20	6.1
9	1.8	20	6.1
10	3.0	20	6.1
11	3.4	20	6.1
12	3.7	20	6.1
13	4.0	20	6.1
14	4.3	20	6.1
15	4.6	20	6.1
20	6.1	20	6.1
25	7.6	15	4.6
30	9.1	10	3.0
43 (Max)	13.1	0	0

Example A:

If the vertical dimension from the floor of the fire- place is 6ft, the horizontal run to the wall flange of the vent termination must not exceed 12ft.

NOTE: The final location of the fireplace must be such that the horizontal vent dimensions fall within those stated on the graph. The Maximum Vertical vent run is 43ft. (13.1 meters).

Important: Minimum clearance between vent pipes and combustible materials is1 inch (25mm).

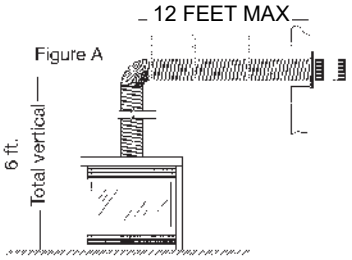

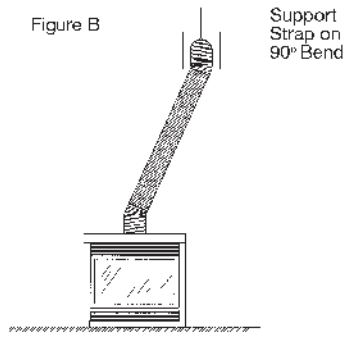

*For Propane Horizontal installations the venting must be an additional one foot above the minimum vertical rise off the flue before going horizontal.

Z47ST24 / Z47ST36 Horizontal Snorkel Terminations

Two snorkel terminations are available if a vertical rise is necessary on the exterior side of a building:

Z47ST24 (24” Tall, 14-1/2” Center to Center) **Z47ST36** (36” Tall, 26-1/2” Center to Center)

Follow standard horizontal venting installation procedures. If the Snorkel Termination is to be located below grade, a window well is recommended with adequate and proper drainage as per local codes. Leave 2” clearance below snorkel to prevent water from entering the Snorkel Termination. Do not enclose the Snorkel within a wall or other type of enclosure and **do not back fill**. Ensure that grade level slopes away from the building. Follow all local codes.

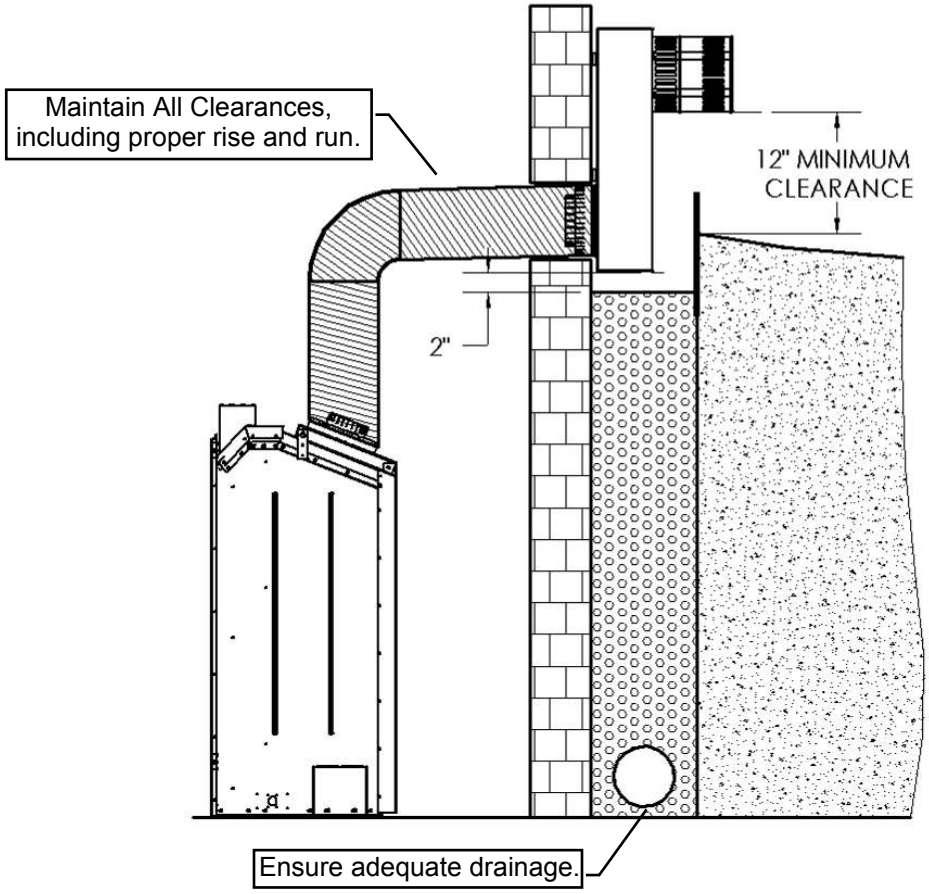

-FOLLOW ALL LOCAL CODES-

- A safety cage (Z57STSC) is also available.

Place safety cage over snorkel and mount with [4] DT screws (supplied with safety cage).

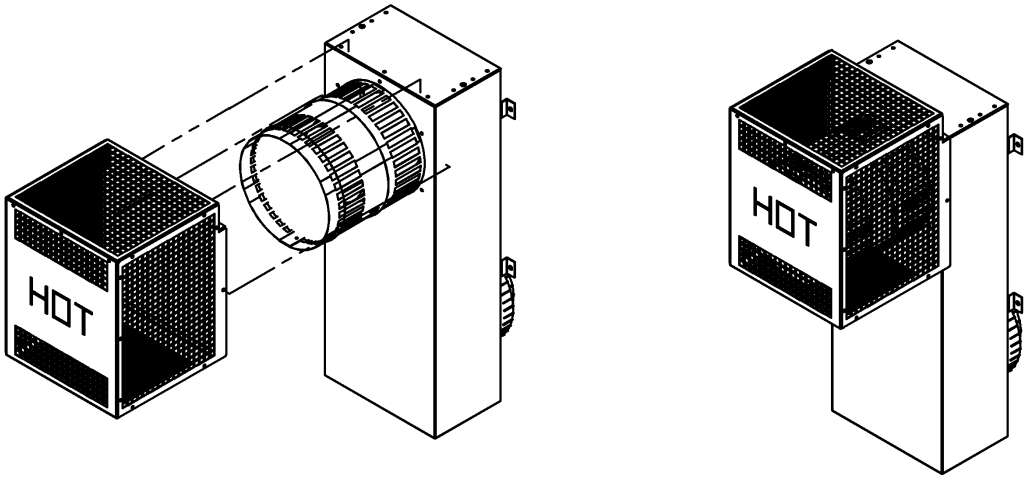

Venting Straight Up Through Roof

An Attic Insulation Shield must be installed where the vent passes from a lower living space into an attic space where the chimney is not enclosed. It is designed to keep insulation materials away from the chimney.
When installing the Attic Insulation Shield where the chimney passes from a living space to an attic space, install the shield from below and nail in place using 1" spiral nails.
A fire stop must be installed on the bottom side of the joists when passing through a ceiling or floor. If an attic insulation shield is to be used, a fire stop is not required.

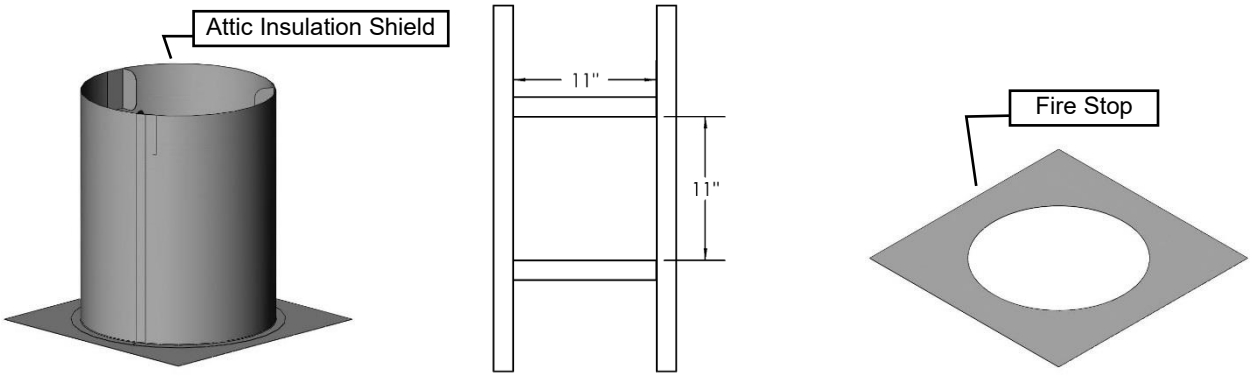

Using Flex Bends

Avoid cutting joists by offsetting the flex pipe.
When using 45° bends a bend support is required directly above the highest bend.
When installing a bend in a joist area a minimum of 4" clearance to combustible to the top of bend must be maintained, sides and bottom of pipe, a 1" clearance to combustibles must be maintained. If running horizontal through an area a 1-1/2" minimum clearance to the top of the horizontal pipe must be maintained.
Maximum vertical height of system should not exceed 43 feet.
Use roof support and rigid pipe at roof level. Flex pipe is not permitted within roof support.
When penetrating the roof a rigid galvanized pipe must be used. Attach flex pipe to the rigid pipe with high temperature sealant, secure with four screws assuring the flex pipe and rigid pipe are secured. Attach rigid pipe to termination with sealant and screw with 4 sheet metal screws. The Inner flex pipe must be secured with 4 screws which must penetrate both the flex pipe and inner section of termination. Attach 7” rigid pipe to 7” termination with sealant and screw with 4 sheet metal screws.
Vertical termination clearance is 18" [45.7cm] above the roof, measured from highest point of exit on the roof line.
Support vertical pipes to maintain minimum of one inch or greater clearances to combustibles.

Roof Flashing

Ensure that you have the proper roof flashing by checking your roof pitch using a level and two rulers, or by using a roof pitch card. Slide a Roof Flashing suitable to your roof slope over the vent. Place the edge of the flashing plate that will be on the higher part of the roof slope under the shingles. Both the sides and the lower edge lay on top of the shingles.

NOTE: At the top edge of the flashing plate, lift the shingles and nail the plate to the roof deck, then cement the shingles to the plate with a suitable waterproof mastic.

Ensure that the chimney is plumb. Square up the flashing plate and nail in place to the roof deck. Use 12 nails with neoprene washers or cover the heads with a suitable waterproof mastic. Wrap the storm collar around the vent above the flashing. Secure the ends together loosely with nut and bolt supplied. Slide the collar down the vent until it comes in contact with the flashing. Tighten the bolt and seal the Storm Collar to the vent with a suitable waterproof non-combustible mastic.
The flashing and storm collar should be painted to match the roof shingles. This will extend its life and improve the appearance. Clean, prime and paint with suitable painting products.

Vertical Venting in Cold Climates

In cold climate conditions where temperatures go below -10 degrees Celsius or 14 degrees Fahrenheit, we recommend that the chase be insulated and where the vent pipe enters into the attic space that the pipe be wrapped with an insulated Mylar sleeve. This will increase the temperature of the vent and help the appliance to vent properly in cold weather conditions.
It is also important in vertical vented direct vent appliances that the appliance be operated daily during the winter months as this will help stop the termination from freezing up.

We recommend using a thermostat set at room temperature to allow the unit to cycle.
For IPI models it may be necessary to set the appliance to Standing Pilot mode to maintain heat in the cavity. The purpose of this procedure is to prevent cold air from penetrating the chimney and then onto the living space. Therefore, when the internal temperature is slightly elevated the fireplace is able to freely exhaust its combustion and hence making it easier to start up.

-ALSO SEE DIAGRAMS ON FOLLOWING PAGE-

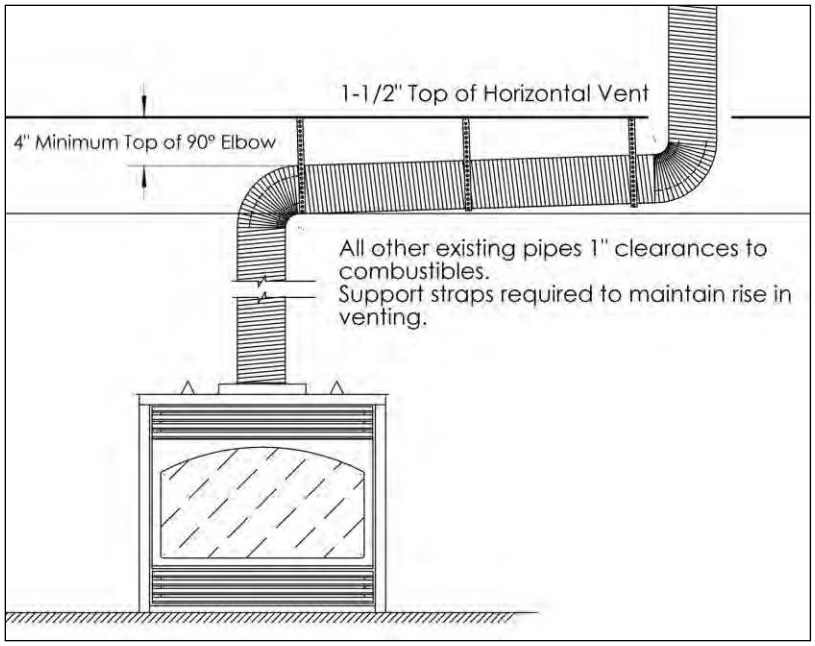

Clearances in horizontal venting.

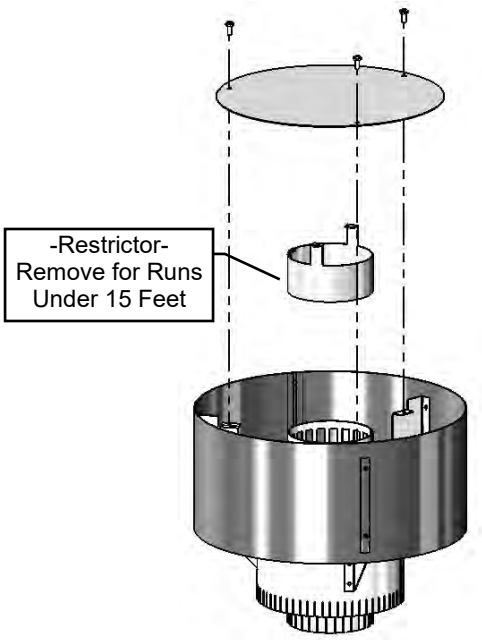

FDVVT40

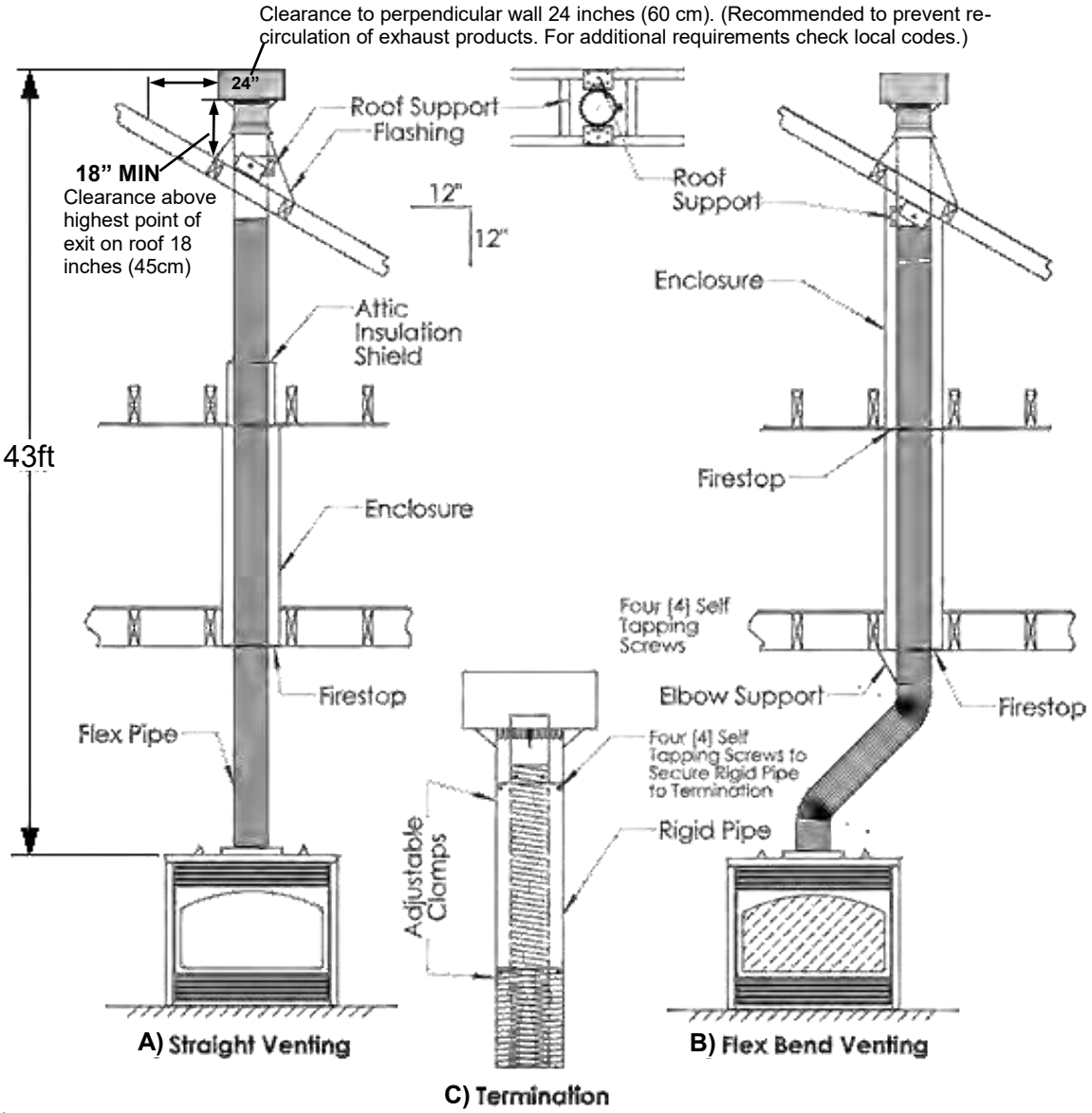

A) Straight-through roof support configuration; **B)** Flex bend configuration; **C)** Termination mounting

ZCV39 / 42 / 48 Venting - Cathedral Ceiling

Just as with a normal ceiling, an **Attic Insulation Shield** must be installed where the fireplace vent passes from a lower living space into an attic space when installing a fireplace into a room with a cathedral ceiling. This will keep insulation and other combustibles away from the vent pipe. A ***Support Box*** must be built in order to install the Attic Insulation Shield correctly.

A **Fire Stop** must be installed on the bottom side of joists when passing through an uninsulated ceiling or floor.

WARNING: HEAT CANNOT BE DISCHARGED INTO THE WALLS, FLOOR, OR CEILING. Heat must exit through the required 2" opening at the top of the chase. **Use Hi Temp Sealant.**

Insulate Attic Insulation Shield with non-combustible mineral wool insulation, and attach and seal outer perimeter to the existing vapor barrier.

ZDVAIS or Z7AIS24 Attic Insulation Shield

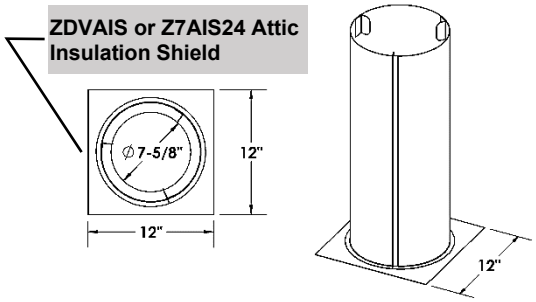

ZDVFS Firestop - Hole may need to be elongated to due to ceiling angle.

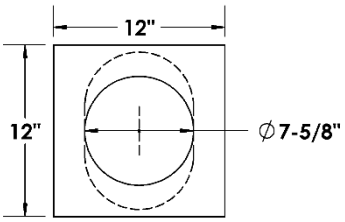

Option 1 - Angled Chase Opening

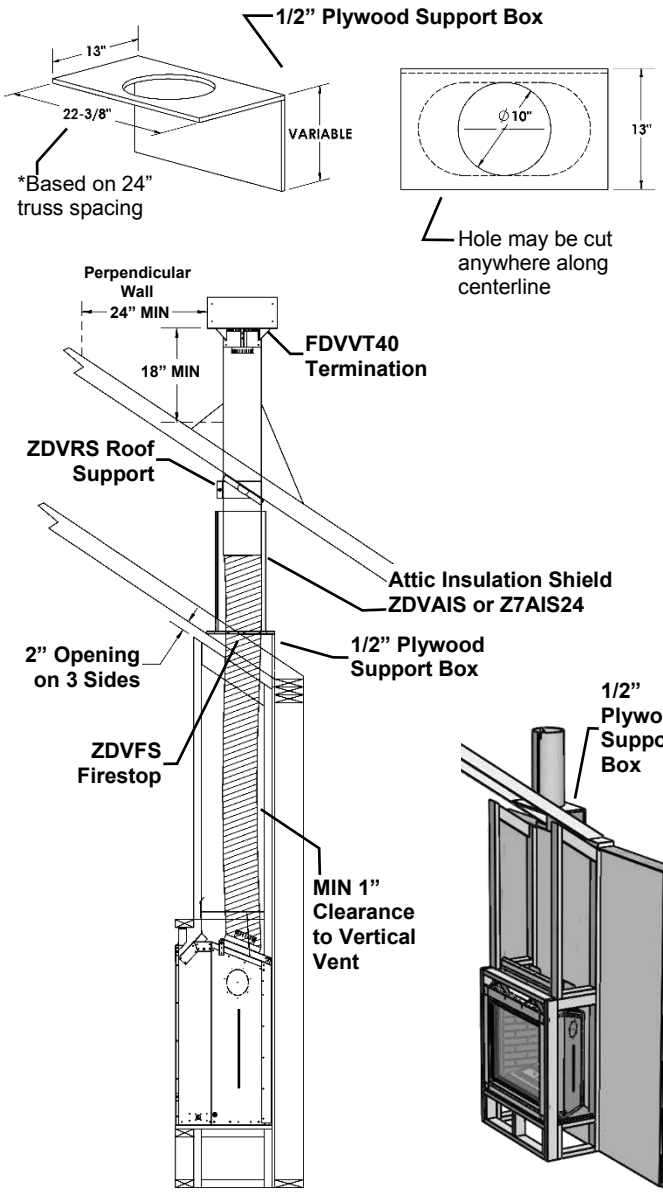

Option 2 - Horizontal Chase Opening

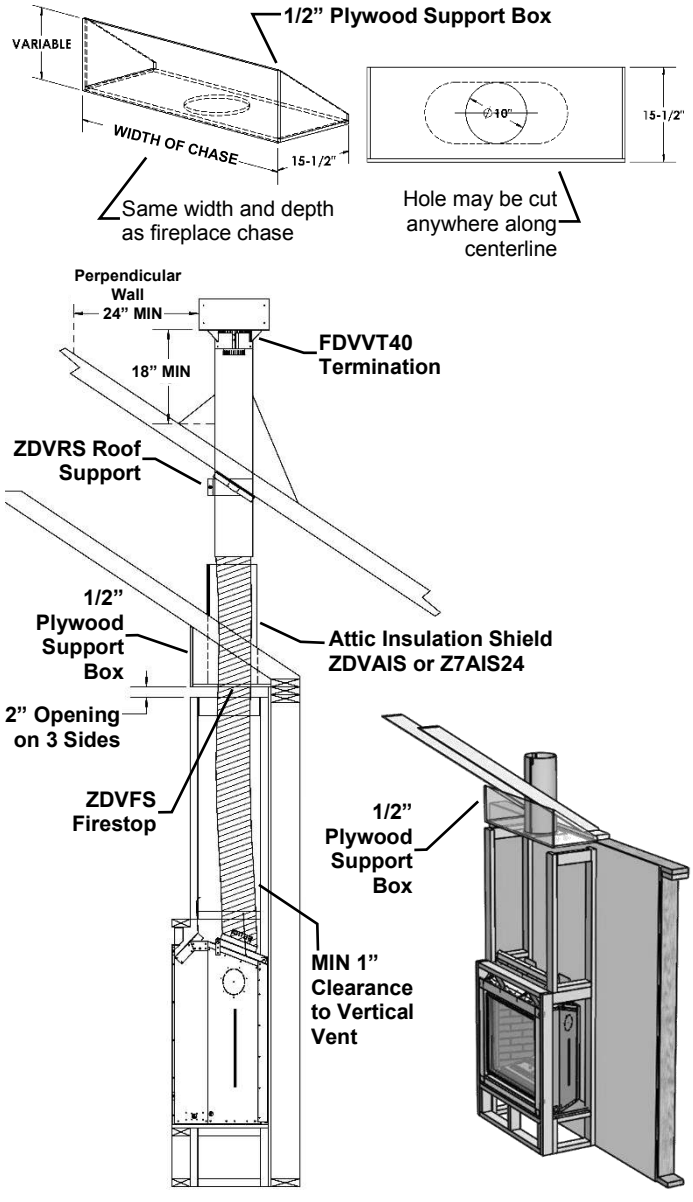

Fireplace Installations Using Co Linear Flex Kits for Units: ZCV39N, ZCV39NE, ZCV39NE2, ZCV39LP, ZCV39LPE, ZCV39LPE2, ZCV42N, ZCV42NE, ZCV42NE2, ZCV42LP, ZCV42LPE, ZCV42LPE2

⚠ WARNING CO-AXIAL TO CO-LINEAR VENTING CONFIGURATIONS MUST ONLY BE USED IN A NON-COMBUSTIBLE CHIMNEY OR ENCLOSURE. INSTALLATION IN A COMBUSTIBLE ENCLOSURE COULD RESULT IN A FIRE. MINIMUM VENT HEIGHT IS 12 FEET. MAXIMUM VENT HEIGHT IS 43 FEET.

Hard Pipe Adapter	Co Axial to Co Linear Appliance Connector Options	Size of Flex- 3x3 (Min 12ft / Max 43ft)	Termination Options
ZDVDFA	46DVA-CLAA 46DVA-GCL	IDVFK25 (25ft Kit) ZDV3FC (Flex Connectors)	IDVVT36 (Kingsman)- Requires IDVFK25 (25ft Flex Kit) 46DVA-CL33 High-Wind Termination (c/w35ft of Flex)



46DVA-CL33 HIGH WIND TERMINATION

BASEPLATE

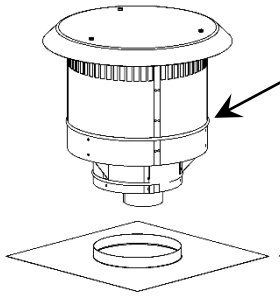

IDVVT36 KINGSMAN TERMINATION & BASEPLATE

BASEPLATE

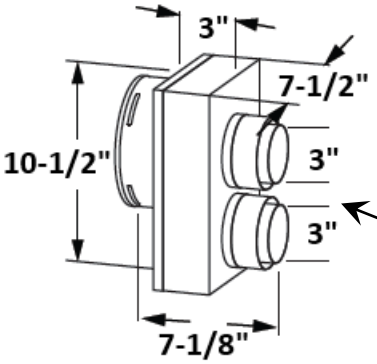

CO-AXIAL TO CO-LINEAR APPLIANCE CONNECTOR **46DVA-GCL**

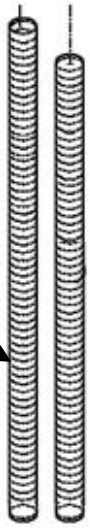

3x3 FLEX LINER

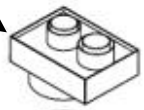

HARD PIPE ADAPTER **ZDVDFA**

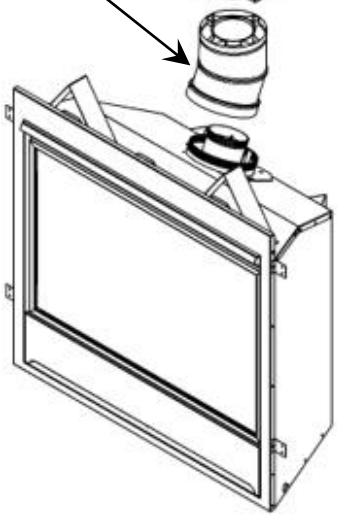

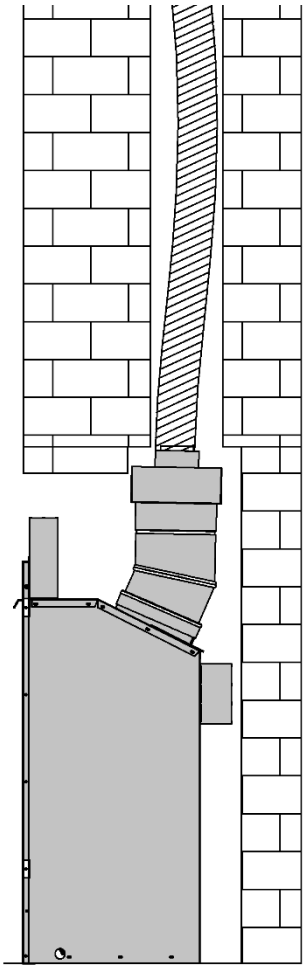

CO-AXIAL TO CO-LINEAR APPLIANCE CONNECTOR **46DVA-CLAA**

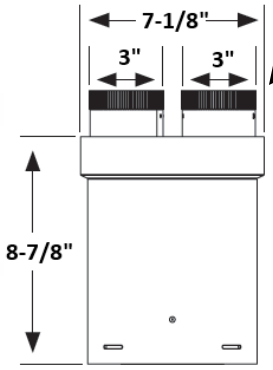

Approved for Power Vent PVH58 / PVH58FM

- This appliance is approved for use with a Kingsman PVH58 Horizontal Power Vent -

A Horizontal Power Vent Termination is intended for use where standard venting configurations are not possible.

NOTE: MODELS EQUIPPPED WITH MILLIVOLT/ STANDING PILOT IGNITION: Downward vertical vent runs are **NOT** permitted.

NOTE: MODELS EQUIPPPED WITH INTERMITTENT PILOT IGNITION (Proflame 1 or Proflame 2):
Downward vertical vent runs are permitted, however, Cold Climate Switch (Standing Pilot Mode) must **NOT** be used.

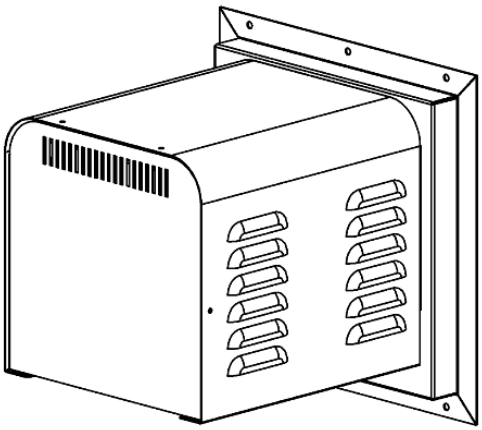

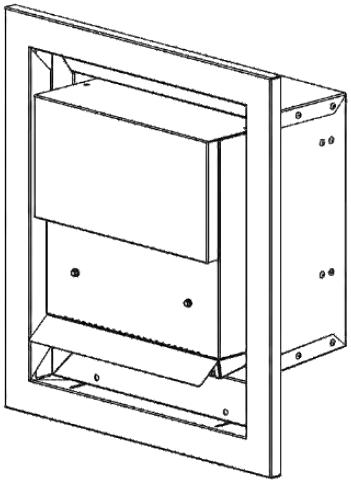

Maximum / Minimum Vent Lengths:

Maximum Vent Length is 125 ft plus six 90° elbows with Air Intake Shutter fully closed. Termination must not be below unit.

This power vent can be installed up to **8ft** below the installed fireplace on runs less than 100ft and not more than four 90° elbows.

Minimum Vent Length is 1 FT vertical x 3 FT horizontal x 3 FT vertical x 3 FT horizontal (See PVH58 manual).

Seven 90° elbows are possible if the total horizontal is not more than 25ft and the vertical does not exceed 15ft.

Refer to Power Vent Manual for proper installation and use.

marquis COLLECTION by Kingsman

KINGSMAN FIREPLACES Est. 1976

Bentley ZCV39 / ZCV42 Power Vent Control Module Installation

FIREPLACE IS SUPPLIED WITH ONE JUNCTION BOX.
ADDITIONAL OUTLETS MAY BE REQUIRED. CONSULT A QUALIFIED ELECTRICIAN.

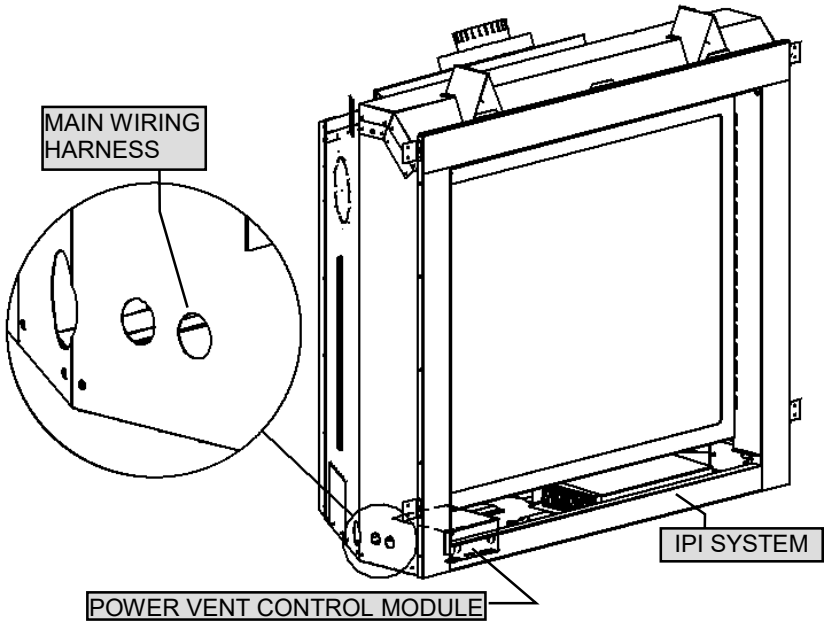

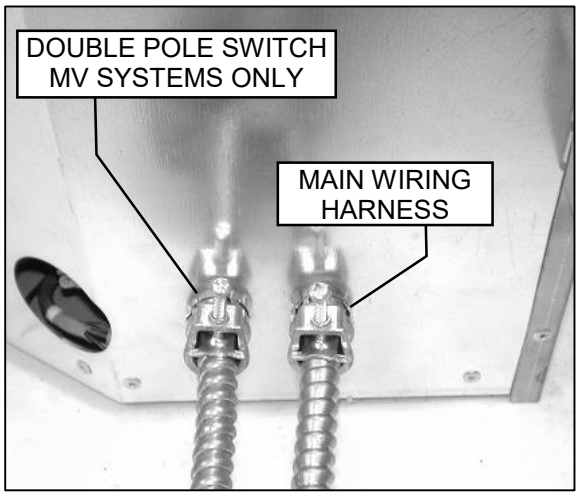

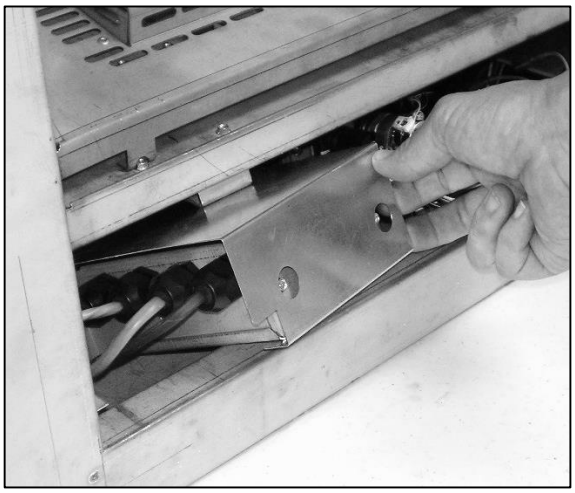

NOTE: Fireplace glass door must be removed to Install or remove Power Vent Control Module.

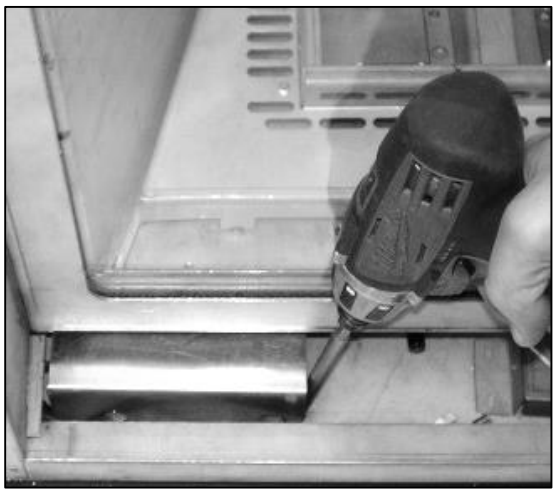

Power Vent Control Module Mounted inside fireplace.

FOLLOW EITHER MILLIVOLT OR IPI SYSTEM INSTRUCTIONS TO COMPLETE THE INSTALLATION.

PVH58 Power Vent Parts List for 4/7 Venting

POWER VENT PARTS LIST – 4/7 VENTING

NUMBER	DESCRIPTION
PVH58	Horizontal Power Vent Starter Kit - Exterior Mount
PVH58FM	Horizontal Power Vent Kit - Flush Mount

Note: Must use a one-foot section of 5/8 DV hard pipe to connect to the Power Vent Termination (not supplied)

CHOOSE CONTROL MODULE OR HARNESS DEPENDENT ON VALVE SYSTEM

PVC58MV	Power Vent Control Module - for Millivolt Models
PVC58IPI	Power Vent Control Module - for Proflame 1 - IPI Models
584-X12	Harness for Proflame 2 IPI - Deluxe Models
PVH20H	Main Wiring Harness Assembly – Extension Harness (20ft)

CHOOSE VENTING TO BE USED: SECTION 1 - HARD PIPE, SECTION 2 FLEX VENT

SECTION 1 DIRECT VENT HARD PIPE 4x6-5/8" – for entire installation

(Two Adapters needed: one at Flue and one at Termination)

	Flue of Fireplace
ZDVDKA	Duravent Adapter – for Flat Flue
ZDVDFA	Duravent Adapter – for Sloped Flue
	Termination End
ZDVDIA	Duravent Hard Pipe Adapter- (used to connect 4x6-/8" to 5/8 Hard Pipe)

Note: Must use a one-foot section of 5/8 DV hard pipe (not supplied) to connect to the Power Vent Termination.

SECTION 2 FLEX VENT - Used for entire installation – order Z47PVA

Note: Must use a one-foot section of 5/8 DV hard pipe connected to the power vent on all installations.

	Termination End
Z47PVA	Flex Pipe Adapter Kit - (to adapt flex pipe to power vent to hard pipe)

Note: Must use a one-foot section of 5/8 DV hard pipe (not supplied) to connect to the Power Vent Termination.

SECTION 3 DIRECT VENT HARD PIPE 3/5" - for entire installation

(Three Adapters needed two at Flue and one at Termination)

Flue of Fireplace - Choose appropriate adapter for 4x6-5/8"

ZDVDFA Duravent Fireplace Adapter 4x6-5/8 - Sloped Flue

ZDVDKA Duravent Stove Adapter 4x6-5/8" - Flat (Serene 47)

Convert from 4x6-5/8" to 3/5" MG HP

PVA4635 Duravent Adapter- 4x6-5/8 TO 3/5 - FLUE

Convert to Termination - 3/5" to 5/8"

PVA3558 Duravent Adapter for Power Vent Termination - 3/5" to 5/8"

Note: Must use a one-foot section of 5/8 DV hard pipe to connect to the Power Vent Termination (not supplied)

FLEX VENTING KITS

ZDVFK5	Flex Kit (4” & 7” Dia.) x 2.5’ (Unexpanded) 5’ Expanded
ZDVFK8	Flex Kit (4" & 7" Dia.) x 8' (c/w Springs, Screws, Mill Pac)
ZDVFK20	Flex Kit (4" & 7" Dia.) x 20' (c/w Springs, Screws, Mill Pac)

POWER VENT ACCESSORIES

ZDV4FC	Flex Connector 4” Diameter
ZDV7FC	Flex Connector 7” Diameter
ZDV4FCL	Flex Clamp 4"
ZDV7FCL	Flex Clamp 7"
ZDV4SS	Spring 4" Standoff Spacer
PVH58WT	Wall Thimble for Power Vent

ZCV39 Parts List

Part Number	Description
Fireplaces	
ZCV39N	(Millivolt) Fireplace Heater rated, NG, Tempered Glass, Safety Screen
ZCV39NH	(Millivolt) Fireplace Heater rated, NG, Ceramic Glass, Safety Screen
ZCV39NE	(IPI) Fireplace Heater Rated NG, Tempered Glass, Safety Screen
ZCV39NE2	(Proflame 2) Fireplace Heater Rated NG, Tempered Glass, Safety Screen, Fan, Remote Control
ZCV39NHE	(IPI) Fireplace Heater Rated NG, Ceramic Glass, Safety Screen
ZCV39NHE2	(Proflame 2) Fireplace Heater Rated NG, Ceramic Glass, Safety Screen, Fan, Remote Control
ZCV39LP	(Millivolt) Fireplace Heater Rated LP, Tempered Glass, Safety Screen
ZCV39LPH	(Millivolt) Fireplace Heater Rated LP, Ceramic Glass, Safety Screen
ZCV39LPE	(IPI) Fireplace Heater Rated LP, Tempered Glass, Safety Screen
ZCV39LPE2	(Proflame 2) Fireplace Heater Rated LP, Tempered Glass, Safety Screen, Fan, Remote Control
ZCV39LPHE	(IPI) Fireplace Heater Rated LP, Ceramic Glass, Safety Screen
ZCV39LPHE2	(Proflame 2) Fireplace Heater Rated LP, Ceramic Glass, Safety Screen, Fan, Remote Control
Wall Surrounds ZCV39	
ZCV39S1BL	Surround - Hearth Mount (40-5/8”W x 35”) Black
ZCV39S1PFBL	Surround – Wide Picture Frame (40-5/8”W x 37” x 4”) Black
ZCV39S2PFBL	Surround - Picture Frame (36-1/8”W x 32-1/2” x 1-5/8”) Black
ZCV-TLK	Tile Lip Kit
ZCV39 Options	
LOG F3	Log Set- 5 Pcs
VLBIT4	Log Bits - Large Four Piece Kit
VLBIT6	Log Bits - Small Six Piece Kit
ZCV39GT	Glass Tray- Requires 15LBS Glass
39ZCV-258	Pilot Shield - for ZCV39GT
ZG5C	Decorative Ember Glass –Bronze 5LB
RBCB1	Cannonballs- Assorted size and colors
ULK2	Universal Light Kit
3927ZDV-P779-1	Bulb 10W 12V 64418 or [Sylvania 58691] (light bulbs NOT covered under Warranty.)
5143-P77912	Lamp Assembly 58mm (light bulbs NOT covered under Warranty.)
3927ZDV-P601	Transformer MET60-1
ZCV39 Options – MQ Dealer Only -	
MQ39DD1BL	Heavy Iron Door (38”W x 34-3/8”) Black
MQ39DD2BL	Heavy Iron Door (38”W x 34-3/8”) Black
MQ39DD3BL	Heavy Iron Door (38”W x 34-3/8”) Black
MQ42D	Driftwood Log Set- 6pcs ZCV39GT or ZCV42GT required.
MQLOG F9	Log Set- 9pcs
MQLOGF39BW	Birch Log Set- 7pcs
MQ39D	Driftwood Log Set- 4pcs (Cannot be used with fiber liners)
MQSTONE	Decorative Stones
MQROCK2	Rock Set Natural
MQROCK3	Rock Set Multi-Color
MQEMBER	Glowing Embers
MQG5W	Decorative Glass 1/2” White 5LB
MQG5A	Decorative Ember Glass Cobalt Blue 5LB
MQG5B	Decorative Ember Glass – Black 5LB
MQG5ZG	Decorative Glass- Zircon Glacier Ice 5LB
Refractory Liners	
ZCV39RLT	Refractory Liner Traditional
ZCV39RLH	Refractory Liner Herringbone
ZCV39RRH	Refractory Liner Red Herringbone
ZCV39RLS	Refractory Liner Stacked Brick
ZCV39PL	Porcelain Reflective Liner
Optional Fan Kit / Blower	
Z46FK	Fan Kit w/Variable Speed Wall Mount Control (Temperature Sensing)
26IDV-P260	Blower Motor (Replacement)
Safety Screens	
ZCV39CSS2	Inside Fit Safety Screen
ZCV39CSS3	Inside Fit Safety Screen
Door Glass	
39ZCV-310	Ceramic Glass- for ZCV39-H Units
39ZCV-311	Tempered Glass- for ZCV39 Units
51MQ-123A	Door Latch Assembly
Replacement Burner Assembly / Burner	
39ZCV-200A	Fireplace Burner
39ZCV-BLPSI	Burner Assembly- Propane c/w Valve System (ZCV39LP)
39ZCV-BLPSIH	Burner Assembly- Propane c/w Valve System (ZCV39LPH)
39ZCV-BNGSI	Burner Assembly- Natural Gas c/w Valve System (ZCV39N)
39ZCV-BNGSIH	Burner Assembly- Natural Gas c/w Valve System (ZCV39NH)
39ZCV-BLPSIE	Burner Assembly- Propane c/w Valve System (ZCV39LPE)
39ZCV-BLPSIHE	Burner Assembly- Propane c/w Valve System (ZCV39LPHE)
39ZCV-BNGSIE	Burner Assembly- Natural Gas c/w Valve System (ZCV39NE)
39ZCV-BNGSIHE	Burner Assembly- Natural Gas c/w Valve System (ZCV39NHE)
Conversion Kit	
39ZCV-CKLP	LP Conversion Kit for 39ZCV Millivolt
39ZCV-CKLPH	LP Conversion Kit for 39ZCVH Millivolt
39ZCV-CKNG	NG Conversion Kit for 39ZCV Millivolt
39ZCV-CKNGH	NG Conversion Kit for 39ZCVH Millivolt
39ZCV-CKLPI	LP Conversion Kit for 39ZCV IPI
39ZCV-CKLPHI	LP Conversion Kit for 39ZCVH IPI
39ZCV-CKNGI	NG Conversion Kit for 39ZCV IPI
39ZCV-CKNGHI	NG Conversion Kit for 39ZCVH IPI
Baffle Conversion Kit	

39ZCV-BCKNG	NG Ceramic Glass upgrade Kit for ZCV39N / NE to ZCV39NH /NHE
39ZCV-BCKLP	LP Ceramic Glass / upgrade Kit for ZCV39LP / LPE to ZCV39LPH /LPHE

Accessories

Z1MT	Thermostat Millivolt Wall Mount
Z80PT	Thermostat Programmable Digital Millivolt Wall Mount (1F80-40)

Valve System Parts / Millivolt

1000-P136WR	Generator / Thermopile
1001-P069SI	Electrode Sparker 915.069 TC SIT
1001-P216SI	Thermocouple 290.216 TC SIT
1001-P165SI	Orifice Pilot NG 977.165 TC SIT
1001-P167SI	Orifice Pilot LP 977.167 TC SIT
1001-P633SI	Valve Nova LP Hi/Lo 0820651
1001-P634SI	Valve Nova NG Hi/Lo 0820652
1001-P713SI	Pilot Burner LP 199.713 TC SIT
1001-P714SI	Pilot Burner NG 199.714 TC SIT

Remote Control / Millivolt

GFRC	Remote Control Millivolt / IPI – On/Off
GTRC	Remote Control Millivolt - Thermostat
GTMRCN	Remote Control Millivolt – Thermostat/Modulating - NG
GTMRCP	Remote Control Millivolt – Thermostat/Modulating - LP
GTFRCN	Remote Control Millivolt – Thermostat/Modulating/Fan - NG
GTFRCP	Remote Control Millivolt – Thermostat/Modulating/Fan - LP

Electronic Ignition/Remote Control IPI

EGTRC	Remote Control IPI (Thermostat)
EGTMRCN	Remote Control IPI (Thermostat/Modulating - NG)
EGTMRCP	Remote Control IPI (Thermostat/Modulating - LP)
EGTFRCN	Remote Control IPI (Thermostat/Modulating/Fan - NG)
EGTFRCP	Remote Control IPI (Thermostat/Modulating/Fan - LP)

Electronic Ignition Replacement Parts IPI

1006-P002si	Valve IPI (NG; Hi/Lo)
1006-P003si	Valve IPI (LP; Hi/Lo)
1002-P047si	Pilot Assembly (LP)
1002-P033si	Pilot Assembly (NG)
1002-P089si	Spark Electrode (Long)
1002-P113si	Electrode Flame Sensor (Long)
1002-P302si	IPI Ignition Board
1002-P850si	AC Wall Adapter
1002-P12BH	Battery Pack
1002-P912si	Wiring Harness
1001-P166si	Orifice Pilot (NG)
1001-P168si	Orifice Pilot (LP)
1002-P013si	Stepper Motor (NG)
1002-P012si	Stepper Motor (LP)
1002-P016si	Hi/Lo Regulator (NG)
1002-P014si	Hi/Lo Regulator (LP)

Miscellaneous Parts

1000-150GE	Silicone GE Red IS806 #736
1000-150MP	Hi-Temp Millpac Sealant 840099
1000-214	Piezo-Igniter 1244-17 MARK 21
1000-215	Pal Nut (18MMXI.5MM)BLK (1364.03)
1000-218	Switch Ivory (1451/001)
1000-227	Cover Ivory (86001/001)
1000-255	Orifice Brass - (State Size)
2000-080	Thermodisc 2450 (For Blower)
1000-306	Thermalcord - Adhesive Back for Door Frame
1000-085	Control Variable Speed KBWC-13BV
FP15GC	Stainless Steel Gas Connector

Kingsman Fireplace Venting

ZDVHSK	**Horizontal Vent Starter Kit - 3 FT Length** Horizontal Vent Termination, Wall Thimble, 36” Flex Pipe, Mill Pac
ZDVHSK5	**Horizontal Vent Starter Kit - 5 FT Length** Horizontal Vent Termination, Wall Thimble, 60” Flex Pipe, Mill Pac
ZDVHSKSQ	**Horizontal Square Termination Vent Starter Kit - 3 FT Length** Horizontal Vent Termination, Wall Thimble, Wall Thimble, 36” Flex Pipe, Mill Pac
ZDVHSKSQ5	**Horizontal Square Termination Vent Starter Kit - 5 FT Length** Horizontal Vent Termination, Wall Thimble, Wall Thimble, 60” Flex Pipe, Mill Pac
FDVVT40	Vertical Vent Termination – with restrictor for runs over 15ft
FDVHT	Horizontal Vent Termination
FDVHSQ	Horizontal Square Termination
Z47ST24	Horizontal Snorkel Termination (24” Tall, 14-1/2” Center to Center)
Z47ST36	Horizontal Snorkel Termination (36” Tall, 26-1/2” Center to Center)
Z57STSC	Safety Cage for Horizontal Snorkel Termination
FDVHSCU	Safety Cage for Horizontal Termination
ZDVAIS	Attic Insulation Shield
ZDVAIS24	Attic Insulation Shield 24”
ZDVVOS	Offset Support
ZDVFS	Firestop Spacer
ZDVRS	Roof Support
ZDVWT	Wall Thimble (Horizontal Venting)
ZDVSS	Siding Shield for FDVHT
ZDVSSLR	Siding Shield - Large Return
Z47GP36	Galvanized Pipe 7” Dia. x 36” (Vertical Installations)
Z47GP48	Galvanized Pipe 7” Dia. x 48” (Vertical Installations)
ZDVAAF	Flashing 7” c/w Storm Collar (1/12 to 7/12)
ZDVAF2	Flashing 7” c/w Storm Collar (8/12 to 12/12)
ZDVAF3	Flashing 7” c/w Storm Collar Flat
ZDV7SC	Storm Collar 7”
ZDVFK5	Flex Kit (4” & 7” Dia.) x 2.5’ (Unexpanded) 5’ Expanded
ZDVFK8	Flex Kit (4” & 7” Dia.) x 4’ (Unexpanded) 8’ Expanded
ZDVFK20	Flex Kit (4” & 7” Dia.) x 10’ (Unexpanded) 20’ Expanded *Kits are complete with spring stand-offs & silicone.
ZDV4FC	Flex Connector 4” Diameter
ZDV7FC	Flex Connector 7” Diameter
ZDV4SS	Spring 4” Standoff Spacer

ZCV42 Parts List

Part Number	Description
Fireplaces	
ZCV42N	(Millivolt) Fireplace Heater rated, NG, Tempered Glass, Safety Screen
ZCV42NH	(Millivolt) Fireplace Heater rated, NG, Ceramic Glass, Safety Screen
ZCV42NE	(IPI) Fireplace Heater Rated NG, Tempered Glass, Safety Screen
ZCV42NE2	(IPI) Fireplace Heater Rated NG, Tempered Glass, Safety Screen, Fan, Remote Control
ZCV42NHE	(IPI) Fireplace Heater Rated NG, Ceramic Glass, Safety Screen
ZCV42NHE2	(IPI) Fireplace Heater Rated NG, Ceramic Glass, Safety Screen, Fan, Remote Control
ZCV42LP	(Millivolt) Fireplace Heater Rated LP, Tempered Glass, Safety Screen
ZCV42LPH	(Millivolt) Fireplace Heater Rated LP, Ceramic Glass, Safety Screen
ZCV42LPE	(IPI) Fireplace Heater Rated LP, Tempered Glass, Safety Screen
ZCV42LPE2	(IPI) Fireplace Heater Rated LP, Tempered Glass, Safety Screen, Fan, Remote Control
ZCV42LPHE	(IPI) Fireplace Heater Rated LP, Ceramic Glass, Safety Screen
ZCV42LPHE2	(IPI) Fireplace Heater Rated LP, Ceramic Glass, Safety Screen, Fan, Remote Control
Wall Surrounds ZCV42	
ZCV42S1BL	Surround - Hearth Mount (44-11/16"W x 38-1/8") Black
ZCV42S1PFBL	Surround – Wide Picture Frame (44-11/16"W x 40-1/8" x 4") Black
ZCV42S2PFBL	Surround - Picture Frame (40-3/16"W x 35-5/8" x 1-5/8") Black
ZCV-TLK	Tile Lip Kit
ZCV42 Options	
LOG F3	Log Set- 5 Pcs
VLBIT4	Log Bits - Large Four Piece Kit
VLBIT6	Log Bits - Small Six Piece Kit
ZCV42GT	Glass Tray- Requires 20LBS Glass
39ZCV-258	Pilot Shield - for ZCV42GT
ZG5C	Decorative Ember Glass –Bronze 5LB
RBCB1	Cannonballs- Assorted size and colors
ULK2	Universal Light Kit
3927ZDV-P779-1	Bulb 10W 12V 64418 or [Sylvania 58691] (light bulbs NOT covered under Warranty.)
5143-P77912	Lamp Assembly 58mm (light bulbs NOT covered under Warranty.)
3927ZDV-P601	Transformer MET60-1
ZCV42 Options – MQ Dealer Only -	
MQ42DD1BL	Heavy Iron Door (42"W x 37-1/2") Black
MQ42DD2BL	Heavy Iron Door (42"W x 37-1/2") Black
MQ42DD3BL	Heavy Iron Door (42"W x 37-1/2") Black
MQ42D	Driftwood Log Set- 6pcs ZCV39GT or ZCV42GT required.
MQLOG F9	Log Set- 9pcs
MQLOGF39BW	Birch Log Set- 7pcs
MQ39D	Driftwood Log Set- 4pcs
	(Cannot be used with fiber liners)
MQSTONE	Decorative Stones
MQROCK2	Rock Set Natural
MQROCK3	Rock Set Multi-Color
MQEMBER	Glowing Embers
MQG5W	Decorative Glass 1/2" White 5LB
MQG5A	Decorative Ember Glass Cobalt Blue 5LB
MQG5B	Decorative Ember Glass – Black 5LB
MQG5ZG	Decorative Glass- Zircon Glacier Ice 5LB
Refractory Liners	
ZCV42RLT	Refractory Liner Traditional
ZCV42RLH	Refractory Liner Herringbone
ZCV42RRH	Refractory Liner Red Herringbone
ZCV42RLS	Refractory Liner Stacked Brick
ZCV42PL	Porcelain Reflective Liner
Optional Fan Kit / Blower	
Z46FK	Fan Kit w/Variable Speed Wall Mount Control (Temperature Sensing)
26IDV-P260	Blower Motor (Replacement)
Safety Screens	
ZCV42CSS2	Inside Fit Safety Screen
ZCV42CSS3	Inside Fit Safety Screen
Door Glass	
42ZCV-310	Ceramic Glass- for ZCV42-H Units
42ZCV-311	Tempered Glass- for ZCV42 Units
51MQ-123A	Door Latch Assembly
Replacement Burner Assembly / Burner	
39ZCV-200A	Fireplace Burner
42ZCV-BLPSI	Burner Assembly- Propane c/w Valve System (ZCV42LP)
42ZCV-BLPSIH	Burner Assembly- Propane c/w Valve System (ZCV42LPH)
42ZCV-BNGSI	Burner Assembly- Natural Gas c/w Valve System (ZCV42N)
42ZCV-BNGSIH	Burner Assembly- Natural Gas c/w Valve System (ZCV42NH)
42ZCV-BLPSIE	Burner Assembly- Propane c/w Valve System (ZCV42LPE)
42ZCV-BLPSIHE	Burner Assembly- Propane c/w Valve System (ZCV42LPHE)
42ZCV-BNGSIE	Burner Assembly- Natural Gas c/w Valve System (ZCV42NE)
42ZCV-BNGSIHE	Burner Assembly- Natural Gas c/w Valve System (ZCV42NHE)
Conversion Kit	
42ZCV-CKLP	LP Conversion Kit for 42ZCV Millivolt
42ZCV-CKLPH	LP Conversion Kit for 42ZCVH Millivolt
42ZCV-CKNG	NG Conversion Kit for 42ZCV Millivolt
42ZCV-CKNGH	NG Conversion Kit for 42ZCVH Millivolt
42ZCV-CKLPI	LP Conversion Kit for 42ZCV IPI
42ZCV-CKLPHI	LP Conversion Kit for 42ZCVH IPI
42ZCV-CKNGI	NG Conversion Kit for 42ZCV IPI
42ZCV-CKNGHI	NG Conversion Kit for 42ZCVH IPI
Baffle Conversion Kit	
42ZCV-BCKNG	NG Ceramic Glass / upgrade Kit for ZCV42N / NE to ZCV42NH /NHE

42ZCV-BCKLP	LP Ceramic Glass / upgrade Kit for ZCV42LP / LPE to ZCV42LPH /LPHE

Accessories

Z1MT	Thermostat Millivolt Wall Mount
Z80PT	Thermostat Programmable Digital Millivolt Wall Mount (1F80-40)

Valve System Parts / Millivolt

1000-P136WR	Generator / Thermopile
1001-P069SI	Electrode Sparker 915.069 TC SIT
1001-P216SI	Thermocouple 290.216 TC SIT
1001-P165SI	Orifice Pilot NG 977.165 TC SIT
1001-P167SI	Orifice Pilot LP 977.167 TC SIT
1001-P633SI	Valve Nova LP Hi/Lo 0820651
1001-P634SI	Valve Nova NG Hi/Lo 0820652
1001-P713SI	Pilot Burner LP 199.713 TC SIT
1001-P714SI	Pilot Burner NG 199.714 TC SIT

Remote Control / Millivolt

GFRC	Remote Control Millivolt / IPI – On/Off
GTRC	Remote Control Millivolt - Thermostat
GTMRCN	Remote Control Millivolt – Thermostat/Modulating - NG
GTMRCP	Remote Control Millivolt – Thermostat/Modulating - LP
GTFRCN	Remote Control Millivolt – Thermostat/Modulating/Fan - NG
GTFRCP	Remote Control Millivolt – Thermostat/Modulating/Fan - LP

Electronic Ignition/Remote Control IPI

EGTRC	Remote Control IPI (Thermostat)
EGTMRCN	Remote Control IPI (Thermostat/Modulating - NG)
EGTMRCP	Remote Control IPI (Thermostat/Modulating - LP)
EGTFRCN	Remote Control IPI (Thermostat/Modulating/Fan - NG)
EGTFRCP	Remote Control IPI (Thermostat/Modulating/Fan - LP)

Electronic Ignition Replacement Parts IPI

1006-P002si	Valve IPI (NG; Hi/Lo)
1006-P003si	Valve IPI (LP; Hi/Lo)
1002-P047si	Pilot Assembly (LP)
1002-P033si	Pilot Assembly (NG)
1002-P089si	Spark Electrode (Long)
1002-P113si	Electrode Flame Sensor (Long)
1002-P302si	IPI Ignition Board
1002-P850si	AC Wall Adapter
1002-P12BH	Battery Pack
1002-P912si	Wiring Harness
1001-P166si	Orifice Pilot (NG)
1001-P168si	Orifice Pilot (LP)
1002-P013si	Stepper Motor (NG)
1002-P012si	Stepper Motor (LP)
1002-P016si	Hi/Lo Regulator (NG)
1002-P014si	Hi/Lo Regulator (LP)

Miscellaneous Parts

1000-150GE	Silicone GE Red IS806 #736
1000-150MP	Hi-Temp Millpac Sealant 840099
1000-214	Piezo-Igniter 1244-17 MARK 21
1000-215	Pal Nut (18mm x 1.5mm) BLK (1364.03)
1000-218	Switch Ivory (1451/001)
1000-227	Cover Ivory (86001/001)
1000-255	Orifice Brass - (State Size)
2000-080	Thermodisc 2450 (For Blower)
1000-306	Thermalcord - Adhesive Back for Door Frame
1000-085	Control Variable Speed KBWC-13BV
FP15GC	Stainless Steel Gas Connector

Kingsman Fireplace Venting

ZDVHSK	**Horizontal Vent Starter Kit - 3 FT Length** Horizontal Vent Termination, Wall Thimble, 36” Flex Pipe, Mill Pac
ZDVHSK5	**Horizontal Vent Starter Kit - 5 FT Length** Horizontal Vent Termination, Wall Thimble, 60” Flex Pipe, Mill Pac
ZDVHSKSQ	**Horizontal Square Termination Vent Starter Kit -3 FT Length** Horizontal Vent Termination, Wall Thimble, Wall Thimble, 36” Flex Pipe, Mill Pac
ZDVHSKSQ5	**Horizontal Square Termination Vent Starter Kit -5 FT Length** Horizontal Vent Termination, Wall Thimble, Wall Thimble, 60” Flex Pipe, Mill Pac
FDVVT40	Vertical Vent Termination – with restrictor for runs over 15ft
FDVHT	Horizontal Vent Termination
FDVHSQ	Horizontal Square Termination
Z47ST24	Horizontal Snorkel Termination (24” Tall, 14-1/2” Center to Center)
Z47ST36	Horizontal Snorkel Termination (36” Tall, 26-1/2” Center to Center)
Z57STSC	Safety Cage for Horizontal Snorkel Termination
FDVHSCU	Safety Cage for Horizontal Termination
ZDVAIS	Attic Insulation Shield
ZDVAIS24	Attic Insulation Shield 24”
ZDVVOS	Offset Support
ZDVFS	Firestop Spacer
ZDVRS	Roof Support
ZDVWT	Wall Thimble (Horizontal Venting)
ZDVSS	Siding Shield for FDVHT
ZDVSSLR	Siding Shield - Large Return
Z47GP36	Galvanized Pipe 7” Dia. x 36” (Vertical Installations)
Z47GP48	Galvanized Pipe 7” Dia. x 48” (Vertical Installations)
ZDVAAF	Flashing 7” c/w Storm Collar (1/12 to 7/12)
ZDVAF2	Flashing 7” c/w Storm Collar (8/12 to 12/12)
ZDVAF3	Flashing 7” c/w Storm Collar Flat
ZDV7SC	Storm Collar 7”
ZDVFK5	Flex Kit (4” & 7” Dia.) x 2.5’ (Unexpanded) 5’ Expanded
ZDVFK8	Flex Kit (4” & 7” Dia.) x 4’ (Unexpanded) 8’ Expanded
ZDVFK20	Flex Kit (4” & 7” Dia.) x 10’ (Unexpanded) 20’ Expanded *Kits are complete with spring stand-offs & silicone.
ZDV4FC	Flex Connector 4” Diameter
ZDV7FC	Flex Connector 7” Diameter
ZDV4SS	Spring 4” Standoff Spacer

Troubleshooting the Gas Control System

⚠ WARNING

BEFORE DOING ANY GAS CONTROL SERVICE WORK, REMOVE THE GLASS FRONT.
NOTE: Before troubleshooting the gas control system, be sure external gas shut off is in the "On" position.

Problem	Possible Causes	Corrective Action
Spark igniter will not light.	Defective or misaligned electrode at pilot.	Check for spark at electrode and pilot: if no spark and electrode wire is properly connected, replace igniter.
	Defective igniter (push-button).	Using a match, light pilot. If pilot lights, turn off pilot and push the red button again. If pilot will not light - check gap at electrode and pilot should be 1/8" to 1/4" to have a strong spark.
Pilot will not stay lit after carefully following lighting instructions.	Defective thermocouple (flame switch where applicable).	Check pilot flame. Must impinge on generator and thermocouple. Clean and/or adjust pilot for maximum flame impingement on generator and thermocouple. Replace thermocouple if pilot will not hold. (Hand tight 1/8 turn on replacement)
	Defective valve magnet.	Replace valve, if pilot won't hold after the thermocouple is replaced.
Pilot burning, no gas to burner, valve knob “ON”, and wall switch “ON”.	Wall switch or wires defective.	Check wall switch and wires for proper connections. Jumper wire across terminals at wall switch. If burner comes on, replace defective wall switch. If okay, jumper wires, across wall switch wires at valve. If burner comes on, wires are faulty or connections are bad.
	Generator may not be generating sufficient voltage.	Check generator with millivolt meter. Take reading at generator terminals of gas valve. Should read 325 millivolts minimum while holding valve knob depressed in pilot position and wall switch "off" Replace faulty generator if reading is below specified minimum.
	Plugged burner orifice.	Check burner orifice for stoppage and remove.
	Defective automatic valve operator.	Remove wall switch wires from gas valve. Install jumper wires from top bottom terminals of gas valve. Turn valve on "ON". If main burner does not light, replace valve.
Frequent pilot outage problem.	Pilot flame may be too low or blowing (high) causing the pilot safety to drop out.	Clean and/or adjust pilot flame for maximum flame impingement on generator and thermocouple. *See NOTE below – Seven Day Timer
Flame lifts off burner and goes out in less than 30 seconds.	Inner 4” liner has come off flue or termination, flame is starving for oxygen.	Attach 4" liner to flue or termination using screws, silicone and clamps as stated in manual.
Flame lifts off burner on one side while the rest of the flame remains lit.	Improper installation of firebrick. Firebrick is likely leaning.	Be sure to position firebrick against firebox walls and be sure to use brick clips attached to the inner side of firebox.

***NOTE:** The pilot system for this appliance may be equipped with a **Seven Day Timer**, in which case the pilot flame will be extinguished if the main burner has not been turned ON for seven days.

This Seven Day Cycle is reset every time the main burner is cycled ON / OFF and the pilot remains lit.

If more than seven days has passed since the main burner has been cycled ON / OFF and the pilot is also out, follow the procedures described in this manual to light the pilot.

NOTE: MILLIVOLT UNITS WITH 7 DAY TIMER – When lighting pilot, the Pilot Knob must be pressed until a **BEEP** is heard. This procedure may take up to **TWO MINUTES.**

LIMITED LIFETIME WARRANTY

This Limited Lifetime Warranty applies only while the unit remains at the site of the original installation and only if the unit is installed inside the continental United States, Alaska, Hawaii, and Canada. The warranty applies only if the unit is installed and operated in accordance with the printed instructions and in compliance with applicable installation and building codes and good trade practices.

BASIC ONE YEAR WARRANTY

During the first year after installation of the appliance, we will provide a replacement for any component part of your unit found to be defective in materials or workmanship, including labour costs. Repair work requires prior approval by Kingsman, labour costs are based on a predetermined rate schedule and any repair work must be done through an authorized Kingsman dealer.
(Excluded Components: Accent Light Bulbs, Gasketing, Glass Fronts, and Paint)

LIMITED LIFETIME WARRANTY

The heat exchanger, combustion chamber and burner of every Kingsman product excluding the Outdoor Firepit are warranted against materials or workmanship during the period the product is owned by the original owner. The part to be replaced must be returned to our distributor in exchange for the replacement part. Any labor, material, freight and/or handling charges associated with any repair or replacement pursuant to this Limited Lifetime Warranty will not be covered by this warranty.

GENERAL TERMS

In lieu of providing a replacement part, we may, at our option, provide the distributor's component purchase price from us or a credit equal to the distributor's component purchase price from us toward the purchase of any new unit which we distribute. If a credit is given in lieu of a replacement part, the rating plate from the unit being replaced must be submitted on a warranty claim, and the unit being replaced must be made available to our distributor for disposition.

In establishing the date of installation for any purpose, including determination of the starting date for the term of this Limited Lifetime Warranty, reasonable proof of the original installation date must be presented*, otherwise the effective date will be based upon the date of manufacture plus thirty (30) days.

We will not be responsible for and you, the user, will pay for: (a) damages caused by accident, abuse, negligence, misuse, riot, fire, flood, or Acts of God (b) damages caused by operating the unit where there is a corrosive atmosphere containing chlorine, fluorine, or any other damaging chemicals (other than in a normal residential environment) (c) damages caused by any unauthorized alteration or repair of the unit affecting its stability or performance (d) damages caused by improper matching or application of the unit or the unit's components (e) damages caused by failing to provide proper maintenance and service to the unit (f) any expenses incurred for erecting, disconnecting or dismantling the unit (g) parts or supplies used in connection with service or maintenance (h) damage repairs, inoperation or inefficiency resulting from faulty installation or application (i) electricity or fuel costs or any increase in electricity or fuel cost whatsoever including additional or unusual use of supplemental electric heat.

We shall not be liable for any incidental, consequential, or special damages or expenses in connection with any use or failure of this unit. We have not made and do not make any representation or warranty of fitness for a particular use or purpose, and there is no implied condition of fitness for a particular use or purpose. We make no express warranties except as stated in this Limited Lifetime Warranty. No one is authorized to change this Limited Lifetime Warranty or to create for us any other obligation or liability in connections with this unit. Any implied warranties shall last for one year after the original installation. Some states and provinces do not allow the exclusion or limitation of incidental or consequential damages or do not allow limitations on how long an implied warranty or condition lasts, so the above limitations or exclusions may not apply to you. The provisions of this limited warranty are in additions to and not a modification of or subtraction from any statutory warranties and other rights and remedies provided by law.

Save this certificate. It gives you specific legal rights, and you may also have other rights which may vary from state to state and province to province.

In the event your unit needs servicing, contact your dealer or contractor who installed or serviced your unit. When requesting service, please have the model and serial number from each unit readily available. If your dealer needs assistance, the distributor is available for support and we, in turn support the distributor's efforts.

Fill in the installation date and model and serial numbers of the unit in the space provided below and retain this limited warranty for your files.

Model No. _____ **Serial No.** _____ **Date installed** _____

Dealer or Contractor Name: _____

*To receive advantage of your warranty, you must retain the original records that can establish the installation date of your unit.

The Ultimate in Design, Engineering & Quality