Installation/Owner Manual

Installation and Appliance Setup, Care and Operation

INSTALLER: Leave this manual with party responsible for use and operation.
OWNER: Retain this manual for future reference.

***NOTICE: DO NOT** discard this manual!*

MONESSEN

Natural Blaze Series Gas Log Set

Model(s):

NB18NV-B; NB24NV-B

NB18PV-B; NB24PV-B

NB18NIF-B; NB24NIF-B

NB18PIF-B; NB24PIF-B

GAS-FIRED
UL
LISTED
MH62794

GAS-FIRED
UL
LISTED
MH62954
(U.S. Only)

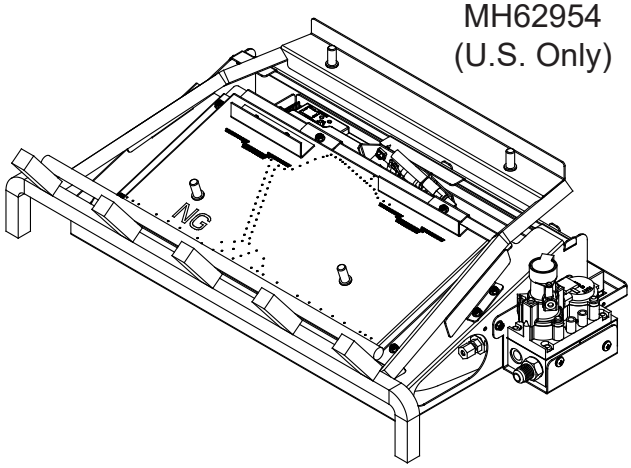

In the Commonwealth of Massachusetts installation must be performed by a licensed plumber or gas fitter.

See appliance installation manual for additional Commonwealth of Massachusetts requirements.

⚠ WARNING

If the information in this manual is not followed exactly, a fire or explosion may result causing property damage, personal injury or loss of life.

- **DO NOT** store or use gasoline or other flammable vapors and liquids in the vicinity of this or any other appliance.
- **WHAT TO DO IF YOU SMELL GAS:**
  - **DO NOT** try to light any appliance.
  - **DO NOT** touch any electrical switch
  - **DO NOT** use any phone in your building.
  - Immediately call your gas supplier from a neighbor's phone. Follow the gas supplier's instructions.
  - If you cannot reach your gas supplier, call the fire department.
- Installation and service must be performed by a qualified installer, service agency or the gas supplier.

This is an unvented gas-fired heater. It uses air (oxygen) from the room in which it is installed. Provisions for adequate combustion and ventilation air must be provided. Refer to Section 3.G of this manual.

This appliance may be installed in an aftermarket, permanently located, manufactured (mobile) home, where not prohibited by local codes.
This appliance is only for use with the type of gas indicated on the rating plate. This appliance is not convertible for use with other gases.

DO NOT install this appliance in a bedroom or bathroom.

⚠ Safety Alert Key:

- ***DANGER!*** *Indicates a hazardous situation which, if not avoided will result in death or serious injury.*
- ***WARNING!*** *Indicates a hazardous situation which, if not avoided could result in death or serious injury.*
- ***CAUTION!*** *Indicates a hazardous situation which, if not avoided, could result in minor or moderate injury.*
- ***NOTICE:*** *Used to address practices not related to personal injury.*

Table of Contents

1 Welcome

A. Congratulations 3
B. Limited Lifetime Warranty 4
C. Installation Standard Work Checklist 6

2 Product Specific Information

A. Appliance Certification 7
B. BTU Specifications and Weight 7
C. Gas Pressures 7
D. High Altitude Installations 7
E. Non-Combustible Materials Specification 7
F. Combustible Materials Specification 7
G. California 7
H. Requirements for the Commonwealth of Massachusetts . . 8

3 Getting Started

A. Design and Installation Considerations 9
B. Tools and Supplies Needed 9
C. Inspect Appliance and Components 9
D. Check Parts 9
E. Minimum Hearth Dimensions 10
F. Restrictive Barriers 10
G. Adequate Combustion Ventilation Air 11
H. Negative Pressure 11

4 Important Safety Information

A. Appliance Safety 12
B. General Operating Parts 12

5 Clearances

A. Clearance to Combustibles 14

6 Fireplace Preparation

A. Installation Information 17
B. Unvented Installations 17
C. Vented Installations 17

7 Gas Information

A. Fuel Type 19
B. Gas Pressure 19
C. Gas Connection and Gas Line Purging 19
D. Verify Gas Pressure 20

8 Electrical Information

A. General Information 21
B. Standing Pilot Models 21
C. Intellifire™ Plus (IPI) Models 22

9 Appliance Installation and Set-up

A. Position and Secure Appliance 24
B. Switch or Remote Install (Standing Pilot) 24
C. Remote Installation (Intellifire™ Plus) 24
D. Log and Media Placement 25
E. Flame Appearance 25
F. Operating Instructions 26
G. Initial Use 26

10 Lighting Instructions

A. Standing Pilot (Millivolt) 27
B. Intellifire™ Plus (IPI) 28

11 Maintenance and Service

A. Maintenance: Frequency and Tasks 29
B. Maintenance Tasks: Homeowner 29
C. Maintenance Tasks: Service Technician 29

12 Troubleshooting

A. Frequently Asked Questions 31
B. Standing Pilot (millivolt) Control System 31
C. IntelliFire™ Plus ODS Control System 32

13 Service Parts

► A. Service Parts 34

14 Reference Materials

A. Accessories 42
B. Contact Information 43

► = Contains updated information

1 Welcome

A. Congratulations

Congratulations and thank you for selecting a Monessen gas log set, an elegant and clean alternative to wood burning fireplaces. The gas log set you have selected is designed to provide the utmost in safety, efficiency, and style.

As the owner of a new gas log set, you'll want to read and carefully follow all of the instructions contained in this owner's manual. Pay special attention to all cautions and warnings.

This owner's manual should be retained for future reference. We suggest that you keep it with your other important documents and product manuals.

The information contained in this owner's manual, unless noted otherwise, applies to all models and gas control systems noted on the cover page.

Your new gas log set will give you years of durable use and trouble-free enjoyment. Welcome to the Hearth & Home family.

Local Dealer Information

Dealer: Fill in your name, address, phone number and email information in the space provided.

Dealer Name: _____

Address: _____

_____

Phone Number: _____

Email: _____

Appliance Information:

Brand: _____ Model Name: _____

Serial Number: _____ Date Installed: _____

Listing Label Information/Location

The model information regarding your specific gas log set can be found on the rating plate usually located in the control area of the gas log set.

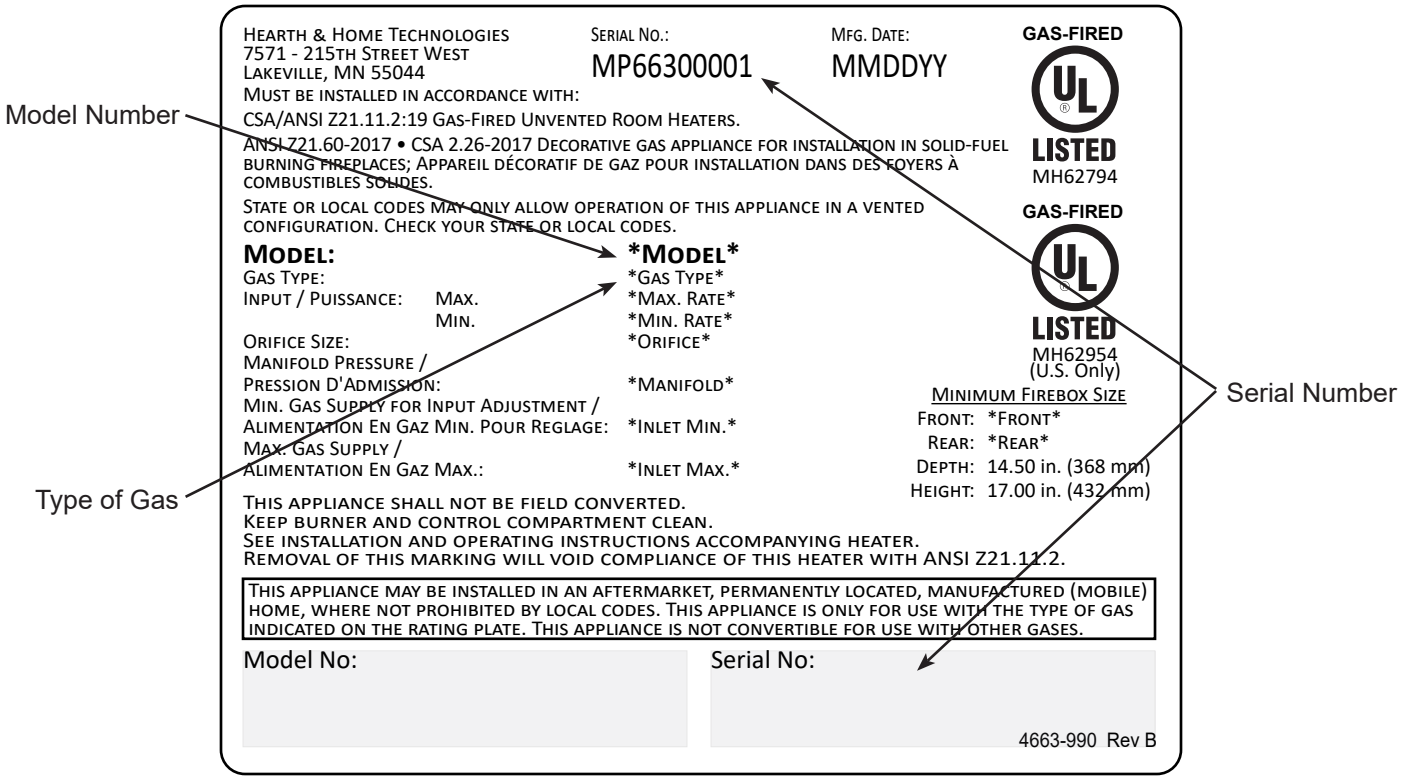

B. Limited Lifetime Warranty

Hearth & Home Technologies LLC

LIMITED WARRANTY

Hearth & Home Technologies LLC ("HHT") extends the following warranty for HHT gas, wood, pellet and electric hearth appliances (each a "Product" and collectively, the "Product(s)") and certain component parts set forth in the table below ("Component Part(s)") that are purchased from a HHT authorized dealer or distributor.

WARRANTY COVERAGE:

HHT warrants that the Products and their Component Parts will be free from defects in materials and workmanship for the applicable period of Warranty coverage set forth in the table below ("Warranty Period"). If a Product or Component Parts are found to be defective in materials or workmanship during the applicable Warranty Period, HHT will, at our discretion, repair the applicable Component Part(s), replace the applicable Component Part(s), or refund the purchase price of the applicable Product(s). The maximum amount recoverable under this Warranty is limited to the purchase price of the Product. This Warranty is transferable from the original purchaser to subsequent owners, but the Warranty Period will not be extended in duration or expanded in coverage for any such transfer. This Warranty is subject to conditions, exclusions, and limitations as described below.

WARRANTY PERIOD:

Warranty coverage begins at the date of installation. In the case of new home constructions, Warranty coverage begins six months after invoice of the final sale of the Product(s) by an independent, authorized HHT dealer or distributor. However, the Warranty coverage shall commence no later than 24 months following the date of Product shipment from HHT, regardless of the installation or purchase date.

Warranty Period		**HHT Manufactured Appliances and Venting**				
Component Parts	Labor	Gas	Pellet	Wood	Electric	Component Parts Covered by this Warranty
1 Year		X	X	X		All parts including handles, external enameled components and other material except as covered by Warranty Conditions, Warranty Exclusions, and Warranty Limitations listed
2 Years					X	All parts except as covered by Warranty Conditions, Warranty Exclusions, and Warranty Limitations listed
			X	X		Glass, Electrical components limited to heating element/igniters, Top feed auger assembly, Blowers, Junction Box, Remotes/Wall switches, linear actuator, power cord, vacuum switch, snap disc, wire harnesses and thermocouple
		X				Electrical components limited to modules, remotes/wall switches, valves, pilots, blowers, junction boxes, wire harnesses, transformers and lights (excluding light bulbs)
		X		X		Cement Refractory Panels, Glass Liner Panels
3 years			X			Firepots, burnpots, Harman mechanical feeders
5 years		X		X		Catalysts, Vented and Vent Free burners and logs
10 years	1 year	X				Burners, logs and metal/fiber refractory components of HHT manufactured fireplaces or stoves, venting due to poor workmanship
10 years	3 years		X	X		Castings, Medallions & Baffles, FlexBurn® System (engine, inner cover, access cover and fireback), Firebox and heat exchanger, HHT Chimney & Terminations, Manifolds
20 years	3 years	X				Firebox and heat exchanger
All purchased replacement parts and optional accessories						
1 Year	None	X	X	X	X	All purchased replacement parts and optional accessories

B. Limited Lifetime Warranty *(continued)*

WARRANTY CONDITIONS:

- Because HHT cannot control the quality of any Products sold by unauthorized sellers, this Warranty only covers Products that are purchased through an HHT authorized dealer or distributor unless otherwise prohibited by law; a list of HHT authorized dealers is available on the HHT branded websites.
- This Warranty is only valid while the applicable Product remains at the site of original installation.
- This Warranty is only valid in the country in which the HHT authorized dealer or distributor that sold the applicable Product is authorized to sell applicable Product.
- Contact your installing distributor or dealer for Warranty service. If the installing dealer or distributor is unable to provide necessary parts, contact the nearest HHT authorized dealer or supplier. Additional service fees may apply if you are seeking Warranty service from a dealer other than the dealer from whom you originally purchased the applicable Product.
- No HHT consumer should bear cost of warranty service or costs incurred while servicing warranty claims (i.e., travel, gas, or mileage) when the service is performed within the terms of this Warranty. Check with your dealer or distributor in advance for any costs to you when arranging a warranty call. Travel and shipping charges for parts are not covered by this Warranty.

WARRANTY EXCLUSIONS:

This Warranty does not cover the following:

- Changes in surface finishes as a result of normal use. As a heating appliance, some changes in color of interior and exterior surface finishes may occur. This is not a flaw and is not covered under the Warranty.
- Damage to printed, plated, or enameled surfaces caused by fingerprints, accidents, misuse, scratches, melted items or other external sources and residues left on the plated surfaces from the use of abrasive cleaners or polishes.
- Repair or replacement of parts that are subject to normal wear and tear during the Warranty Period are not covered. These parts include: paint, wood and pellet gaskets, firebricks, wood grates, flame guides, batteries and the discoloration of glass.
- Minor expansion, contraction, or movement of certain parts causing noise. These conditions are normal and complaints related to this noise are not covered by this Warranty.
- Damages resulting from: (1) failure to install, operate, or maintain the applicable Product in accordance with the installation instructions, operating instructions, and listing agent identification label furnished with the applicable Product; (2) failure to install the applicable Product in accordance with local building codes; (3) shipping or improper handling; (4) improper operation, abuse, misuse, continued operation with damaged, corroded or failed components, accident, or improperly/incorrectly performed repairs; (5) environmental conditions, inadequate ventilation, negative pressure, or drafting caused by tightly sealed constructions, insufficient make-up air supply, or handling devices such as exhaust fans or forced air furnaces or other such causes; (6) use of fuels other than those specified in the operation instructions; (7) installation or use of components not supplied with the applicable Product or any other components not expressly authorized and approved by HHT; (8) modification of the appliance not expressly authorized and approved by HHT in writing; and/or (9) interruptions or fluctuations of electrical power supply to the applicable Product.
- Non-HHT venting components, hearth connections or other accessories used in conjunction with the applicable Product.
- Any part of a pre-existing fireplace system in which an insert or a decorative gas applicable Product is installed.
- HHT's obligation under this Warranty does not extend to the Product's capability to heat the desired space. Information is provided to assist the consumer and the dealer in selecting the proper Product for the application. Consideration must be given to the Product location and configuration, environmental conditions, insulation and air tightness of the structure.

This warranty is void if:

- The applicable Product has been over-fired, operated in atmospheres contaminated by chlorine, fluorine, or other damaging chemicals. Over-firing can be identified by, but not limited to, warped plates or tubes, deformation/warping of interior cast iron structure or components, rust colored cast iron, bubbling, cracking and discoloration of steel or enamel finishes.
- The applicable Product is subjected to prolonged periods of dampness or condensation.
- There is any damage to the applicable Product due to water or weather damage which is the result of, but not limited to, improper chimney or venting installation.

LIMITATIONS OF REMEDIES AND LIABILITY:

- **EXCEPT TO THE EXTENT PROVIDED BY LAW, HHT MAKES NO EXPRESS WARRANTIES OTHER THAN THE WARRANTY SPECIFIED HEREIN. The owner's exclusive remedy and HHT's sole obligation under this Warranty or in contract, tort or otherwise, shall be limited to, at HHT's sole option, replacement of the Component Part(s), repair of the Component Part(s), or refund of the original purchase price of the applicable Product(s). In no event will HHT be liable for any incidental or consequential damages caused by defects in the applicable Product. Some States do not allow the exclusion or limitation of incidental or consequential damages, so the above limitation or exclusion may not apply to you. This Warranty gives you specific legal rights and you may also have other rights which vary from State to State. THE DURATION OF ANY IMPLIED WARRANTY IS LIMITED TO DURATION OF THE EXPRESSED WARRANTY SPECIFIED ABOVE FOR THE APPLICABLE PRODUCT. Some States do not allow limitations on how long an implied warranty lasts, so the above limitation may not apply to you.**

C. Installation Standard Work Checklist

ATTENTION INSTALLER:

Follow this Standard Work Checklist

This standard work checklist is to be used by the installer in conjunction with, not instead of, the instructions contained in this installation manual.

Customer: _____

Lot/Address: _____

Model: **(circle one)**
NB18NV-B NB18NIF-B
NB24NV-B NB24NIF-B
NB18PV-B NB18PIF-B
NB24PV-B NB24PIF-B

Date Installed: _____

Location of Appliance: _____

Installer: _____

Dealer/Distributor Ph. #: _____

Serial #: _____

WARNING! Risk of Fire or Explosion! *Failure to install appliance according to these instructions could lead to a fire or explosion.*

	YES	IF NO, WHY?
Fireplace/Firebox Preparation Sections 3 - 6		
• Minimum firebox dimensions met?	☐	_____
• Adequate combustion ventilation air verified?	☐	_____
• Verified clearances to combustibles?	☐	_____
• Fireplace chimney has been cleaned (if applicable)?	☐	_____
• Damper stop properly installed (if applicable)?	☐	_____
Gas Section 7		
• Proper appliance selected for fuel type?	☐	_____
• Proper air shutter setting for fuel type verified?	☐	_____
• Inlet and oulet pressures verified?	☐	_____
• Leak check performed?	☐	_____
Electrical Section 8		
• Verified switch wires or remote control properly installed?	☐	_____
Appliance Installation and Set-up Section 9		
• Appliance properly positioned and secured?	☐	_____
• Media and logs installed correctly?	☐	_____
• Verified flame appearance?	☐	_____
• Verified packaging and protective materials removed?	☐	_____
• Manual bag and contents given to party responsible for use and operation?	☐	_____

Hearth & Home Technologies recommends the following:

- Photographing the installation and copying this checklist for your file.
- That this checklist remain visible at all times on the appliance until the installation is complete.

Comments: Further description of the issues, who is responsible (Installer/ Builder/ Other Trades, etc) and corrective action needed: _____

Comments communicated to party responsible: _____ By: _____ On: _____
(Builder / General Contractor) (Installer) (Date)

2 Product Specific Information

A. Appliance Certification

MODEL(S):	NB18NV-B, NB18PV-B, NB18NIF-B, NB18PIF-B, NB24NV-B, NB24PV-B, NB24NIF-B, NB24PIF-B
LABORATORY:	Underwriters Laboratories (UL)
TYPE:	Unvented Room Heater
STANDARD:	CSA/ANSI Z21.11.2:19 Gas-Fired Unvented Room Heaters.
TYPE:	Vented Gas Log Set (U.S. Only)
STANDARD:	ANSI Z21.60-2017 • CSA 2.26-2017 Decorative gas appliance for installation in solid-fuel burning fireplaces.

This product is listed to ANSI standards for “Unvented Room Heaters”, "Vented Gas Log Sets” and applicable sections of "Gas Burning Heating Appliances for Manufactured Homes" and "Gas Fired Appliances for Use at High Altitude."

NOTICE: *This installation must conform with local codes. In the absence of local codes you must comply with the National Fuel Gas Code, ANSI Z223.1-latest edition in the U.S.A.*

NOT INTENDED FOR USE AS A PRIMARY HEAT SOURCE. This appliance is tested and approved as either supplemental room heater or as a decorative appliance. It should not be factored as primary heat in residential heating calculations.

This appliance must not be used to burn solid fuel.

This appliance must NOT be operated with glass doors in the closed position.

Thermostat control is NOT allowed in vented installations.

B. BTU Specifications and Weight

Models	Max. Input (BTU/hr)	Min. Input (BTU/hr)	Main Burner Orifice	Weight (lbs.)
NB18NV-B	29,000	20,000	.104 in. (2.6 mm)	30
NB18PV-B	28,000	21,000	.0635 in. (1.6 mm)	30
NB18NIF-B	29,000	20,000	.104 in. (2.6 mm)	30
NB18PIF-B	28,000	21,000	.0635 in. (1.6 mm)	30
NB24NV-B	37,000	26,000	.118 in. (3.0 mm)	35
NB24PV-B	36,000	27,000	.073 in. (1.9 mm)	35
NB24NIF-B	37,000	26,000	.118 in. (3.0 mm)	35
NB24PIF-B	36,000	27,000	.073 in. (1.9 mm)	35

C. Gas Pressures

	Natural	Propane (LP)
Inlet Minimum	5.0” W.C.	11.0” W.C.
Inlet Maximum	10.0” W.C.	13.0” W.C.
Manifold Pressure	3.5” W.C.	10.0” W.C.
Pilot Regulator	3.5” W.C.	NA

Natural Gas: An external regulator is required to reduce supply pressure to a maximum of 10.0” W.C. for natural gas systems operating at higher pressure.

Propane/LP: An external regulator is required to reduce supply pressure to a maximum of 13.0” W.C.

Pilot/ODS: This gas log heater is fitted with a specially designed safety pilot (ODS assembly) which senses the amount of oxygen available in the room and shuts the gas log heater off if the oxygen level begins to drop below a satisfactory level. The pilot can only be re-lit when adequate fresh air is available.

D. High Altitude Installations

NOTICE: *If the heating value of the gas has been reduced, these rules do not apply. Check with your local gas utility or authorities having jurisdiction.*

When installing above 2000 feet elevation:

- In the USA: Reduce input rate 4% for each 1000 feet above 2000 feet.
- In CANADA: Input ratings are certified without a reduction of input rate for elevations up to 4500 feet (1370 m) above sea level. Please consult provincial and/ or local authorities having jurisdiction for installations at elevations above 4500 feet (1370 m).Check with your local gas utility to determine proper orifice size.

Check with your local gas utility to determine proper orifice size

E. Non-Combustible Materials Specification

Material which will not ignite and burn. Such materials are those consisting entirely of steel, iron, brick, tile, concrete, slate, glass or plasters, or any combination thereof.

Materials that are reported as passing **ASTM E 136, Standard Test Method for Behavior of Materials in a Vertical Tube Furnace at 750ºC** shall be considered non-combustible materials**.**

F. Combustible Materials Specification

Materials made of or surfaced with wood, compressed paper, plant fibers, plastics, or other material that can ignite and burn, whether flame proofed or not, or plastered or unplastered shall be considered combustible materials.

G. California

⚠ **WARNING!** This product and the fuels used to operate this product (liquid propane or natural gas), and the products of combustion of such fuels, can expose you to chemicals including benzene, which is known to the State of California to cause cancer and reproductive harm. For more information go to: www.P65Warnings.ca.gov.

Note: The following requirements reference various Massachusetts and national codes not contained in this document.

H. Requirements for the Commonwealth of Massachusetts

For all side wall horizontally vented gas fueled equipment installed in every dwelling, building or structure used in whole or in part for residential purposes, including those owned or operated by the Commonwealth and where the side wall exhaust vent termination is less than seven (7) feet above finished grade in the area of the venting, including but not limited to decks and porches, the following requirements shall be satisfied:

Installation of Carbon Monoxide Detectors

At the time of installation of the side wall horizontal vented gas fueled equipment, the installing plumber or gas fitter shall observe that a hard wired carbon monoxide detector with an alarm and battery back-up is installed on the floor level where the gas equipment is to be installed. In addition, the installing plumber or gas fitter shall observe that a battery operated or hard wired carbon monoxide detector with an alarm is installed on each additional level of the dwelling, building or structure served by the side wall horizontal vented gas fueled equipment. It shall be the responsibility of the property owner to secure the services of qualified licensed professionals for the installation of hard wired carbon monoxide detectors.

In the event that the side wall horizontally vented gas fueled equipment is installed in a crawl space or an attic, the hard wired carbon monoxide detector with alarm and battery back-up may be installed on the next adjacent floor level.
In the event that the requirements of this subdivision can not be met at the time of completion of installation, the owner shall have a period of thirty (30) days to comply with the above requirements; provided, however, that during said thirty (30) day period, a battery operated carbon monoxide detector with an alarm shall be installed.

Approved Carbon Monoxide Detectors

Each carbon monoxide detector as required in accordance with the above provisions shall comply with NFPA 720 and be ANSI/UL 2034 listed and IAS certified.

Signage

A metal or plastic identification plate shall be permanently mounted to the exterior of the building at a minimum height of eight (8) feet above grade directly in line with the exhaust vent terminal for the horizontally vented gas fueled heating appliance or equipment. The sign shall read, in print size no less than one-half (1/2) inch in size, **"GAS VENT DIRECTLY BELOW. KEEP CLEAR OF ALL OBSTRUCTIONS".**

Inspection

The state or local gas inspector of the side wall horizontally vented gas fueled equipment shall not approve the installation unless, upon inspection, the inspector observes carbon monoxide detectors and signage installed in accordance with the provisions of 248 CMR 5.08(2)(a)1 through 4.

Exemptions

The following equipment is exempt from 248 CMR 5.08(2)(a)1 through 4:

- The equipment listed in Chapter 10 entitled "Equipment Not Required To Be Vented" in the most current edition of NFPA 54 as adopted by the Board; and
- Product Approved side wall horizontally vented gas fueled equipment installed in a room or structure separate from the dwelling, building or structure used in whole or in part for residential purposes.

MANUFACTURER REQUIREMENTS

Gas Equipment Venting System Provided

When the manufacturer of Product Approved side wall horizontally vented gas equipment provides a venting system design or venting system components with the equipment, the instructions provided by the manufacturer for installation of the equipment and the venting system shall include:

- Detailed instructions for the installation of the venting system design or the venting system components; and
- A complete parts list for the venting system design or venting system.

Gas Equipment Venting System NOT Provided

When the manufacturer of a Product Approved side wall horizontally vented gas fueled equipment does not provide the parts for venting the flue gases, but identifies "special venting systems", the following requirements shall be satisfied by the manufacturer:

- The referenced "special venting system" instructions shall be included with the appliance or equipment installation instructions; and
- The "special venting systems" shall be Product Approved by the Board, and the instructions for that system shall include a parts list and detailed installation instructions.

A copy of all installation instructions for all Product Approved side wall horizontally vented gas fueled equipment, all venting instructions, all parts lists for venting instructions, and/or all venting design instructions shall remain with the appliance or equipment at the completion of the installation.

See Gas Connection section for additional Commonwealth of Massachusetts requirements.

3 Getting Started

A. Design and Installation Considerations

Installation MUST comply with local, regional, state and national codes and regulations. Consult insurance carrier, local building inspector, fire officials or authorities having jurisdiction over restrictions, installation inspection and permits.

Before installing, determine the following:

- Where burner assembly and log set are to be installed.
- Gas Supply piping.
- Whether optional accessories, devices such as a wall switch or remote control are desired.
- Approved wood burning masonry fireplace or vent-free firebox.

Installation and service of this appliance should be performed by qualified personnel. Hearth & Home Technologies recommends HHT Factory Trained or NFI certified professionals.

hearthED FACTORY TRAINING Fuel Your Fire

NFI NATIONAL FIREPLACE INSTITUTE A CERTIFICATION AGENCY

Installation and repair should be done by a qualified service person. The appliance should be inspected before use and at least annually by a professional service person. More frequent cleaning may be required due to excessive lint from carpeting, bedding material, etc. It is imperative that control compartments, burners, and circulating air passageways of the appliance be kept clean.

B. Tools and Supplies Needed

Before beginning the installation be sure that the following tools and building supplies are available.

- Tape measure
- Gloves
- Pipe wrench
- Phillips screwdriver
- Safety glasses
- Flat blade screwdriver
- Manual shutoff valve
- Sediment trap
- Tee joint
- Voltmeter
- Manometer
- Soapy water solution for gas leak testing
- Electric drill and bits (1/4 in. magnetic)
- External regulator (for propane/LP only & 1/2 psi Natural gas system)
- Piping which complies with local codes
- Pipe sealant approved for use with propane/LP (Resistant to sulfur compounds)

⚠ CAUTION

Gloves are recommended when handling refractory and logs to prevent skin irritation from loose fibers. Logs are fragile; handle with care.

C. Inspect Appliance and Components

- Carefully remove the appliance and components from the packaging.
- Attached to the appliance are tags identifying the manufacturer, serial number, model number. Including log set size, BTU/hr ratings and gas type.
- Review the attached tags before proceeding. Ensure that all minimum fireplace dimension requirements are achieved using Figure 3.1.
- Ensure the gas type provided in the fireplace coincide with the gas type marked on the tag.
- Logs are packaged and sold separately.
- Report to your dealer any parts damaged in shipment.
- Read all of the instructions before starting the installation. Follow these instructions carefully during the installation process to ensure maximum safety and benefit.

⚠ ***WARNING! Risk of Fire or Explosion!*** *Damaged parts could impair safe operation.* ***DO NOT*** *install damaged, incomplete or substitute components. Keep appliance dry.*

Hearth & Home Technologies disclaims any responsibility for, and the warranty will be voided by, the following actions:

- Installation and use of any damaged appliance.
- Modification of the appliance.
- Installation other than as instructed by Hearth & Home Technologies.
- Installation and/or use of any component part not approved by Hearth & Home Technologies.

Any such action may cause a fire hazard

⚠ ***WARNING! Risk of Fire, Explosion or Electric Shock! DO NOT*** *use this appliance if any part has been under water. Call a qualified service technician to inspect the appliance and to replace any part of the control system and/or gas control which has been under water.*

D. Check Parts

Verify contents to ensure you have received all parts. You should have the following:

- Gas Log Burner Assembly
- Grate Assembly
- On/Off Switch and Wire Harness
- Remote Control (IPI models only)
- (2) Bags of Lava Rock & (1) Bag Rock Wool
- Installation / Owner's Manual
- Fastener Pack w/ (2) Anchor Screws
- Flex Line & Pipe Fittings

⚠ WARNING

Do not install the appliance:

- **Where curtains, furniture, clothing, or other flammable objects are less the 36 inches from the front of the appliance.**
- **In high traffic areas.**
- **In windy or drafty areas.**

E. Minimum Hearth Dimensions

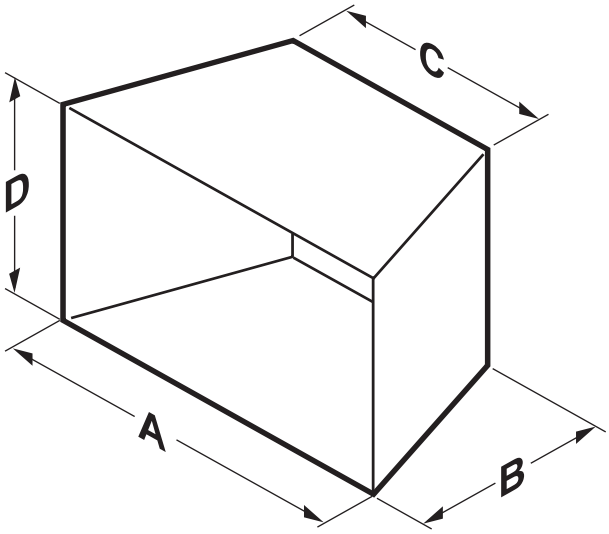

Model	A	B	C	D
NB18 with 18” logs	26.00” (660 mm)	14.50” (368 mm)	20.25” (514 mm)	17.00” (432 mm)
NB24 with 24” logs	29.00” (737 mm)	14.50” (368 mm)	23.25” (591 mm)	17.00” (432 mm)
NB24 with 30” logs	33.00” (838 mm)	14.50” (368 mm)	25.25” (641 mm)	17.00” (432 mm)

Figure 3.1 Minimum Hearth Dimensions

F. Restrictive Barriers

⚠ WARNING

Barriers such as the bottom of a glass door frame placed in front of a gas log set can change the air flow characteristics of the fireplace, which in turn can cause the appliance to overheat and malfunction.

The following are guidelines for placing a gas log set in a fireplace that has a restrictive barrier. See Figure 3.2.

NOTE: Non-combustible material such as refractory brick may be used to line the floor of the fireplace in order to raise the height of the gas log set in relation to a restrictive barrier. If the appliance is raised, the minimum height dimension shown in Figure 3.1 must be met or exceeded.

NOTE: This gas log set is supplied with a remote receiver, a restrictive barrier may reduce the battery life by increasing the ambient temperature inside the fireplace.

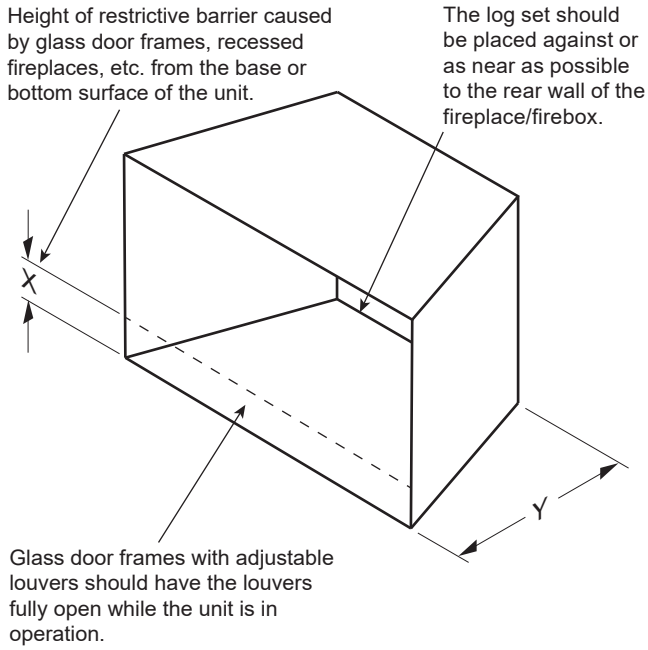

Height of Restriction (X)	Minimum Depth of Fireplace (Y)
No Restriction	14.50”
0” to 3” Restriction	16.50”
Greater than 3” Restriction	*

Figure 3.2 Restrictive Barriers

**Any barrier greater than 3” placed in front of the gas log set is not recommended by the manufacturer.*

G. Adequate Combustion Ventilation Air

WARNING

This appliance needs fresh air for ventilation to run properly. This appliance is equipped with an ODS (Oxygen Depletion Sensor) which will shut down the appliance if adequate fresh air is not available.

This appliance shall not be installed in a confined space or unusually tight construction unless provisions are provided for adequate combustion and ventilation air.

The National Fuel Gas Code, (ANSI Z223.1/NFPA54), defines a confined space as a space whose volume is less than 50 cubic feet per 1,000 BTU per hour (4.8m^3 per kw) of the aggregate input rating of all appliances installed in that space. Rooms communicating directly with the space in which the appliances are installed, through openings not furnished with doors, are considered a part of a confined space. See Figure 3.3

Unusually tight construction is defined as construction where:

- Walls and ceilings exposed to the outside atmosphere have a continuous water vapor retarder with a rating of 1 perm (6 x 1011 kg per pa/sec-m2) or less with openings gasketed or sealed, and
- Weather stripping has been added to windows and doors, and
- Caulking or sealants are applied to areas such as joints around window and door frames, between sole plates and floors, between wall-ceiling joints, between wall panels, at penetrations for plumbing, electrical and gas lines and other openings.

WARNING

If the area in which the heater may be operated is smaller than that defined as an unconfined space or if the building is of unusually tight construction, provide adequate combustion and ventilation air by one of the methods described in the National Fuel Gas Code, ANSI Z223.1/ NFPA 54, Air for Combustion and Ventilation, or applicable local codes.

Formula:
Appliance BTU rating / 1,000 x 50 = Min. Required Ft^3

Example:
40,000 / 1,000 x 50 = 2,000 Ft^3

Room Size Calculation:
(L1 + L2) x W x H = Ft^3

Example:
(15.5 + 12) x 12 x 8 = 2,640 Ft^3

2,640 Ft^3 Available > 2,000 Ft^3 Minimum Required

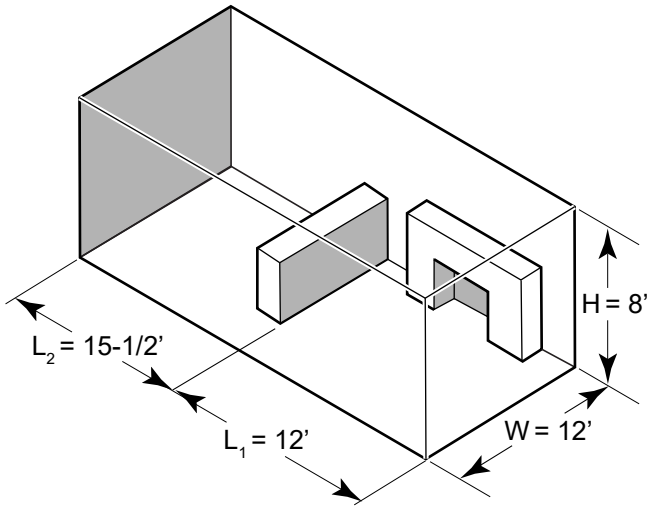

Figure 3.3 Confined Space Example

H. Negative Pressure

Negative pressure results from the imbalance of air available for the fireplace to operate properly. Possible causes for this imbalance include:

- Exhaust fans (kitchen, bath, etc.)
- Range hoods
- Combustion air requirements for furnaces, water heaters and other combustion appliances
- Clothes dryers
- Location of return-air vents to furnace or air conditioning
- Imbalances of the HVAC air handling system
- Upper level air leaks: recessed lighting, attic hatch opening, duct leaks.

4 Important Safety Information

A. Appliance Safety

WARNING! DO NOT operate appliance before reading and understanding operating instructions. *Failure to operate appliance according to operating instructions could cause fire or injury.*

DANGER



- Keep children away.
- CAREFULLY SUPERVISE children in same room as appliance.
- Alert children and adults to hazards of high temperatures.

High temperatures may ignite clothing or other flammable materials.

- Clothing, furniture, draperies, and other flammable materials must not be placed on or near the appliance.

Young children should be carefully supervised when they are in the same room as the appliance. Toddlers, young children and others may be susceptible to accidental contact burns.

- A physical barrier is recommended if there are at risk individuals in the house.
- To restrict access to a appliance, install an adjustable safety gate to keep toddlers, young children and other at risk individuals out of the room and away from hot surfaces.
- Install a switch lock or a wall/remote control with child protection lockout feature.
- Keep remote controls out of reach of children.
- Never leave children alone near a hot appliance, whether operating or cooling down.
- Teach children to NEVER touch the appliance.
- Consider not using the appliance when children will be present.

Contact your dealer for more information, or visit: www.hpba.org/safety-information.

To prevent unintended operation when not using your appliance for an extended period of time (summer months, vacations, trips, etc):

- Remove batteries from remote controls.
- Turn off gas shutoff valve.

Clear Space

WARNING! DO NOT *place combustible objects in front of the appliance. High temperatures may start a fire. See Figure 4.1.*

Avoid placing candles, electronics and other heat-sensitive objects on mantel or hearth. Heat may damage these objects.

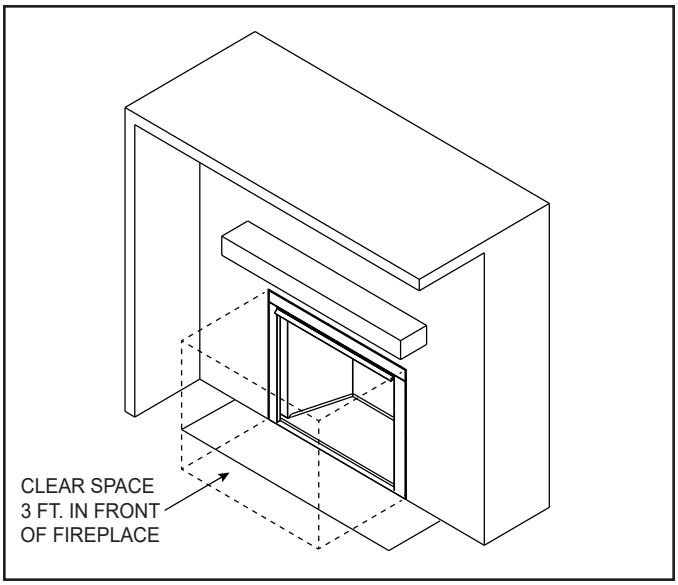

Figure 4.1 Clear Space Requirements

Over Firing

The appliance is considered to be over firing if the flames are contacting the top of the firebox. Call a qualified service technician to service the appliance.

B. General Operating Parts

Figure 4.2 references the general operating parts of a typical installation.

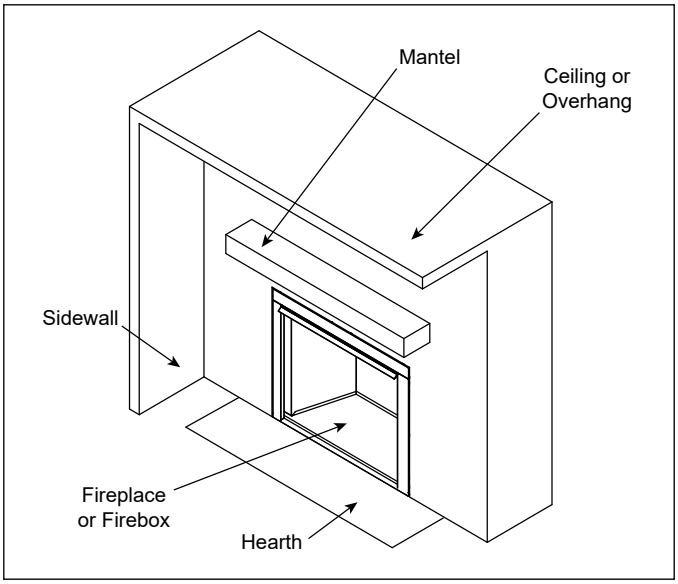

Figure 4.2 General Operating Parts

⚠ WARNING

- **Any change to this appliance or its controls can be dangerous.**
- **Improper installation or use of the appliance can cause serious injury or death from fire, burns, explosion or carbon monoxide poisoning.**
- **Do not allow fans to blow directly into the fireplace. Avoid any drafts that alter burner flame patterns.**
- **Do not use a blower insert, heat exchanger insert or other accessory, not approved for use with this appliance.**

Additional Safety information:

- WARNING: Any change to this appliance or its controls can be dangerous.
- NEVER burn solid fuels in a fireplace where a unvented appliance is installed.
- CARBON MONOXIDE POISONING: Early signs of carbon monoxide poisoning are similar to the flu with headaches, dizziness and/or nausea. If you have these signs, obtain fresh air immediately. Have the appliance serviced as it may not be operating properly.
- An unvented appliance having an input rating of more than 10,000 Btu per hour shall NOT be installed in a bedroom or bathroom.
- Correct installation of the logs, proper location of the appliance, and annual cleaning are necessary to avoid potential problems with sooting. Sooting, resulting from improper installation or operation, can settle on surfaces outside the fireplace. Refer to log placement instructions for proper installation.
- Cleaning: To prevent malfunction and/or sooting, appliance should be cleaned before use and at least annually by a professional service person. More frequent cleaning may be required due to excessive lint from carpeting, bedding materials, etc. It is imperative that control compartments, burners and circulating air passageways be kept clean.
- Any safety screen removed for servicing an appliance, MUST be replaced prior to operating.
- Avoid any drafts that alter burner flame patterns. Do NOT allow fans to blow directly into fireplace. Do NOT place a blower inside burn area of firebox. Ceiling fans may create drafts that alter burner flame patterns. Sooting and improper burning will occur.
- Keep room area clear and free from combustible materials, gasoline and other flammable vapors and liquids.
- Avoid the use of candles, incense, oil lamps, etc. while the appliance is in operation. These products produce a residue in the air that creates a soot like substance. Burning candles while the appliance is operating magnifies the problem. It should be noted that candles, in general, produce soot. The amount of time burned and the quantity of candles burned will determine the amount of soot produced and deposited.
- Water vapor is a by-product of gas combustion. An unvented appliance produces approximately 1 ounce (30 ml) of water for every 1,000 Btu's (.29 kW) of gas input per hour.
- An unvented appliance should be used for supplemental heat, rather than as a primary heat source. In most supplemental applications, water vapor does not create a problem and may enhance the low humidity atmosphere experienced during cold weather.
- In applications with extremely tight construction, additional mechanical ventilation is recommended

The following steps will help ensure that water vapor does not become a problem:

1. Be sure the appliance is properly sized for the application, including adequate combustion air.
2. If high humidity is experienced, a dehumidifier may be used to help lower the water vapor content of the air.
3. Do not use an unvented appliance as the primary heat source.

5 Clearances

A. Clearance to Combustibles

WARNING

The dimensions shown in Figures 5.1 through 5.6 and defined in the fireplace manufacturer's instructions are minimum clearances to maintain when installing this appliance. Left and right clearances are determined when facing the front of the appliance.

When appliance is installed into a ventless firebox, minimum clearances, as specified by the ventless firebox manufacturer, MUST be met.

Follow these instructions carefully to ensure safe installation. Failure to follow instructions exactly can create a fire hazard.

Sidewall and Ceiling Clearances

Sidewalls must be a minimum of 9 inches (229 mm) from the side of the fireplace opening.

Ceiling must be a minimum of 42 inches (1067 mm) from the top of the fireplace opening.

See Figure 5.1

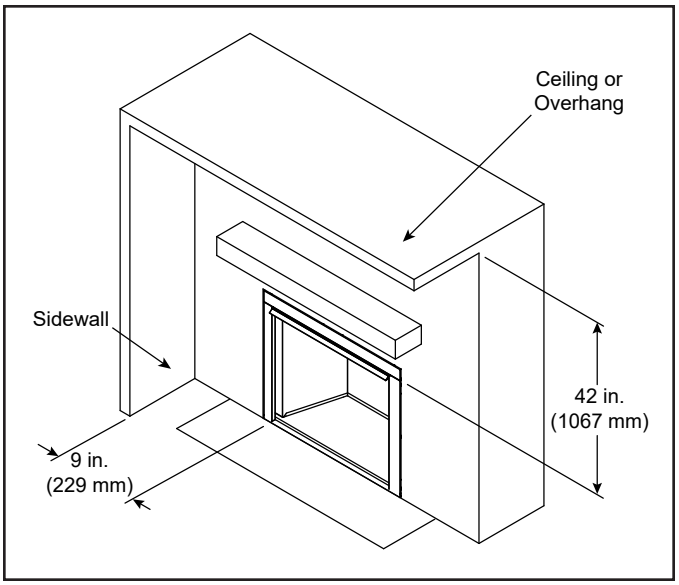

Figure 5.1 Sidewall and Ceiling Clearances

Wall Clearances Above the Fireplace

Clearances above the fireplace opening MUST meet the following requirements:

- Non-Combustible materials are required above the fireplace opening. See Figure 5.2.
- Non-Combustible materials such as slate and marble MUST be a minimum of 1/2" thick.
- A sheet metal covering MUST have Non-Combustible material behind it.

Note: An optional adjustable hood is available and may be installed to reduce clearances of both wall and mantel clearances.

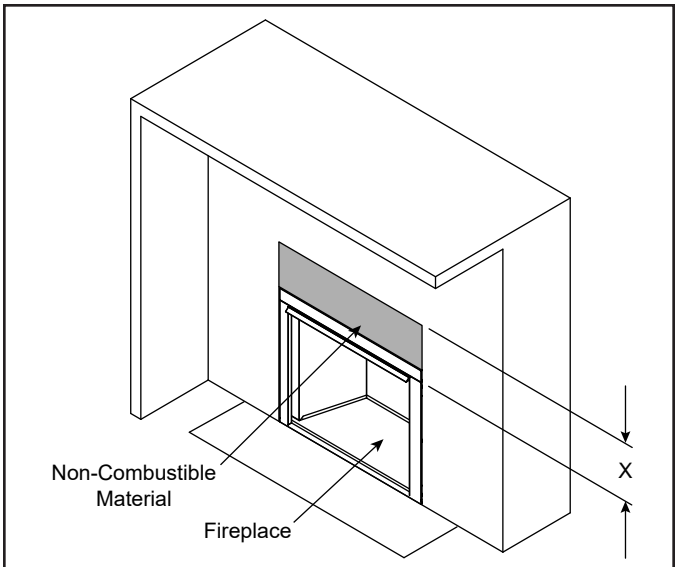

Non-Combustible Measurement (X)	Optional Hood Required
12" or more	No
8" to 12"	Yes
Less than 8"	Not Allowed

Figure 5.2 Wall Clearances Above the Fireplace

***IMPORTANT**: If these minimum clearances cannot be met, the appliance MUST be installed and operated as a vented appliance, with the chimney and damper open.*

Combustible Mantel Clearances

Vertical clearance to a combustible mantel located above the fireplace opening MUST meet the minimum requirements as shown in Figure 5.3.

Note: An optional adjustable Hood is available and may be installed to reduce clearances of both wall and mantel clearances.

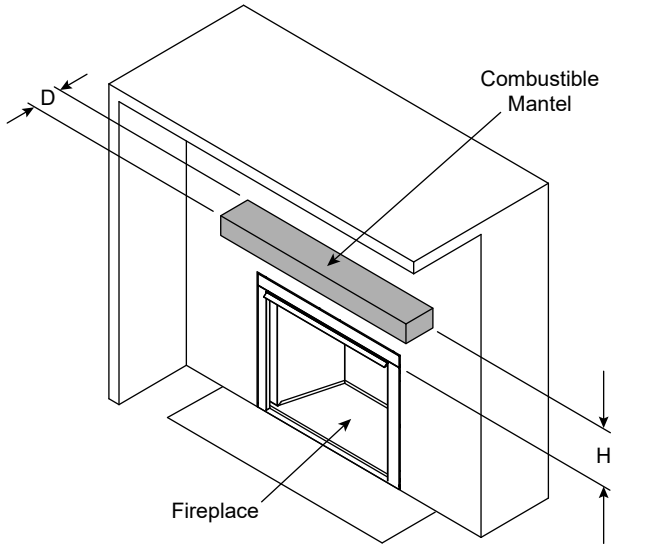

	Minimum Required Combustible Mantel Height (H)	
Mantel Depth (D)	Without Optional Hood	With Optional Hood
3”	14”	8”
6”	17”	11”
9”	20”	14”
12”	23”	17”

Figure 5.3 Combustible Mantel Clearances

***IMPORTANT**: If these minimum clearances cannot be met, the appliance MUST be installed and operated as a vented appliance, with the chimney and damper open.*

Combustible Floor Clearances

Vertical clearance from fireplace opening to combustible flooring is 0 inches, excluding carpet or vinyl. See Figure 5.4.

Carpet or vinyl is NOT allowed within 14 inches from the face of the fireplace.

Note: For installations with vinyl flooring, special clearance recommendations apply. See Vinyl Flooring section below.

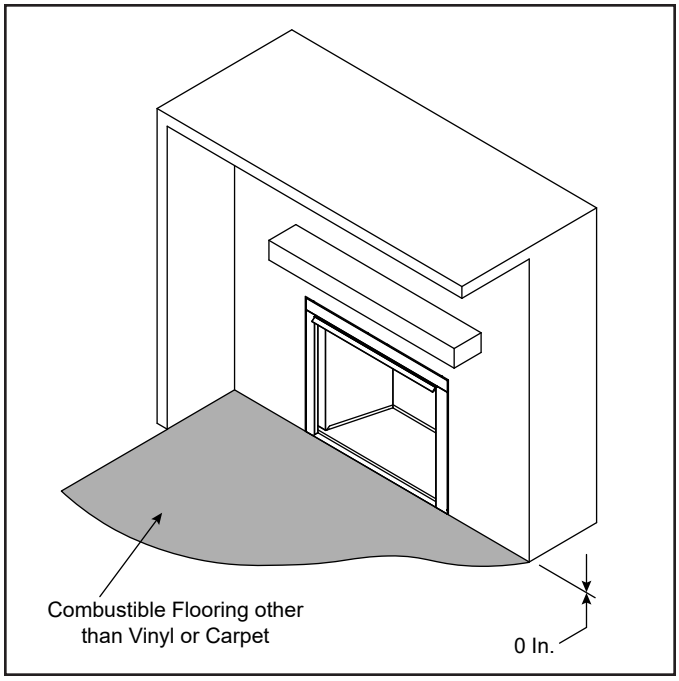

Figure 5.4 Combustible Flooring

Vinyl Flooring

Vinyl Flooring is sensitive to heat. A 14 inch minimum depth hearth extension, OR installing the fireplace at a height of 12 inches from the firebox opening to the floor is recommended when using vinyl flooring up to the wall. See Figures 5.5 & 5.6.

NOTICE: Clearances that do not meet the minimum guidelines could result in damage or buckling to the vinyl flooring and is done at the installer's risk.

Hearth and Home Technologies does not recommend adhesive based vinyl flooring due to thermal expansion. Floating style flooring can be used, but will reach temperatures up to 110°F in a room with ambient temperature of 70°F. Consult flooring specifications to ensure compatibility.

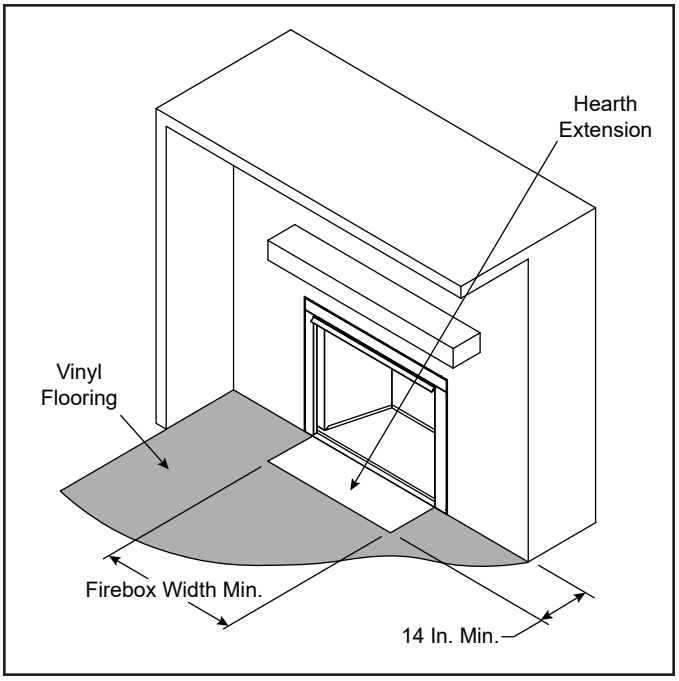

Figure 5.5 Vinyl Flooring

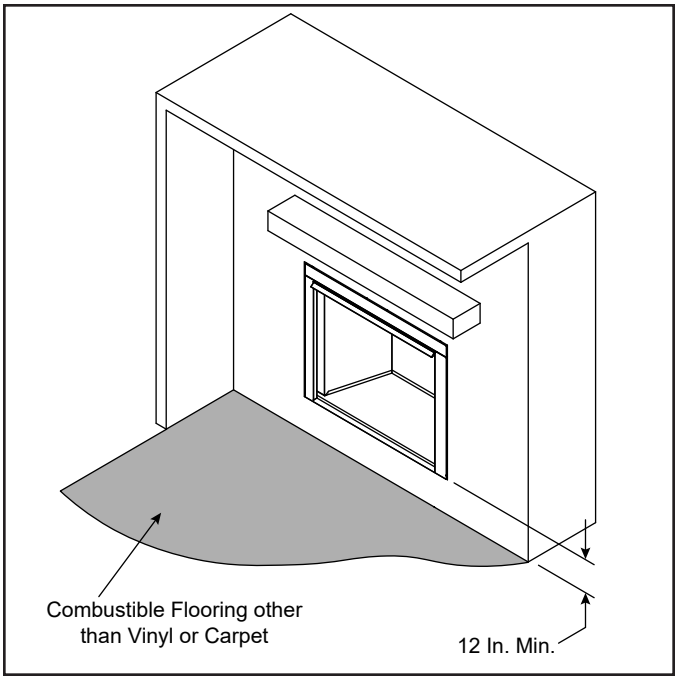

Figure 5.6 Vinyl Flooring

6 Fireplace Preparation

A. Installation Information

BEFORE INSTALLING THE APPLIANCE:

- Turn off gas supply to masonry fireplace, factory-built fireplace or ventless firebox enclosure
- Have the fireplace floor and chimney professionally cleaned to remove ash, soot, creosote or other obstructions. Have this cleaning performed annually after installation.
- Seal any fresh air vents or ash clean-out doors located on floor or wall of fireplace. If not, drafting may cause pilot outage or sooting. Use a heat-resistant sealant.

Note: This appliance is approved for installation as an "unvented" gas log set or as a "vented" gas log set. For additional appliance listing information see Section 2A of this manual.

B. Unvented Installations

⚠WARNING

This appliance is for installation only in a solid-fuel burning masonry or UL127 factory-built fireplace or in listed vent-free firebox. It has been design certified for these installations.

Exception: DO NOT install this appliance in a factory-built fireplace that includes instructions stating it has not been tested or should not be used with unvented gas logs.

This Gas-Fired Unvented Gas Log Type Room Heater is approved for installation into a CSA/ANSI Z21.91:20 listed Ventless Firebox Enclosure for Gas-Fired Unvented Gas Log Type Room Heaters, so long as the firebox hearth dimensions meet the minimum hearth dimensions listed in this manual.

C. Vented Installations

⚠WARNING

This appliance is for installation only in a solid-fuel burning masonry or UL127 factory-built fireplace. It has been design certified for these installations.

Damper Stop Installation

A damper stop is provided with this appliance. The damper stop MUST be installed to prevent full closure of the fireplace damper blade and provide a minimum flue opening. See Figures 6.1 and 6.3; Tables 6.2 and 6.4.

Note: Should the stop not fit, or provide the required permanent opening from the table have the damper blade cut to provide minimum permanent opening or a permanent stop installed.

Factory-Built Fireplace: Position damper stop on the top half of the damper blade, slide stop towards the center of the damper blade to create an interference with the bead on the flue collar and tighten bolt. Either side of the damper blade is acceptable. See Figure 6.1.

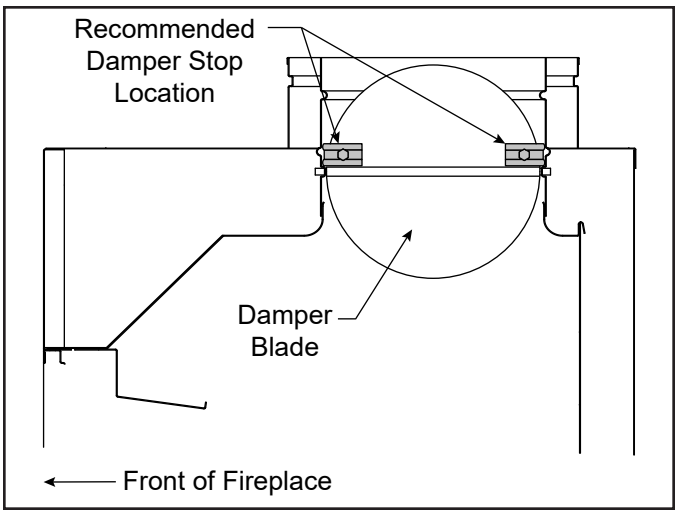

Figure 6.1 Factory-Built Fireplace

Free opening area of chimney damper for venting combustion products (factory-built fireplaces)

Chimney Height	NB18NV-B NB18PV-B NB18NIF-B NB18PIF-B	NB24NV-B NB24PV-B NB24NIF-B NB24PIF-B
10 Ft.	16.6 in^2	22.1 in^2
15 Ft.	12.6 in^2	17.3 in^2
20 Ft.	10.8 in^2	14.5 in^2
25 Ft.	9.6 in^2	12.6 in^2
30 Ft.	9.1 in^2	11.3 in^2
35 Ft.	8.0 in^2	10.8 in^2
40 Ft.	7.5 in^2	10.2 in^2

Table 6.2 Minimum Open Area Factory-Built Fireplaces

Masonry-Built Fireplace: Position damper stop over the lip of the damper, and tighten bolt until the clamp is securely attached to the damper. See Figure 6.3.

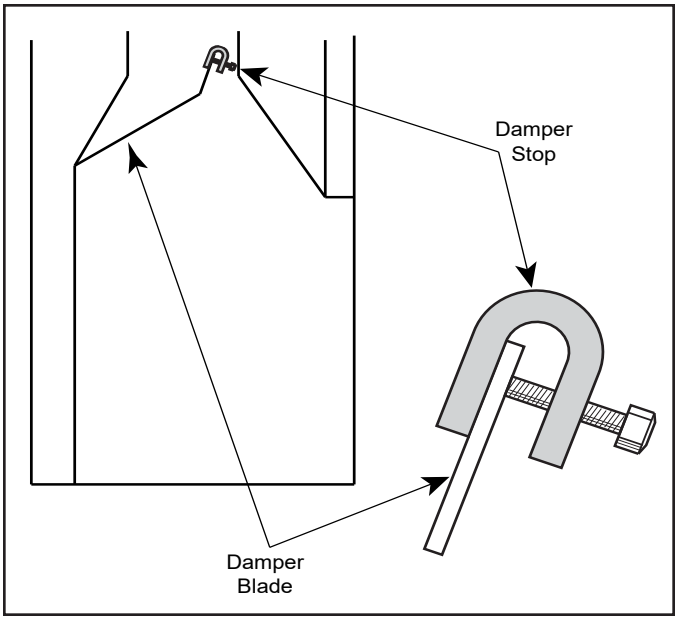

Figure 6.3 Masonry-Built Fireplace

Free opening area of chimney damper for venting combustion products (masonry-built fireplaces)

Chimney Height	NB18NV-B NB18PV-B NB18NIF-B NB18PIF-B	NB24NV-B NB24PV-B NB24NIF-B NB24PIF-B
6 Ft.	25.7 in^2	33.8 in^2
8 Ft.	23.7 in^2	31.2 in^2
10 Ft.	21.7 in^2	28.7 in^2
15 Ft.	19.9 in^2	26.1 in^2
20 Ft.	18.5 in^2	23.7 in^2
30 Ft.	16.9 in^2	21.6 in^2

Table 6.4 Minimum Open Area Masonry-Built Fireplaces

⚠ WARNING

Improper installation or use of the appliance can cause serious injury or death from fire, burns, explosion or carbon monoxide poisoning.

For Massachusetts Residents Only:
Installation of this vented gas log set in the Commonwealth of Massachusetts requires the damper be permanently removed or welded in the fully open position. In addition, a naturally vented gas log may not be installed in a bedroom or bathroom in the Commonwealth of Massachusetts.

⚠ WARNING

The fireplace and gas logs function as a system. If the fireplace is spilling into the room (check with a match or smoke stick), reposition the damper clamp until a positive draft is obtained, by opening the damper. If negative pressure in the home prevents having a positive draft contact your dealer.

7 Gas Information

⚠WARNING



Risk of Fire! Risk of Explosion! Risk of Asphyxiation!

Follow all instructions and warnings for installing and servicing gas line.

- **Gas line installation and service must be performed by a qualified installer or licensed plumber in accordance with all applicable codes for the installation location (NFPA 54 / ANSI Z223.1, the current International Fuel Gas Code, or CAN/CSA B149 in Canada) (In the Commonwealth of Massachusetts installation must be performed by a licensed plumber or gas fitter).**
- **Check all fittings and connections by means of a listed combustible gas detector, a noncorrosive leak detection fluid, or other approved leak detection method. DO NOT use open flame.**

⚠WARNING



Risk of Fire! Risk of Explosion!

Pressure exceeding 1/2 PSIG (14 in. w.c. / 3.5 kPa) will damage gas valve control.

- **Disconnect appliance and its manual shutoff valve BEFORE line pressure testing.**
- **Cap outlet on piping system at appliance connection BEFORE line pressure testing.**
- **Connect appliance AFTER confirming piping system pressure is equal or less than 1/2 PSIG (14 in. w.c. / 3.5 kPa).**

A. Fuel Type

- Make sure the appliance is compatible with available gas types.
- Field conversion is **NOT** permitted.

B. Gas Pressure

- Install pressure regulator upstream of gas valve if line inlet pressure exceeds 1/2 PSIG.
- Recommended inlet pressure for optimal appliance performance: 7.0 in. w.c. (NG) 12.0 in. w.c. (Propane).
- Verify inlet pressure is within specified range, including when other household gas appliances are operating.
- Pressure requirements when in operation are:

	Natural Gas	Propane (LP)
Inlet Minimum	5.0” W.C.	11.0” W.C.
Inlet Maximum	10.0” W.C.	13.0” W.C.
Manifold Pressure	3.5” W.C.	10.0” W.C.

Table 7.1 Gas Pressures

Note: A listed (and Commonwealth of Massachusetts approved) 1/2 in. (13 mm) T-handle manual shut-off valve and flexible gas connector are connected to the 1/2 in. (13 mm) control valve inlet.

- **If substituting for these components, please consult local codes for compliance.**

C. Gas Connection and Gas Line Purging

⚠WARNING



Risk of Fire! Risk of Explosion!

Gas buildup during line connection and purging could ignite.

- **Support gas control when attaching pipe to prevent bending gas line.**
- **Gas line installation and purging of the gas fuel line MUST be preformed by a qualified service technician or a licensed plumber in accordance with the applicable gas code for the installation location (NFPA 54 / ANSI Z223.1, the current International Fuel Gas Code, or CAN/CSA B149 in Canada).**
- **Use a listed combustible gas detector, a noncorrosive leak detection fluid, or other approved leak detection method to check all fittings and connections for gas leaks before lighting the appliance.**
- **Ensure Ventilation**
- **Eliminate ignition sources, such as sparks or open flames**

- The gas inlet connection is on the right rear side of the appliance. To connect from the opposite side, route the appliance gas connector around the back of the appliance.
- Pipe incoming gas line into firebox. See Figure 7.1.
- The gap between supply piping and gas access hole may be caulked with caulk with a minimum of 300ºF continuous exposure rating or stuffed with non-combustible, unfaced insulation to help prevent cold air infiltration.
- Ensure that gas line does not come in contact with outer wrap of the firebox/fireplace. Follow local codes.
- A small amount of air will be in the gas supply line and must be purged. Light the appliance to allow air to purge through the pilot assembly.

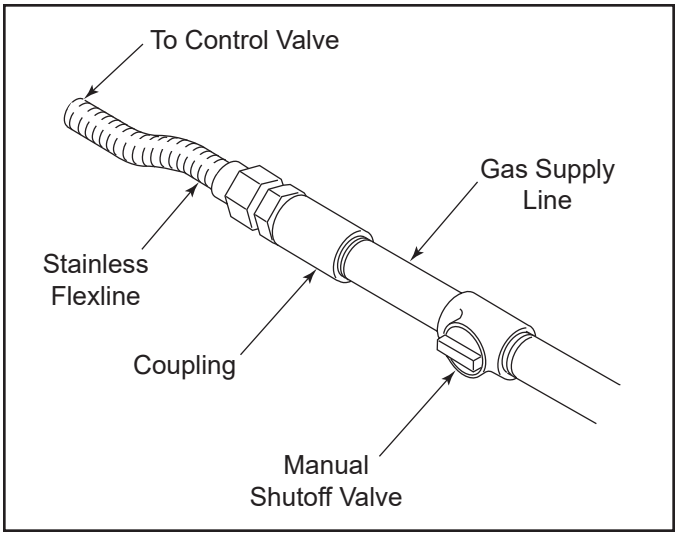

Figure 7.1 Gas Connection

D. Verify Gas Pressure

The valve regulator controls the burner pressure. Gas pressure must be verified at both the inlet and outlet pressure taps.

1. Turn captured screw counterclockwise two or three turns. See Figure 7.2.
2. Place tubing from pressure gauge over test port.
3. After taking pressure readings, be sure and turn captured screw clockwise firmly to re-seal. Do not over torque.
4. Check for gas leaks.

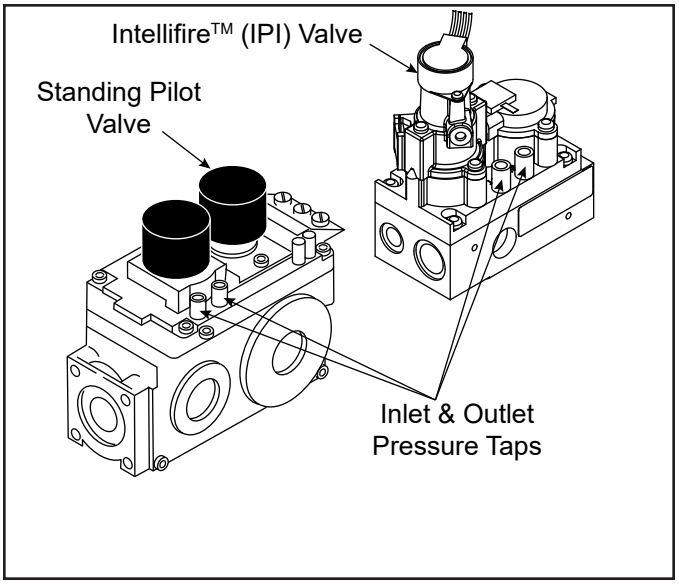

Figure 7.2 Pressure Taps

8 Electrical Information

A. General Information

WARNING

Risk of Shock or Explosion! DO NOT wire 110-120 VAC to the control valve. Incorrect wiring will damage the controls.

This appliance does NOT require 110-120 VAC for operation. If the fireplace or firebox the appliance is installed into is electrically wired, it MUST be wired and grounded in accordance with local codes or, in the absence of local codes, with **National Electric Code ANSI/NFPA 70-latest edition.**

This appliance may be used with a wall switch, or optional wall mounted thermostat and/or a remote control.

Note: The use of a thermostat is prohibited in vented installations.

WARNING! Risk of Shock! *Label all wires prior to disconnection when servicing controls. Wiring errors can cause improper and dangerous operation. Verify proper operation after servicing.*

WARNING! Risk of Shock! *Replace damaged wire with type 105ºC rated wire. Wire must have high temperature insulation.*

B. Standing Pilot Models

The standing pilot millivolt valve is a self-powered combination gas control that does NOT require 110-120 VAC to operate.

Optional Switch or Thermostat

- Thermostat installation is allowed on unvented applications only.
- Use a maximum 15 ft., 18 AWG, two conductor wire.
- Connect to the wall switch/thermostat wires to valve TH and TP/TH terminals.

Optional Remote Control

- Position receiver in a suitable location, not adversely effected by high heat. See instructions included with the remote kit.
- Connect to the receiver wires to valve TH and TP/TH terminals.
- Receiver wire connections are equipped with a piggy back terminal. This allows for use of both a remote and optional wall switch.
- Heat reduces battery life. You can protect the receiver and extend battery life by mounting receiver in a wall or other location outside the fireplace.

WARNING! *Do NOT allow remote wires to touch the grate, burner or other metal surfaces.*

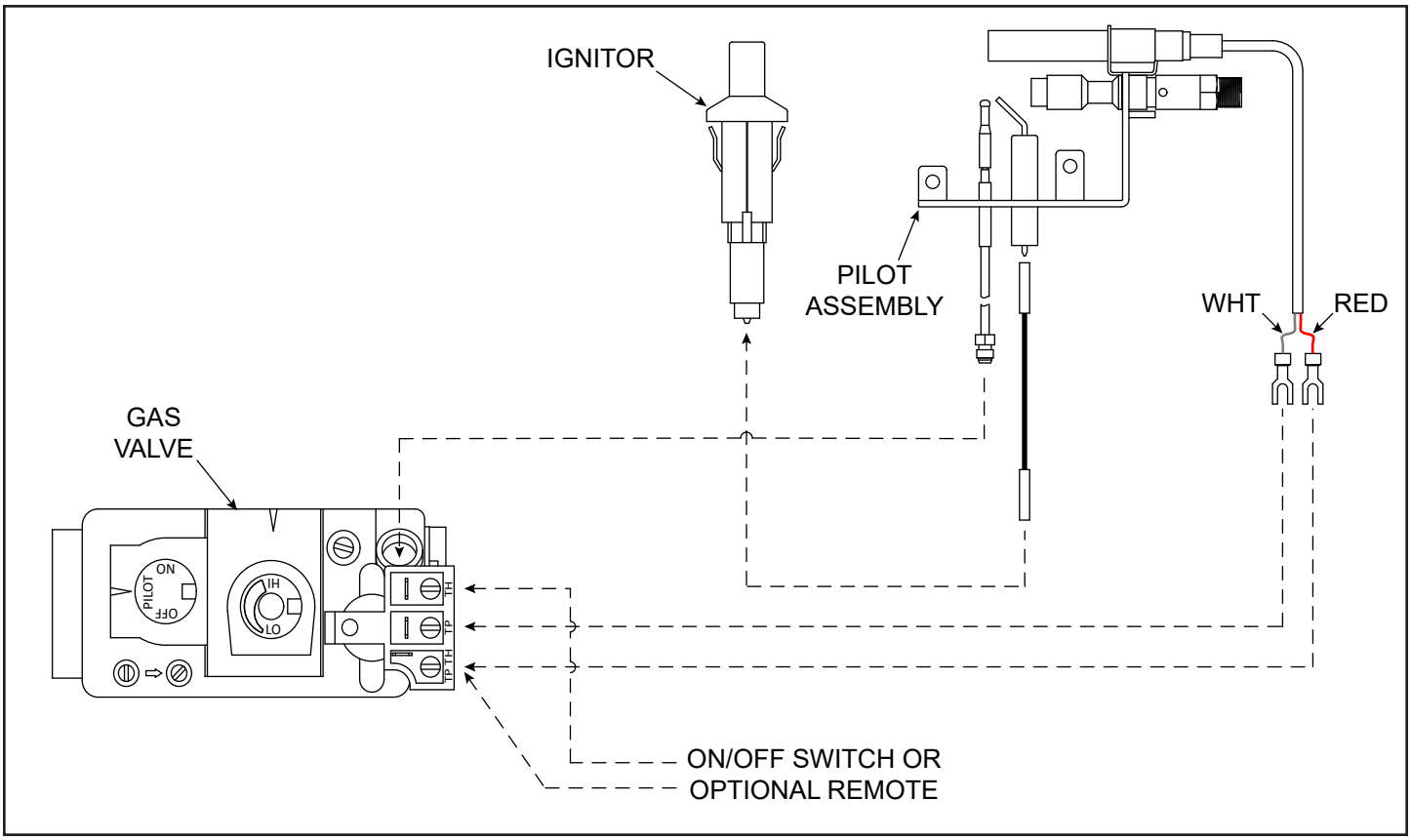

Figure 8.1 Standing Pilot Wiring

C. Intellifire™ Plus (IPI) Models

The Intellifire™ Plus intermittent pilot system operates on 6 VDC. The system comes standard with a integrated battery pack that holds (4) AA batteries and does NOT require 110-120 VAC to operate.

Remote Control (RC300)

- Remote Control Kit provided as a standard feature with IPI models.

Note: Battery life will be shortened if the flame adjustment feature on the remote control is used frequently.

Control Module Operation

The control module has an ON/OFF/REMOTE selector switch that must be set. See Figure 8.2.

- OFF Position: Appliance will ignore all commands from a wall switch or remote. The unit should be in the OFF position during installation, service, battery installation, and in the event that the control goes into LOCK-OUT mode as a result of an error code.
- ON Position: Appliance will ignite and run continuously at the high flame setting. This mode is primarily used for initial set-up.
- REMOTE Position: Appliance will execute commands from a wired wall switch or remote control. If using a wired wall switch, the appliance will ignite and run continuously at the high flame setting.

See installation and operating instructions supplied with the Remote Control Kit for detailed instructions.

Note: If you intend to use both a wired wall switch and the remote control to operate your appliance, the wall switch will override any commands given by the remote.

Safety Shutdown Feature

The control module has safety feature that automatically shuts down the appliance after 9 hours of continuous operation without receiving a command from the RC300 remote.

Control Module Reset

The Control Module may lock-out under certain conditions. When this occurs, the appliance will not respond to commands. The module will go into lock-out mode by emitting three audible beeps, then continuously displaying a RED/GREEN error code at the status indicator LED.

Reset using control module selector switch:

1. Locate the module selector switch. See Figure 8.2.
2. Set the module selector switch to the OFF position.
3. Wait 5 minutes to allow possible accumulated gas to clear.
4. Set the module selector switch to the REMOTE position.
5. Use the remote or wall switch to start the appliance.

Reset using battery pack reset switch:

1. Locate the reset switch on battery pack cover. See Figure 8.3.
2. Press and hold the reset switch for 15 seconds to reset the control module.
3. Wait 5 minutes to allow possible accumulated gas to clear.
4. Use the remote or wall switch to start the appliance.

⚠ ***WARNING! Risk of Explosion! DO NOT*** *reset the module selector switch more than one time within a five minute time period. Gas could accumulate in firebox. Call a qualified service technician.*

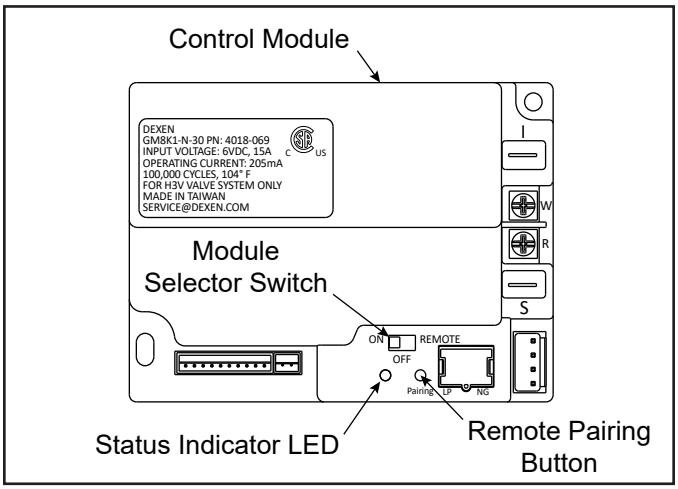

Figure 8.2 Control Module

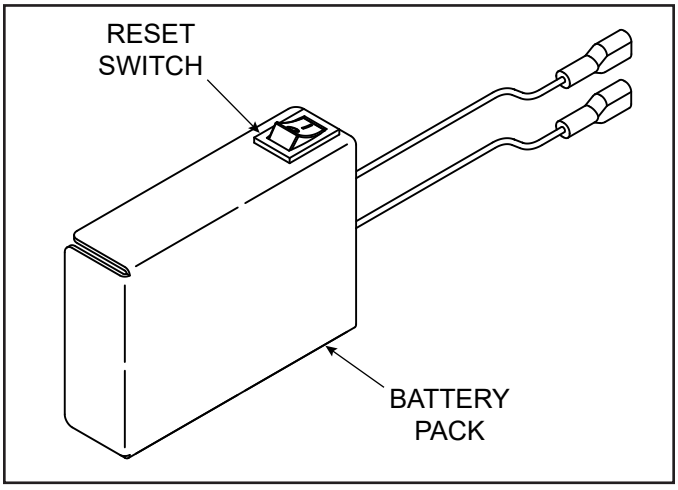

Figure 8.3 Battery Pack Reset Switch

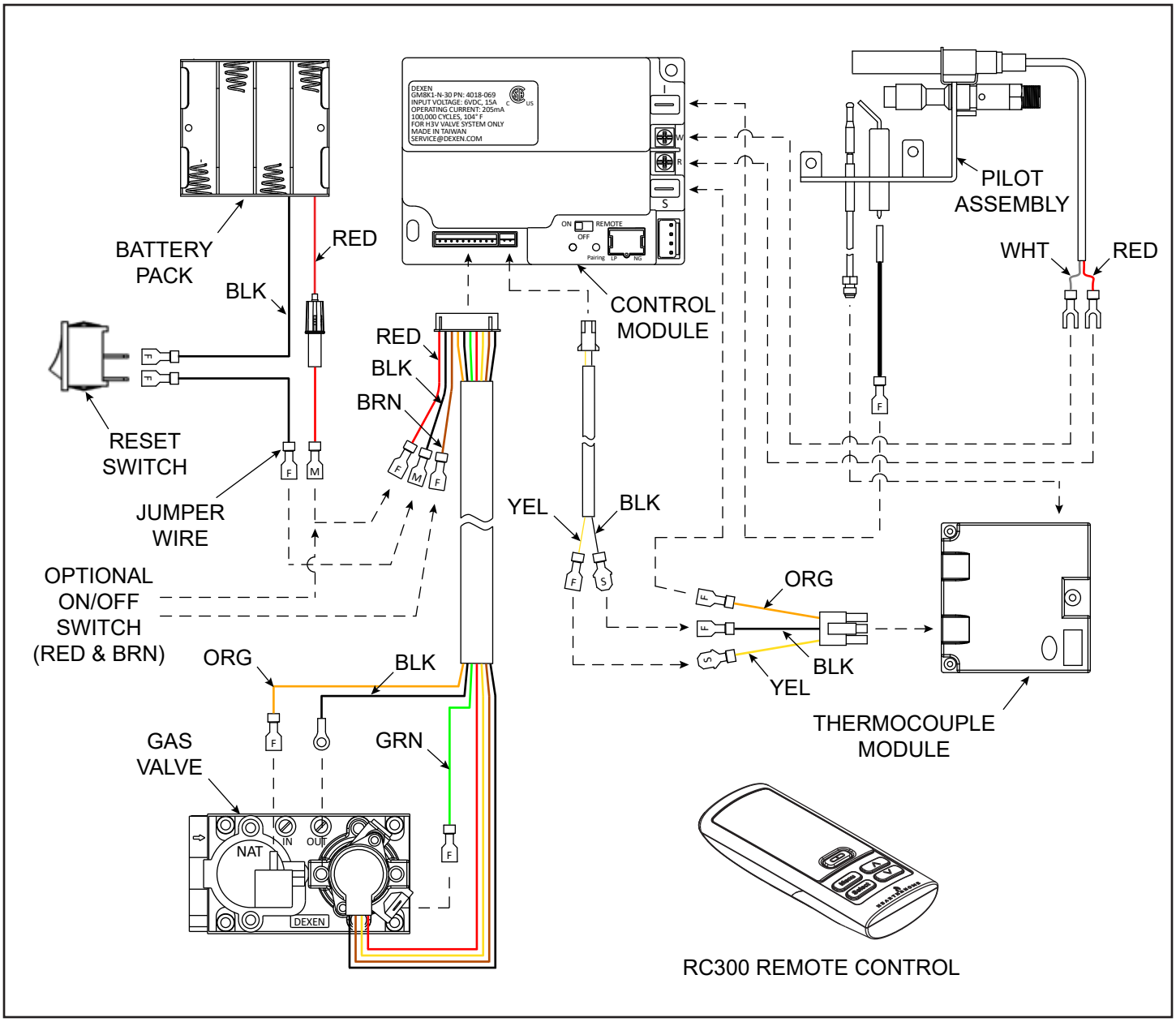

Figure 8.4 Intellifire™ Plus (IPI) Wiring

9 Appliance Installation and Set-up

⚠WARNING

You must secure the appliance to the fireplace floor. If not, the entire appliance may move when adjusting the controls. Movement of appliance may cause shifting of the logs which can lead to sooting and improper burning.

A. Position and Secure Appliance

The appliance is assembled with the gas controls installed at the factory, and is designed to connect the 3/8" supply line before making final placement inside the fireplace.

1. Remove and discard shipping brackets supplied on burner. See Figure 9.1.
2. Place the appliance towards the rear and center of the fireplace and connect the gas line.
3. Tighten incoming gas connection. Follow instructions in section 7.C Gas Connection to check for gas leaks.
4. Center the appliance in the fireplace. Make certain the front feet of the grate sit inside the front edge of the fireplace.
5. Once the appliance is positioned correctly, side to side and front to back, mark the mounting hole positions on the fireplace floor. See Figure 9.1 for mounting hole locations.
6. Drill (2) 5/32" diameter holes approximately 1-1/2" deep.
7. Anchor the appliance to the fireplace floor using the screws provided.

Note: Preventing unintended movement of the appliance is essential to proper operation of the appliance.

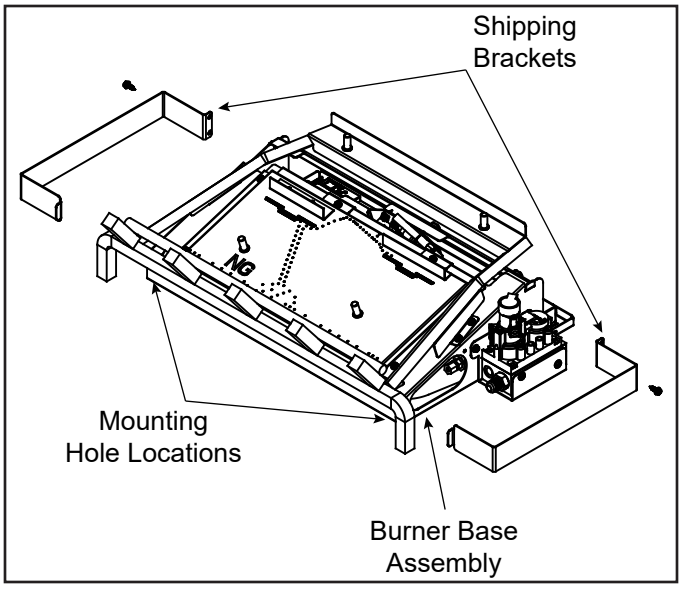

Figure 9.1 Mounting Holes

B. Switch or Remote Install (Standing Pilot)

Appliances equipped with a standing pilot ignition system are shipped standard with a decorative On/Off Switch Log. An optional battery powered remote control is available to purchase separately.

1. Connect the On/Off Switch and/or Remote Receiver to appliance gas control valve as shown in Figure 8.1.
2. Position On/Off Switch Log and/or Remote Control Receiver in a convenient location, which allows for safe operation of the appliance and replacement of batteries, as necessary.

C. Remote Installation (Intellifire™ Plus)

Intellifire™ Plus (IPI) Models are shipped standard with an RC300 Remote Control.

Programming the RC300 to appliance Control Module:

1. On the Control Module, verify the ON/OFF/REMOTE switch is in the REMOTE position. Green LED light will blink three times and will beep once 5 seconds later when ready. See Figure 8.2.
2. Using a small item (such as a paper clip) press and release the PAIRING button located near the ON/ OFF/ REMOTE switch. See Figure 8.2.
3. The Control Module will beep once and LED will blink green for 10 seconds.
4. While the LED is blinking, press the POWER button on the Remote Control. The Control Module will beep twice to indicate that it has been successfully programmed.

Note: The RC300 will not be programmed if it's in STAND-BY mode. Press the ON/ OFF button twice to switch to IDLE mode.

Clearing the control memory:

1. To clear the Control Module memory, use a small item (such as a paper clip) to press and release the PAIRING button.
2. The Control Module will beep once and LED will blink green for 10 seconds.
3. DO NOT press any buttons on the remote during the ten seconds that the green LED blinks.
4. The memory has been cleared.

See installation instructions included with the remote control for detailed operational instructions on the RC300 multifunction remote control.

D. Log and Media Placement

Log Options:

This appliance has multiple log options to choose from. Logs are sold separately and are listed in Section 14.A of this manual.

For log and media placement instructions refer to the installation instructions supplied with the selected log set.

DO NOT:

- Add additional glowing embers (rock wool), use only the rock wool provided with the appliance.
- Pile the glowing embers too heavily on the pan.
- Cover the pilot with glowing embers.

Note: This appliance is designed to be operated with one of the optional log sets installed. Do NOT operate this appliance without a log set installed.

Decorative Volcanic Rock:

The volcanic rock may be placed evenly around the appliance, on the floor of the firebox. Be sure to avoid any areas on the burner itself.

DO NOT:

- Place decorative volcanic rock on the burner, pilot or logs.

Before installing logs, place mineral wool evenly over small burner ports. Avoid placing mineral wool on clusters of small ports that make yellow flames on the front and rear of the burner. Loosely apply nickel size pieces to allow the gas to flow through for proper burn and not to be obstructed. See Figure 9.2.

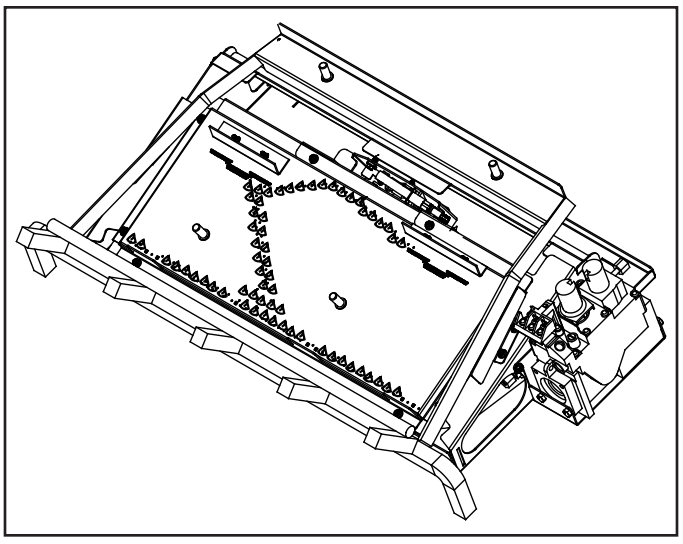

Figure 9.2 Mineral Wool Placement

⚠ WARNING

The positioning of the grate and logs is critical to the safe and clean operation of this appliance. Sooting and other problems may result if the logs are not properly and firmly positioned in the appliance.
Never add additional logs or embellishments such as pine cones, vermiculite or rock wool to the appliance. Only use the logs and rock wool supplied with the unit.
Failure to position the parts in accordance with diagrams on the following pages or failure to use only parts specifically approved for this appliance may result in property damage or personal injury.

E. Flame Appearance

Flames from the pilot and burner should be visually checked as soon as the appliance is installed. In addition, periodically check the flames visually during operation.

Check the Pilot Flame:

The pilot flame must always be present when the appliance is in operation. It should just touch the tip of the thermocouple for natural gas. If the pilot flame does not touch the thermocouple the main burner cannot function reliably. See Figure 9.3.

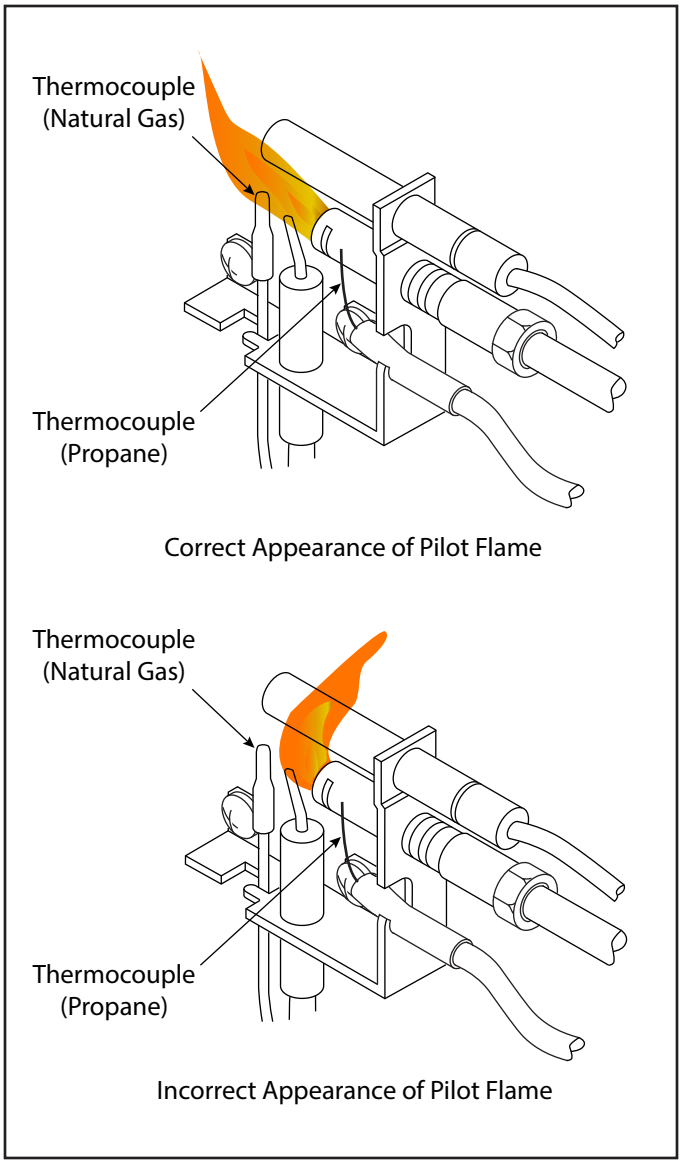

Figure 9.3 Pilot Flame

Main Burner Flame:

After 15 minutes of normal operation, the rear flames should be a random pattern of yellow flames, with glowing embers on the front of the main burner.

NOTE: The front flames and embers may be an opaque orange color during the burn off time.

After a 15 minute pre-heat period, observe all yellow flames to ensure there is no impingement with any log. If any yellow flame is contacting any log:

- Turn off log set and allow to cool.
- Remove all logs and carefully reinstall following log placement instructions precisely.
- Relight burner and check again for impingement of any flame on log.
- If flame impingement cannot be eliminated, contact your installer or dealer for assistance.

CAUTION: Flame impingement on logs may result in soot and possible property damage

F. Operating Instructions

Before operating this appliance for the first time, have a qualified service technician:

- Verify all shipping material have been removed from inside and/or underneath the gas log set.
- Review proper placement of logs.
- Ensure there are no gas leaks.

Caution: This appliance must NOT be operated with glass doors in the closed position.

Avoid any drafts that may alter burner flame patterns.

- Do NOT allow fans to blow directly into the fireplace.
- Do NOT place a blower inside the burn area of the firebox.
- Ceiling fans may create air currents that alter flame patterns. Sooting and improper burning may result.

To light your appliance, follow the instructions that match your ignition type (Standing Pilot or IPI). See Section 10 Lighting Instructions.

Appliances equipped with an Intellifire™ Plus (IPI) ignition system utilize battery power for normal operation and come standard with an integrated battery pack that holds (4) AA batteries.

To replace batteries:

1. Locate Battery Pack
2. Replace (4) AA batteries
3. Replace battery tray back to the original location.

Note: Battery pack should be located in a convenient location, which allows for safe operation of the appliance and replacement of batteries, as necessary.

G. Initial Use

When first operated, this appliance may release an odor for the first several hours. This is caused by the curing of the paint and burning off of any oils remaining from manufacturing.

Initial Break-in Procedure:

- The appliance should be run three to four hours continuously on high.
- Provide maximum ventilation by opening windows or doors to allow odors to dissipate.
- Turn the appliance off and allow to cool completely.

10 Lighting Instructions

A. Standing Pilot (Millivolt)

LIGHTING INSTRUCTIONS (STANDING PILOT)

1. **STOP!** Read the safety information label.
2. Turn gas control knob clockwise ↷ to the "OFF" position, set the On/Off Switch, remote control or thermostat to the "OFF" position.
3. Make sure manual gas shutoff valve is in the fully CLOSED position.

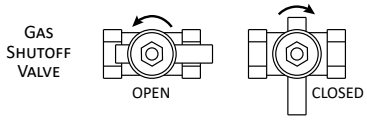

4. Wait five (5) minutes to clear out any gas. Then smell for gas, including near the floor. If you smell gas, STOP! Follow "B" on the safety instructions. If you do not smell gas, go to the next step.
5. Turn manual gas shutoff valve to the fully OPEN position.
6. Turn the gas control knob from the "OFF" position counterclockwise ↶ to the "PILOT" position.

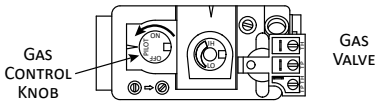

7. Depress and hold the gas control knob in, press and release the piezo ignitor button to light the pilot.
8. Continue to press the gas control knob in for 60 seconds until pilot remains lit. Release the control knob.
   - If the knob does not pop up when released, stop and immediately call your service technician or gas supplier.
   - If the pilot will not stay lit after several tries, turn the gas control knob to "OFF" and call your service technician or gas supplier.

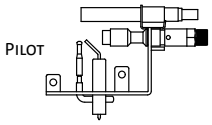

9. Turn gas control knob counterclockwise ↶ to the "ON" position.
10. Turn the On/Off Switch, remote control or thermostat to the "ON" position.
11. If the appliance will not operate, follow the instructions "To Turn Off Gas to Appliance" and call your service technician or gas supplier.

TO TURN OFF GAS TO APPLIANCE

1. Turn On/Off Switch, remote control or thermostat to the "OFF" position.
2. Turn gas control knob clockwise ↷ to the "OFF" position. Do not force.
3. Make sure manual gas shutoff valve is in the fully CLOSED position.
4. If applicable, turn off all electrical power to the appliance.

4665-970 Rev A

FOR YOUR SAFETY READ BEFORE LIGHTING

WARNING: If you do not follow these instructions exactly, a fire or explosion may result causing property damage, personal injury or loss of life.

Standing Pilot Models:

A. This appliance has a pilot which must be lighted by hand. When lighting the pilot, follow these instructions exactly.

Intermittent Pilot Models:

A. This appliance is equipped with an ignition device which automatically lights the pilot. Do not try to light the pilot by hand.

B. BEFORE LIGHTING smell around the appliance area for gas. Be sure to smell next to the floor because some gas is heavier than air and will settle on the floor.

WHAT TO DO IF YOU SMELL GAS

- Do not try to light any appliance.
- Do not touch any electric switch; do not use any phone in your building.
- Immediately call your gas supplier from a neighbor's phone. Follow the gas supplier's instructions.
- If you cannot reach your gas supplier, call the fire department.

C. Use only your hand to push in or turn the gas control knob. Never use tools. If the knob will not push in or turn by hand, do not try to repair it; call a qualified service technician. Force or attempted repair may result in a fire or explosion.

D. Do not use this appliance if any part has been under water. Immediately call a qualified service technician to inspect the appliance and to replace any part of the control system and any gas control which has been under water.

FOR YOUR SAFETY: Do not store or use gasoline or other flammable vapors and liquids in the vicinity of this or any other appliance.

FOR YOUR SAFETY READ BEFORE LIGHTING

4665-974 Rev A

B. Intellifire™ Plus (IPI)

OPERATING INSTRUCTIONS (INTERMITTENT PILOT)

1. **STOP!** Read the safety information label.
2. Set the On/Off Switch, remote control or thermostat to the "OFF" position.
3. This appliance is equipped with an intermittent pilot ignition (IPI) device which automatically lights the pilot. **DO NOT** attempt to light the pilot by hand.
4. Make sure manual gas shutoff valve is in the fully CLOSED position.

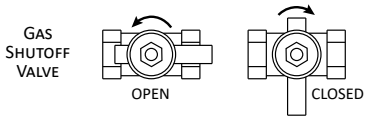

5. Wait five (5) minutes to clear out any gas. Then smell for gas, including near the floor. If you smell gas, STOP! Follow "B" on the safety instructions. If you do not smell gas, go to the next step.

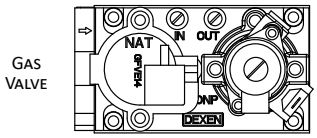

6. Turn manual gas shutoff valve to the fully OPEN position.
7. To light the main burner turn the On/Off Switch, remote control or thermostat to the "ON" position.
8. If the appliance will not operate, follow the instructions "To Turn Off Gas to Appliance" and call your service technician or gas supplier.

TO TURN OFF GAS TO APPLIANCE

1. Turn On/Off Switch, remote control or thermostat to the "OFF" position.
2. Make sure manual gas shutoff valve is in the fully CLOSED position.
3. If applicable, turn off all electrical power to the appliance.

4665-972 Rev A

FOR YOUR SAFETY READ BEFORE LIGHTING

WARNING: If you do not follow these instructions exactly, a fire or explosion may result causing property damage, personal injury or loss of life.

Standing Pilot Models:

A. This appliance has a pilot which must be lighted by hand. When lighting the pilot, follow these instructions exactly.

Intermittent Pilot Models:

A. This appliance is equipped with an ignition device which automatically lights the pilot. Do not try to light the pilot by hand.

B. BEFORE LIGHTING smell around the appliance area for gas. Be sure to smell next to the floor because some gas is heavier than air and will settle on the floor.

WHAT TO DO IF YOU SMELL GAS

- Do not try to light any appliance.
- Do not touch any electric switch; do not use any phone in your building.
- Immediately call your gas supplier from a neighbor's phone. Follow the gas supplier's instructions.
- If you cannot reach your gas supplier, call the fire department.

C. Use only your hand to push in or turn the gas control knob. Never use tools. If the knob will not push in or turn by hand, do not try to repair it; call a qualified service technician. Force or attempted repair may result in a fire or explosion.

D. Do not use this appliance if any part has been under water. Immediately call a qualified service technician to inspect the appliance and to replace any part of the control system and any gas control which has been under water.

FOR YOUR SAFETY: Do not store or use gasoline or other flammable vapors and liquids in the vicinity of this or any other appliance.

FOR YOUR SAFETY READ BEFORE LIGHTING

4665-974 Rev A

11 Maintenance and Service

When properly maintained, your appliance will give you many years of trouble-free service. Contact your dealer to answer questions regarding proper operation, trouble-shooting and service for your appliance.

Visit www.hearthnhome.com to locate a dealer.

We recommend annual service by a qualified service technician.

⚠ CAUTION

Before cleaning make sure the appliance is cool and the power to the unit is turned OFF.

A. Maintenance: Frequency and Tasks

The matrix below is an overview of maintenance tasks to be performed on the appliance. Sections B and C give details and instructions needed to assist the appropriate person in performing the tasks.

Task	Frequency	To be completed by
Clean Firebox/Logs	Seasonally	Homeowner
Remote Control	Seasonally	
Pilot Inspection & Cleaning	Annually	Qualified Service Technician
Log Inspection	Annually	
Firebox Inspection	Annually	
Burner Ignition & Operation	Annually	

B. Maintenance Tasks: Homeowner

Clean Firebox/Logs

Tools Needed: Protective gloves, vacuum cleaner, small soft brush.

- Remove logs carefully, by holding gently at each end. Refer to installation manual for correct log placement.
- Brush logs with soft bristle brush or vacuum with brush attachment.
- Do NOT use cleaning fluid to clean logs or any part of the appliance.
- Vacuum loose particles and dust from the burner, controls and grate.

Note: During normal operation it is common that some sooting may occur on the logs as well as internal panels. This can be more prevalent with propane (LP). Clean soot from the appliance as frequently as necessary to eliminate a build up of soot or permanent discoloration.

Remote Control (If equipped)

Tools Needed: Replacement batteries and remote control instructions.

- Locate remote control transmitter and receiver.
- Verify operation of remote. Refer to remote control operation instructions for proper calibration and setup procedure.
- Replace batteries as needed in remote transmitters and battery-powered receivers.
- Place remote control out of reach of children.

If not using your appliance for an extended period of time (summer months, vacations/trips, etc), to prevent unintended operation:

- Remove batteries from remote controls.

C. Maintenance Tasks: Service Technician

The following tasks must be performed by a qualified service technician.

Pilot Inspection & Cleaning

Tools Needed: Small soft brush, pipe cleaner

- Inspect and remove dust, spider webs and lint.
- Gently run pipe cleaner through air intake port.
- Inspect IPI flame sensing rod for soot, corrosion and deterioration. Polish with a 320 grit Emery Cloth or 3M™ Scotch-Brite Abrasive Hand Pad.

Log Inspection

Tools Needed: Small soft brush

- Inspect for broken, cracked or misplaced logs.
- Gently remove any dust and/or soot build up.

Firebox Inspection

Tools Needed: Protective gloves, sandpaper, steel wool, cloths, mineral spirits, primer and touch-up paint.

- Inspect paint for condition, warped surfaces, corrosion or perforation. Sand and repaint as necessary.
- Replace fireplace if firebox has been perforated.

Burner Ignition and Operation

Tools Needed: Protective gloves, vacuum cleaner, whisk broom, flashlight, voltmeter, indexed drill bit set, and a manometer.

- Verify burner is properly secured.
- Verify pilot assembly is properly aligned with burner.
- Clean off burner top; Inspect burner for plugged ports, corrosion or deterioration. Replace burner if necessary.
- Inspect burner for lifting or other flame problems.
- Verify manifold and inlet pressures. Adjust regulator as required.
- Verify correct main burner orifice size; See Service Parts List for proper orifice sizing.
- Inspect orifice for soot, dirt and corrosion. Clean or replace orifice as necessary.
- Inspect pilot flame pattern and strength. See Section 9, Figure 9.4 for proper pilot flame pattern. Replace pilot orifice spud as necessary.

12 Troubleshooting

A. Frequently Asked Questions

SYMPTOM	SOLUTION
Odor from appliance	When first operated, this appliance may release an odor for the first several hours. This is caused by the burning off of any oils remaining from manufacturing. Odor may also be released from finishing materials and adhesives used around the appliance.
Metallic noise	Noise is caused by metal expanding and contracting as it heats up and cools down, similar to the sound produced by a furnace or heating duct. This noise does not affect the operation or longevity of the appliance.
Wall above appliance feels hot to the touch	The area around, specifically above the firebox opening will become hot to the touch during operation. This is normal, no action is necessary.

With proper installation, operation and maintenance your gas appliance will provide years of trouble-free service. If you do experience a problem, this troubleshooting guide will assist a qualified service technician in the diagnosis of a problem and the corrective action to be taken. This troubleshooting guide should only be used by a qualified service technician.

Contact a dealer to arrange a service call by a qualified service technician.

B. Standing Pilot (millivolt) Control System

SYMPTOM	POSSIBLE CAUSE	CORRECTIVE ACTION
When piezo igniter button pressed, no spark at Pilot Assembly.	Pilot Assembly spark gap incorrect	Replace Pilot Assembly
	Pilot Assembly electrode broken	Replace Pilot Assembly
	Igniter wire not connected	Reconnect igniter wire
	Igniter wire pinched or wet	Move igniter wire if pinched; Keep igniter cable dry
	Faulty igniter wire	Replace igniter wire
	Faulty piezo igniter	Replace piezo igniter
Appliance shuts off during use.	Not enough fresh air for ODS Pilot Assembly to operate properly.	Open window and/or door for ventilation
	Low line pressure	Contact local gas company
	ODS Pilot Assembly partially clogged	Clean ODS Pilot Assembly
	Faulty thermopile	Check wire connections. Output should be 500 mV across TH/TP and TP Terminals with switch off.
	Incoming fresh air flow restricted	Check for bottom riser on glass door, sunken fireplace, excessive lava rock or rock wool densely packed against grate.
Gas odor when control knob is in the OFF position.	Gas leak	Locate and correct all leaks
	Faulty Control Valve	Replace Control Valve
When igniter button is pressed, there is spark at pilot, but no ignition.	Gas supply is off or lacking pressure	Verify that incoming gas line ball valve is open. Verify that inlet pressure reading is within acceptable limits.
	Control knob not in PILOT position or not depressed while in PILOT position.	Turn control knot to PILOT position, depress and hold while sparking.
	Air in gas line when installed	Continue to depress control knob and repeat igniting operation until air is removed.
	Pilot Assembly obstructed	Replace or service Pilot Assembly

C. IntelliFire™ Plus ODS Control System

SYMPTOM	POSSIBLE CAUSE	CORRECTIVE ACTION
Pilot won't light. The igniter/module makes noise, but no spark.	Incorrect wiring	Verify "S" wire (white) for sensor and "I" wire (orange) for igniter are connected to correct terminals on module.
	Loose connection or electrical short in the wiring.	Verify no loose connections or electrical short in wiring from module to pilot assembly. Verify igniter and flame sense wires are not grounding out to chassis, or any other metal object.
	Igniter gap is too large	Verify gap of igniter to thermocouple (natural gas models) or igniter to pilot barrel (propane models). The gap should be approximately .095 in. (2.41 mm) to .135 in. (3.43 mm).
Pilot won't light, there is no noise or spark.	Depleted batteries or batteries installed incorrectly.	Battery power supply voltage must be at least 4.9 volts. If less than 4.9 volts, replace batteries.
	A shorted or loose connection in wiring or wiring harness.	Verify wiring harness securely connected to control module. Verify pilot assembly wiring to control module. Verify continuity of each wire in wiring harness. Replace any damaged components.
	Control Module not grounded	Verify black ground wire from control module wire harness is grounded to metal chassis of appliance.
Pilot sparks, but pilot will not light.	Gas supply is off or lacking pressure	Verify that incoming gas line ball valve is open. Verify that inlet pressure reading is within acceptable limits.
	Igniter gap is too large	Verify gap of igniter to thermocouple (natural gas models) or igniter to pilot barrel (propane models). The gap should be approximately .095 in. (2.41 mm) to .135 in. (3.43 mm).
	Control Module not grounded	Verify black ground wire from control module wire harness is grounded to metal chassis of appliance.
	Pilot solenoid (orange) voltage is out of spec.	Verify that 1.5 to 1.8 VDC is supplied to pilot solenoid (orange) from control module. If below 1.5 volts, replace module. If 1.5 volts or greater, replace valve.
Shortened battery life	Thermopile wires hooked up backwards	Verify white and red wires from thermopile are in correct location on control module.
	Using flame adjustment feature frequently on the RC300.	Battery life will be shortened if the flame adjustment feature is used frequently on the RC300 remote control. Reduce the number of times flame height is adjusted to increase battery life.

IntelliFire™ Plus ODS Control System - Continued

SYMPTOM	POSSIBLE CAUSE	CORRECTIVE ACTION
Pilot lights but continues to spark, and main burner will not ignite.	A shorted or loose connection from thermocouple or thermocouple module.	Verify no loose connections or electrical short in wiring from module to pilot assembly. Verify igniter and flame sense wires are not grounding out to chassis, or any other metal object.
	Poor flame rectification or contaminated flame sensing rod.	Verify correct pilot orifice is installed and gas inlet is set to pressure specifications. Check pilot for soot. Clean if necessary. Polish flame sensing rod with fine steel wool to remove any contaminants that may have accumulated on flame sensing rod.
	Control Module not grounded	Verify black ground wire from control module wire harness is grounded to metal chassis of appliance.
	Damaged pilot assembly or contaminated thermocouple.	Verify connection from thermocouple to thermocouple module, check thermocouple for contaminants. Clean if necessary. Replace pilot if any damage is detected.

Contact your dealer for additional information regarding operating and troubleshooting.

Visit www.hearthnhome.com to locate a dealer

13 Service Parts

A. Service Parts

MONESSEN **Service Parts** **NB18NV-B / NB18PV-B**

Beginning Manufacturing Date:Sept 2025
Ending Manufacturing Date: Active

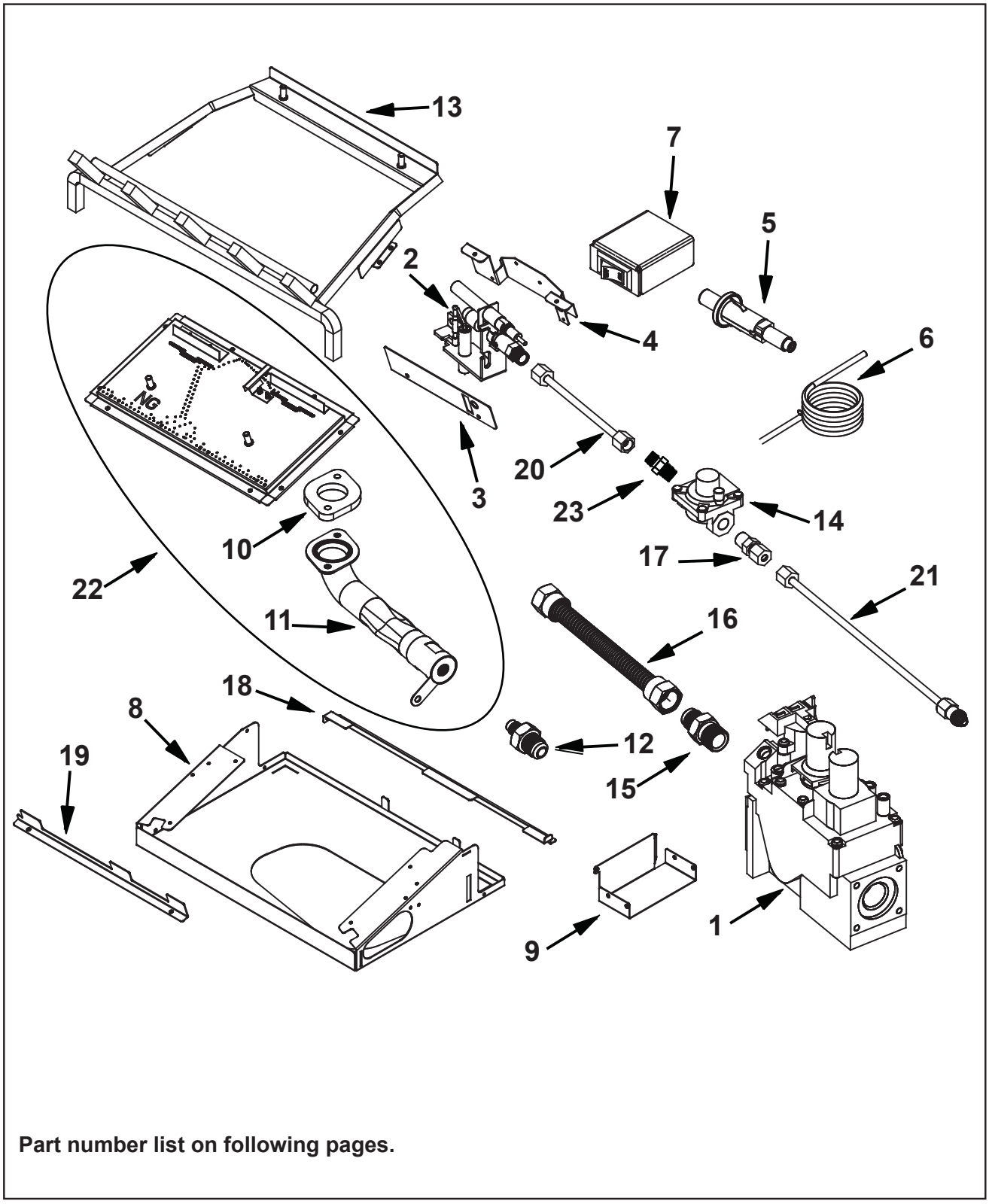

Part number list on following pages.

Beginning Manufacturing Date:Sept 2025
Ending Manufacturing Date: Active

IMPORTANT: THIS IS DATED INFORMATION. Parts must be ordered from a dealer or distributor. **Hearth and Home Technologies does not sell directly to consumers**. Provide model number and serial number when requesting service parts from your dealer or distributor.

ITEM	DESCRIPTION	COMMENTS	PART NUMBER	Stocked at Depot
1	NG Millivolt Control Valve		SRV14D0467	**Y**
	LP Millivolt Control Valve		SRV14D0468	**Y**
2	NG Pilot Assembly		SRV14D0473	**Y**
	LP Pilot Assembly		SRV14D0477	**Y**
3	Pilot Shield		SRV4663-121	
4	Pilot Bracket		SRV4663-120	
5	Piezo Ignitor		SRV14D0503	**Y**
6	Piezo Wire		20303256K	**Y**
7	Switch Assembly		SRV4660-011	**Y**
8	Chassis		SRV4663-140	
9	Valve Bracket		SRV4663-145	
10	Venturi Gasket		SRV4099-191	
11	NG Venturi w/Shutter		SRV4018-075	
	LP Venturi w/Shutter		SRV4018-087	
12	NG Orifice Flare		SRV4018-387	
	LP Orifice Flare		SRV4018-373	
13	Grate Assembly		SRV4663-043	
14	Pilot Regulator		SRV4018-468	**Y**
15	Male Connector		SRV303-315	
16	Flex Line		SRV4018-082	
17	Fitting 3/16 Tube X 1/8 MPT		SRV20H0109	**Y**
18	Grate Support		SRV4663-148	
19	Ash Lip		SRV4663-155	
20	NG Tubing, Regulator to Pilot		SRV4018-130	
21	NG Tubing, Valve to Regulator		SRV4018-127	
	LP Tubing, Valve to Pilot		SRV4018-128	
22	NG Burner Kit		SRV4663-022	**Y**
	LP Burner Kit		SRV4663-023	**Y**
23	Fitting 3/16 Tube X 1/8 MPT (No nut or ferrule)		SRV4121-479	
	Lava Rock	2.5 lbs	SRV00F0540	**Y**
	Rock Wool	2 grams	SRV81D2011	

Beginning Manufacturing Date:Sept 2025
Ending Manufacturing Date: Active

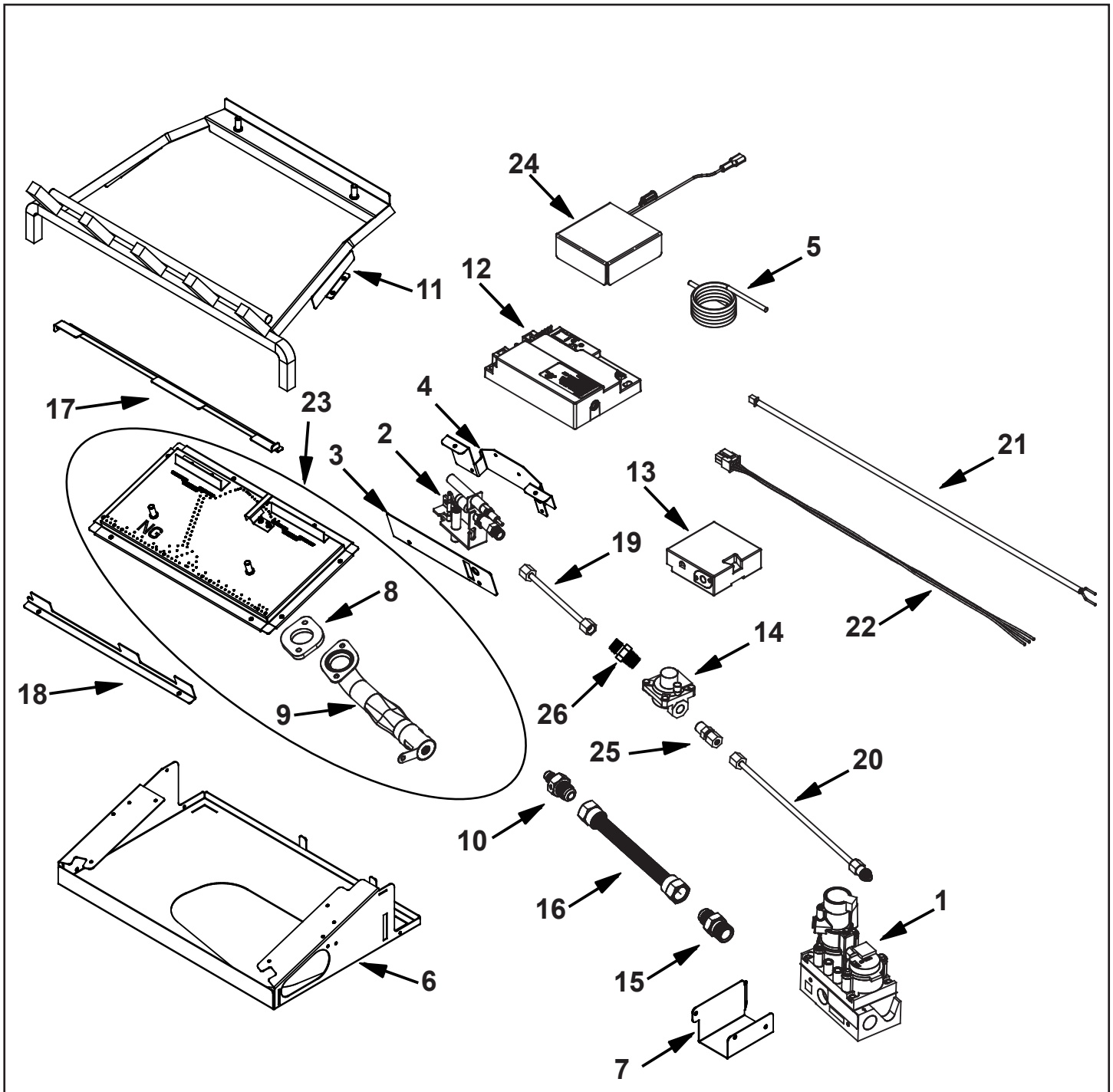

Part number list on following pages.

Beginning Manufacturing Date:Sept 2025
Ending Manufacturing Date: Active

IMPORTANT: THIS IS DATED INFORMATION. Parts must be ordered from a dealer or distributor. **Hearth and Home Technologies does not sell directly to consumers**. Provide model number and serial number when requesting service parts from your dealer or distributor.

ITEM	DESCRIPTION	COMMENTS	PART NUMBER	Stocked at Depot
1	NG IPI Control Valve		SRV4018-047	**Y**
	LP IPI Control Valve		SRV4018-048	**Y**
2	NG Pilot Assembly		SRV14D0473	**Y**
	LP Pilot Assembly		SRV14D0477	**Y**
3	Pilot Shield		SRV4663-121	
4	Pilot Bracket		SRV4663-120	
5	Piezo Wire		20303256K	**Y**
6	Chassis		SRV4663-140	
7	Valve Bracket		SRV4663-144	
8	Venturi Gasket		SRV4099-191	
9	NG Venturi w/Shutter		SRV4018-075	
	LP Venturi w/Shutter		SRV4018-087	
10	NG Orifice Flare		SRV4018-387	
	LP Orifice Flare		SRV4018-373	
11	Grate Assembly		SRV4663-043	
12	Control Module		SRV4018-069	**Y**
13	Thermocouple Module		SRV20303179	
14	Pilot Regulator (NG Only)		SRV4018-468	
15	Male Connector		SRV303-315	
16	Flex Line		SRV4018-082	
17	Grate Support		SRV4663-148	
18	Ash Lip		SRV4663-155	
19	NG Tubing, Regulator to Pilot		SRV4018-130	
20	NG Tubing, Regulator to Valve		SRV4018-127	
	LP Tubing, Pilot to Valve		SRV4018-128	
21	Wire Assembly		SRV4604-304	**Y**
22	Wire Thermocouple		SRV20301890	**Y**
23	NG Burner Kit		SRV4663-023	**Y**
	LP Burner Kit		SRV4663-022	**Y**
24	Battery Pack Assembly		SRV4665-054	**Y**
25	Fitting 3/16 Tube x 1/8 MPT		SRV20H0109	**Y**
26	Fitting 3/16 Tube x 1/8 MPT (No nut or ferrule)		SRV4121-479	
	Remote Assembly		SRV4018-149	
	Lava Rock	2.5 lbs	SRV00F0540	**Y**
	Rock Wool	2 grams	SRV81D2011	

Beginning Manufacturing Date:Sept 2025
Ending Manufacturing Date: Active

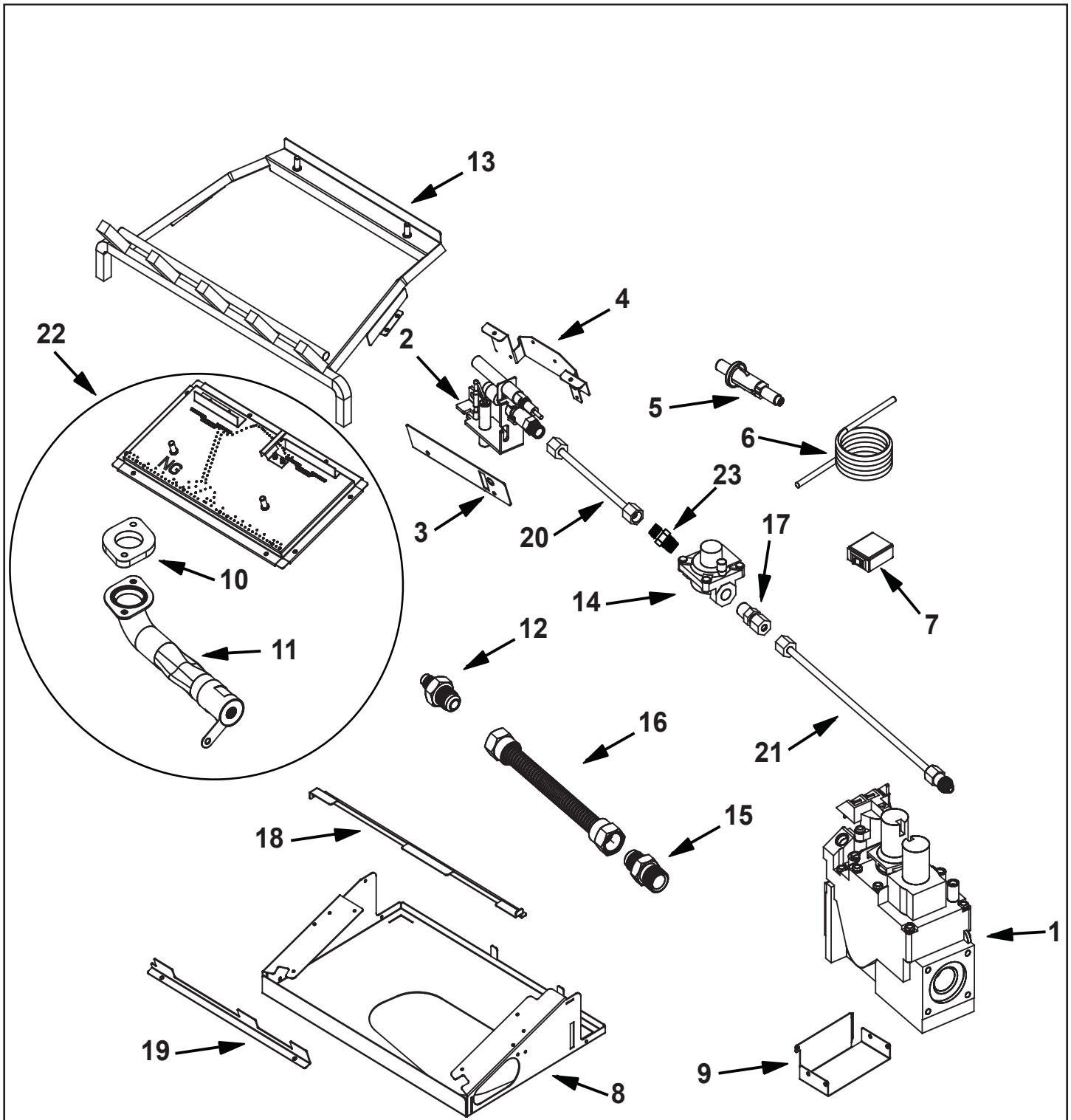

Part number list on following pages.

Beginning Manufacturing Date:Sept 2025
Ending Manufacturing Date: Active

IMPORTANT: THIS IS DATED INFORMATION. Parts must be ordered from a dealer or distributor. **Hearth and Home Technologies does not sell directly to consumers**. Provide model number and serial number when requesting service parts from your dealer or distributor.

ITEM	DESCRIPTION	COMMENTS	PART NUMBER	Stocked at Depot
1	NG Millivolt Control Valve		SRV14D0467	**Y**
	LP Millivolt Control Valve		SRV14D0468	**Y**
2	NG Pilot Assembly		SRV14D0473	**Y**
	LP Pilot Assembly		SRV14D0477	**Y**
3	Pilot Shield		SRV4663-121	
4	Pilot Bracket		SRV4663-120	
5	Piezo Ignitor		SRV14D0503	**Y**
6	Piezo Wire		SRV00K0632	**Y**
7	Switch Assembly		SRV4660-011	**Y**
8	Chassis		SRV4664-140	
9	Valve Bracket		SRV4663-145	
10	Venturi Gasket		SRV4099-191	
11	NG Venturi w/Shutter		SRV4018-075	
	LP Venturi w/Shutter		SRV4018-087	
12	NG Orifice Flare		SRV4018-392	
	LP Orifice Flare		SRV4018-350	
13	Grate Assembly		SRV4664-043	
14	Pilot Regulator		SRV4018-468	**Y**
15	Male Connector		SRV303-315	
16	Flex Line		SRV4018-082	
17	Fitting 3/16 Tube X 1/8 MPT		SRV20H0109	**Y**
18	Grate Support		SRV4664-148	
19	Ash Lip		SRV4664-155	
20	NG Tubing, Regulator to Pilot		SRV4018-130	
21	NG Tubing, Valve to Regulator		SRV4018-127	
	LP Tubing, Valve to Pilot		SRV4018-128	
22	NG Burner Kit		SRV4664-023	**Y**
	LP Burner Kit		SRV4664-022	**Y**
23	Fitting 3/16 Tube X 1/8 MPT (No nut or ferrule)		SRV4121-479	
	Lava Rock	2.5 lbs	SRV00F0540	**Y**
	Rock Wool	3 grams	SRV59D0111	

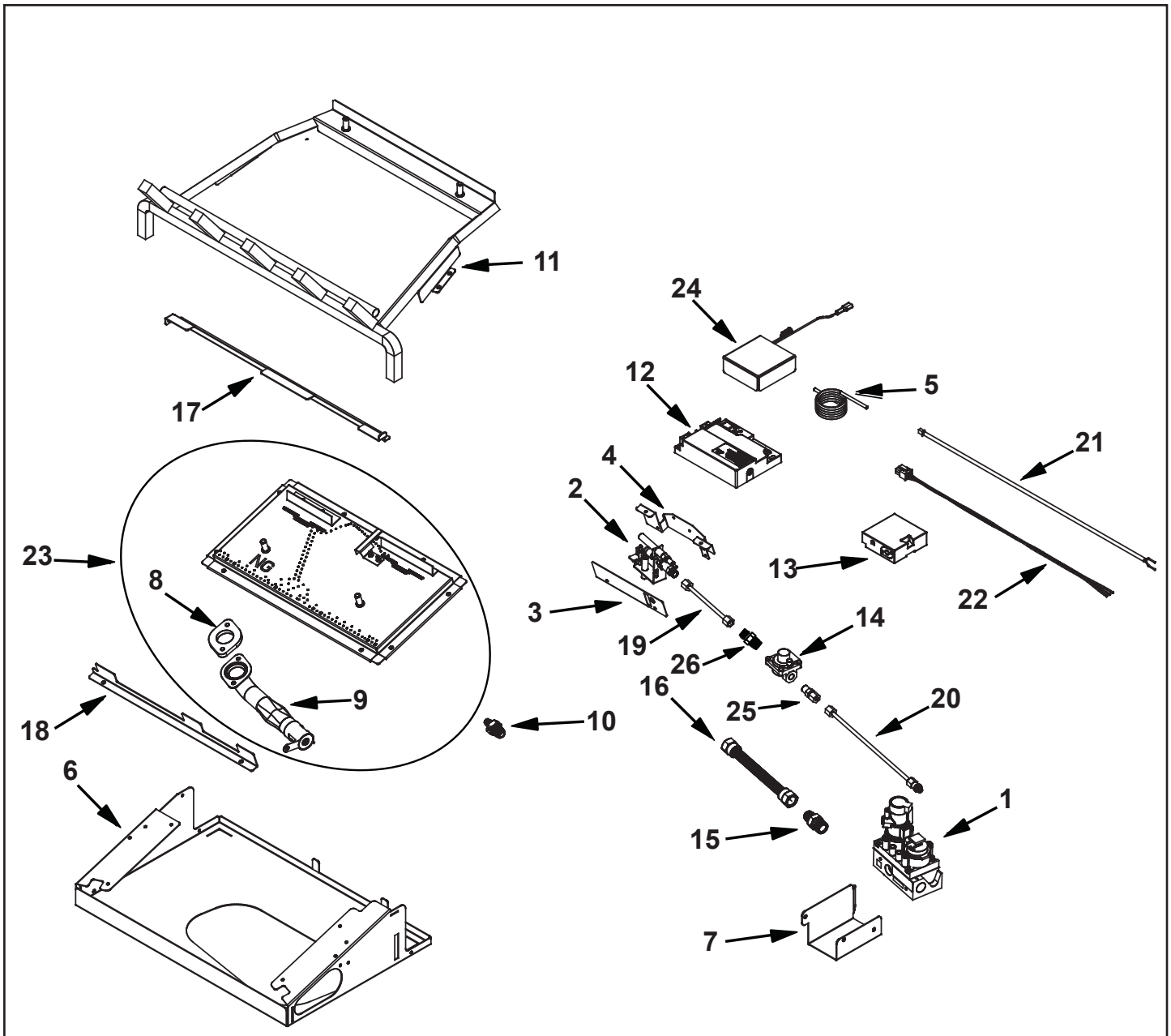

Part number list on following pages.

Beginning Manufacturing Date:Sept 2025
Ending Manufacturing Date: Active

IMPORTANT: THIS IS DATED INFORMATION. Parts must be ordered from a dealer or distributor. **Hearth and Home Technologies does not sell directly to consumers**. Provide model number and serial number when requesting service parts from your dealer or distributor.

ITEM	DESCRIPTION	COMMENTS	PART NUMBER	Stocked at Depot
1	NG IPI Control Valve		SRV4018-047	**Y**
	LP IPI Control Valve		SRV4018-048	**Y**
2	NG Pilot Assembly		SRV14D0473	**Y**
	LP Pilot Assembly		SRV14D0477	**Y**
3	Pilot Shield		SRV4663-121	
4	Pilot Bracket		SRV4663-120	
5	Piezo Wire		20303256K	**Y**
6	Chassis		SRV4664-140	
7	Valve Bracket		SRV4663-144	
8	Venturi Gasket		SRV4099-191	
9	NG Venturi w/Shutter		SRV4018-075	
	LP Venturi w/Shutter		SRV4018-087	
10	NG Orifice Flare		SRV4018-392	
	LP Orifice Flare		SRV4018-350	
11	Grate Assembly		SRV4664-043	
12	Control Module		SRV4018-069	**Y**
13	Thermocouple Module		SRV20303179	
14	Pilot Regulator (NG Only)		SRV4018-468	
15	Male Connector		SRV303-315	
16	Flex Line		SRV4018-082	
17	Grate Support		SRV4664-148	
18	Ash Lip		SRV4664-155	
19	NG Tubing, Regulator to Pilot		SRV4018-130	
20	NG Tubing, Regulator to Valve		SRV4018-127	
	LP Tubing, Pilot to Valve		SRV4018-128	
21	Wire Assembly		SRV4604-304	**Y**
22	Wire Thermocouple		SRV20301890	**Y**
23	NG Burner Kit		SRV4664-023	**Y**
	LP Burner Kit		SRV4664-022	**Y**
24	Battery Pack Assembly		SRV4665-054	**Y**
25	Fitting 3/16 Tube x 1/8 MPT		SRV20H0109	**Y**
26	Fitting 3/16 Tube x 1/8 MPT (No nut or ferrule)		SRV4121-479	
	Remote Assembly		SRV4018-149	
	Lava Rock	2.5 lbs	SRV00F0540	**Y**
	Rock Wool	3 grams	SRV59D0111	

14 Reference Materials

A. Accessories

Note: This appliance REQUIRES the use of one of the decorative logs sets listed below.

Decorative Log Sets for use with 18” Natural Blaze Burner

- BO18-R 18” Berkley Oak Log Set
- BO18-F 18” Berkley Oak Log Set (Fiber)
- SC18-R 18” Stoney Creek Log Set
- HO18-R 18” Highland Oak Log Set
- BC18-R 18” Beach Comber Log Set

Decorative Log Sets for use with 24” Natural Blaze Burner

- BO24-R 24” Berkley Oak Log Set
- BO24-F 24” Berkley Oak Log Set (Fiber)
- SC24-R 24” Stoney Creek Log Set
- HO24-R 24” Highland Oak Log Set
- BC24-R 24” Beach Comber Log Set
- BO30-R 30” Berkley Oak Log Set
- BO30-F 30” Berkley Oak Log Set (Fiber)
- SC30-R 30” Stoney Creek Log Set
- HO30-R 30” Highland Oak Log Set
- BC30-R 30” Beach Comber Log Set

Media

- VR1000A Volcanic Rock

Controls - Standing Pilot Models (Millivolt)

- RCB Remote Control (Battery Powered)
- RRCM Remote Receiver Insulated Cover
- TSST Touch Screen Hand-held Thermostat
- TS Thermostat Sensor
- HILOKTN Remote Control with Variable Flame (NG)
- HILOKTP Remote Control with Variable Flame (Propane)

Power Supply

- ACCK-IPIP 6VDC Transformer (IPI Models Only)

Options & Accessories

- C-CLAMP Damper Clamp (Carton of 6, required for vented installations)
- CABL Flat Black Adjustable Hood (Adjusts 28” - 48”)

B. Contact Information

Hearth & Home Technologies
7571 215th Street West, Lakeville, MN 55044
www.hearthnhome.com

Please contact your dealer with any questions or concerns.
For the location of your nearest dealer,
please visit www.hearthnhome.com

- NOTES -

NOTICE

DO NOT DISCARD THIS MANUAL



Important operating and maintenance instructions included.

Read, understand and follow these instructions for safe installation and operation.

Leave this manual with party responsible for use and operation.



This product may be covered by one or more of the following patents: (United States) 7077122, 7074035, 7234932, 7322819, 7422011, 7726300, 8147240, 9625149 or other U.S. and foreign patents pending.

2000-945F

Printed in U.S.A. - Copyright 2016