MONESSEN
LOVE AT FIRST LIGHT

Lo-Rider

42" Vent Free Gas Firebox

Scan QR code for installation manual for final dimensions and requirements.

FRAMING DIMENSIONS	FRONT WIDTH	BACK WIDTH	HEIGHT	DEPTH	VIEWING AREA
	48-1/2"	48-1/2"	34-1/4"	22-3/4"	42" x 30"

FRAMING DIMENSIONS

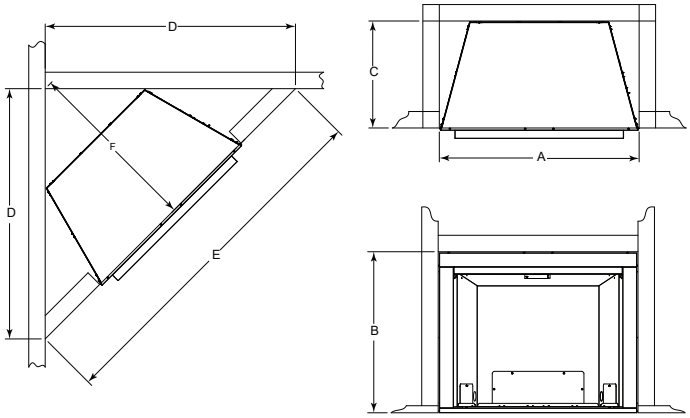

A	B	C	D	E	F
48-1/2" (1232 mm)	34-1/4" (870mm)	22-3/4" (578mm)	57-1/2" (1461mm))	81-3/8" (2067mm)	33-1/2" (851mm)

MINIMUM HEARTH DIMENSIONS

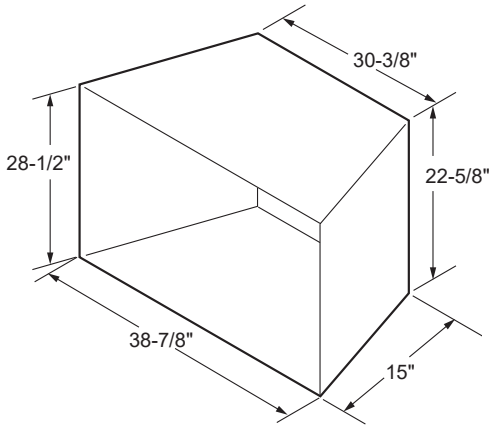

Dimensions shown are with concrete liner installed.

ACTUAL DIMENSIONS	FRONT WIDTH	BACK WIDTH	HEIGHT	DEPTH	VIEWING AREA
	48"	35-1/2"	34"	23"	42" x 30"

TOP VIEW

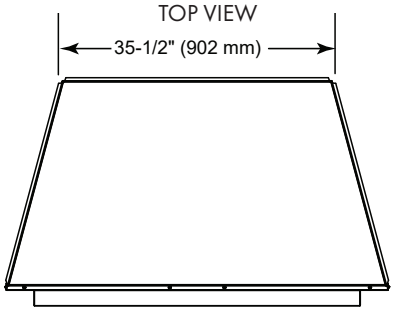

LEFT SIDE

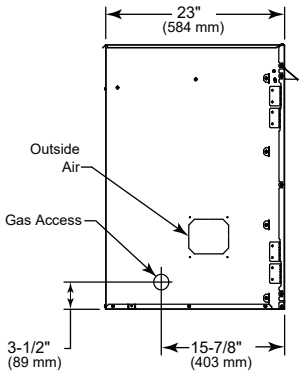

FRONT VIEW

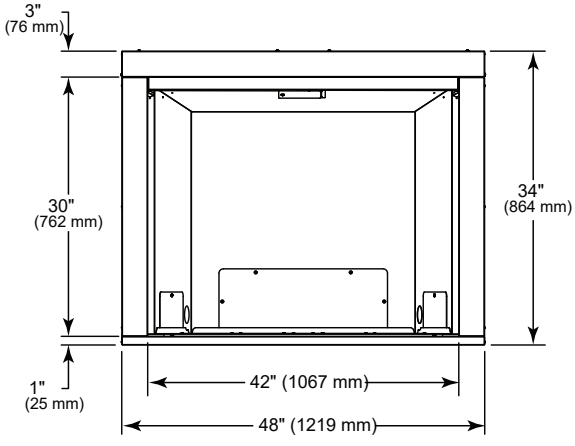

RIGHT SIDE

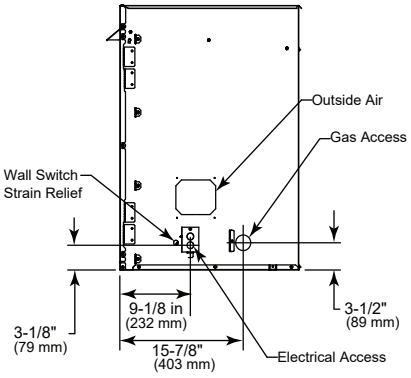

COMBUSTIBLE MANTEL

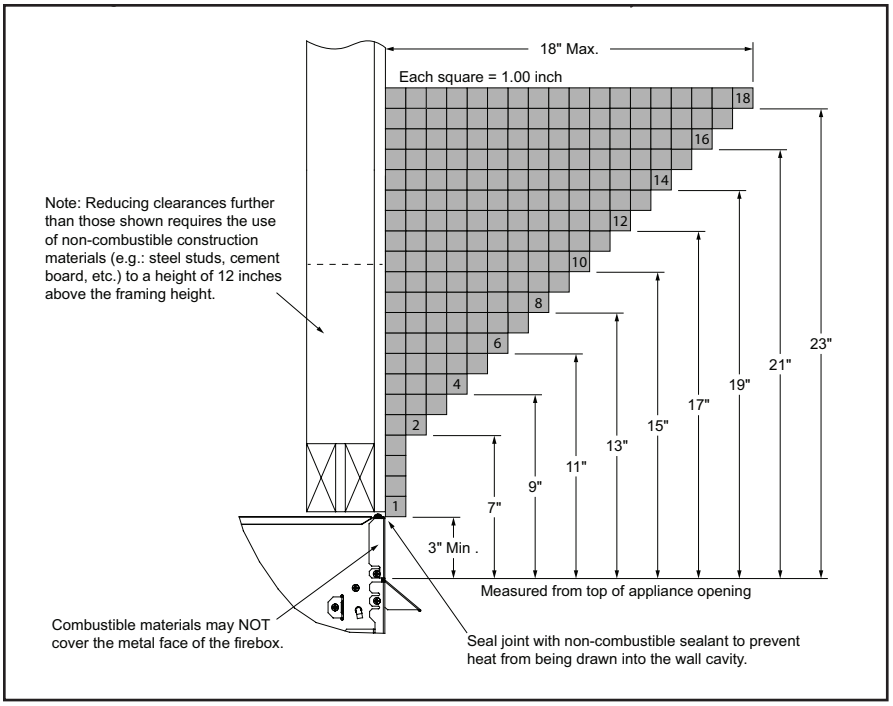

COMBUSTIBLE MANTEL LEG

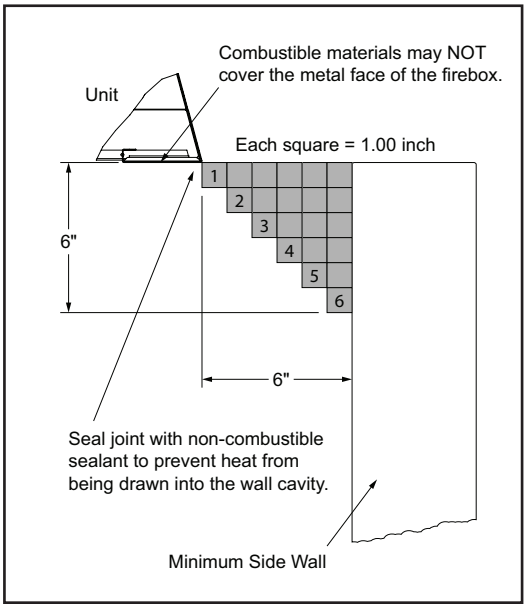

NON-COMBUSTIBLE MANTEL

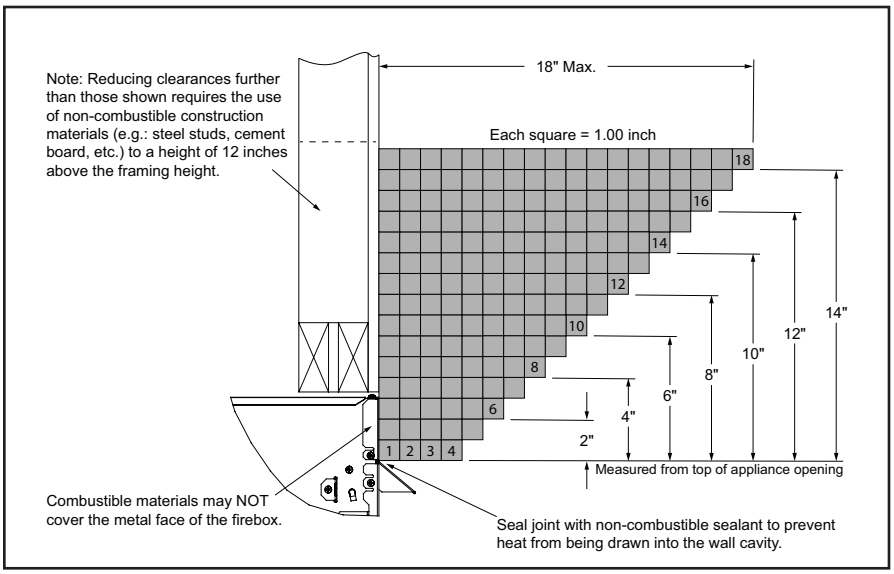

NON-COMBUSTIBLE MANTEL LEG

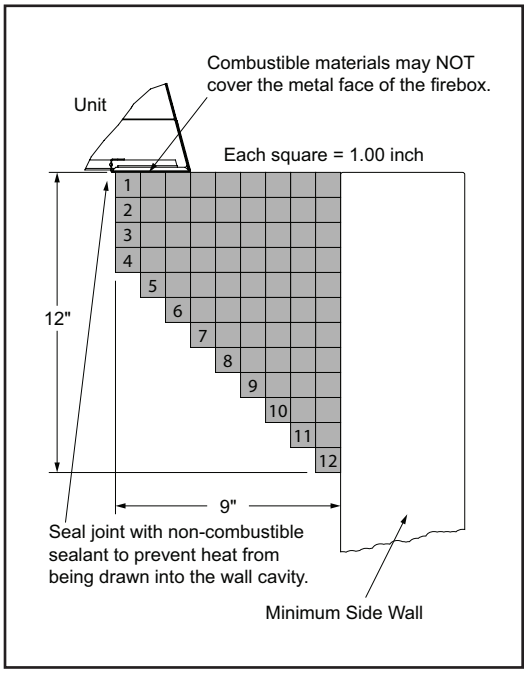

CLEARANCES TO COMBUSTIBLES

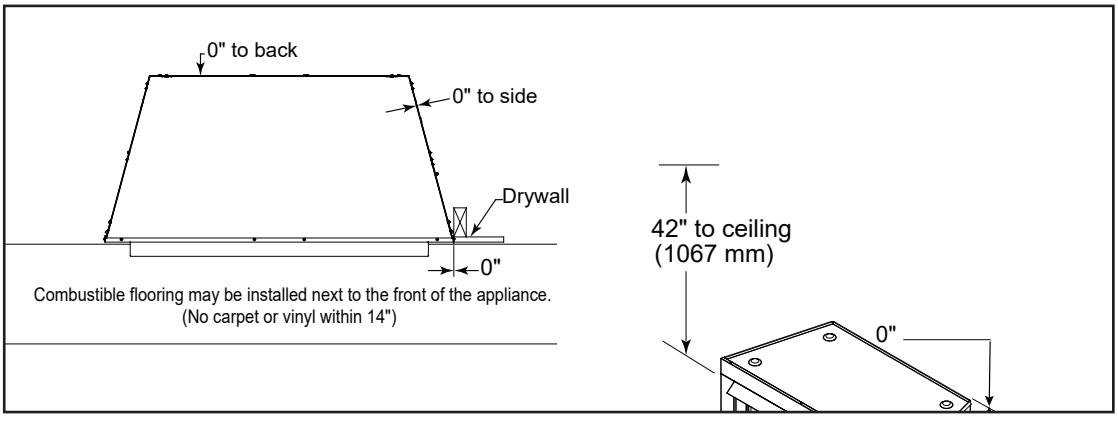

PRODUCT LISTING CODE	
US	ANSI Z223.1 / NFPA54 CSA / ANSI Z21.11
c UL us LISTED	UL Certified

Product information provided is not complete and is subject to change without notice. Product installation must adhere strictly to instructions accompanying product to avoid risk of fire and potential injury.

A brand of Hearth & Home Technologies™ Inc.
7571 215th Street West | Lakeville, MN 55044
888-427-3973 | monessenhearth.com